ROITHNER LASERTECHNIK
Wiedner Hauptstraße 76, A-1040 Vienna, Austria
Tel.: ++43 1 586 52 43-0, Fax -44, office@roithner-laser.com

QL85J6S-A/B/C-L

♦OVERVIEW

QL85J6S-A/B/C-L is a MOCVD grown 850nm band *AlGaAs* laser diode with quantum well structure. It's an attractive light source, with a typical light output power of 40mW for industrial optical module and sensor applications.

♦APPLICATION

- Sensor
- Industrial Optical Module

♦FEATURES

- Visible Light Output : λp = 850 nm
- Optical Power Output : 40mW CW
- Package Type : TO-18 (5.6mmϕ)
- Built-in Photo Diode for Monitoring Laser Diode

♦ELECTRICAL CONNECTION

Bottom View

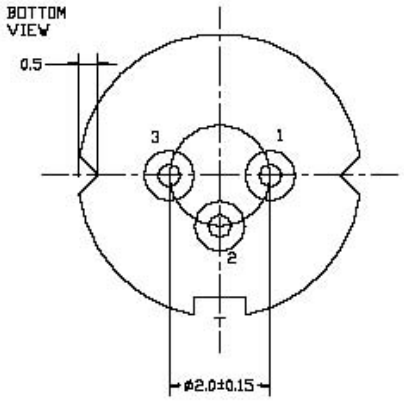

Pin Configuration

A	LD cathode, PD anode (Fig. 1)
B	LD , PD anode (Fig. 2)
C	LD anode, PD cathode (Fig. 3)

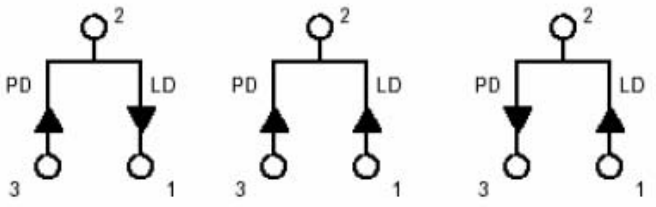

Fig. 1 **QL85J6SA-L**

Fig. 2 **QL85J6SB-L**

Fig. 3 **QL85J6SC-L**

ROITHNER LASERTECHNIK
Wiedner Hauptstraße 76, A-1040 Vienna, Austria
Tel.: ++43 1 586 52 43-0, Fax -44, office@roithner-laser.com

♦ABSOLUTE MAXIMUM RATING at Tc=25°C

Items	Symbols	Values	Unit
Optical Output Power	P	42	mW
Laser Diode Reverse Voltage	V	2	V
Photo Diode Reverse Voltage	V	30	V
Operating Temperature	Topr	–10 ~ +60	°C
Storage Temperature	Tstg	–40 ~ +85	°C

♦ELECTRICAL and OPTICAL CHARACTERISTICS at Tc=25°C

Items	Symbols	Min.	Typ.	Max.	Unit	Condition
Optical Output Power	Po	-	40	-	mW	-
Threshold Current	Ith	-	30	45	mA	-
Operating Current	Iop	70	95	110	mA	Po=40mW
Slope Efficiency	SE	0.3	0.6	0.9	mW/mA	20~40 mW
Operating Voltage	Vop	-	2.0	2.5	V	Po=40mW
Lasing Wavelength	λp	845	855	865	nm	Po=40mW
Beam Divergence	θ∥	7	9	12	deg	Po=40mW
	θ⊥	25	32	40	deg	Po=40mW
Beam Angle	Δθ∥	-	-	±2	deg	Po=40mW
	Δθ⊥	-	-	±3	deg	Po=40mW
Monitor Current	Im	0.05	0.2	0.5	mA	Po=40mW
Astigmatism	As	-	-	15	μm	
Optical Distance	ΔX, ΔY, ΔZ	-	-	±60	μm	

NOTICE : QL85J6S-A/B/C-L to be operated on APC

The above product specifications are subject to change without notice.

ROITHNER LASERTECHNIK
Wiedner Hauptstraße 76, A-1040 Vienna, Austria
Tel.: ++43 1 586 52 43-0, Fax -44, office@roithner-laser.com

♦PACKAGE DIMENSION

