R-GAGE® Q240RA-AF2 Sensor

Datasheet

Radar-Based Dual-Zone Narrow-Beam Sensors for Detection of Moving and Stationary Targets

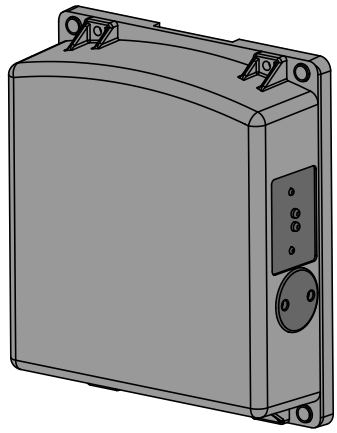

- FMCW (true-presence) radar detects moving and stationary objects
- Narrow 11° × 13° beam pattern
- Two independent, adjustable sensing zones detect objects up to 40 meters away (131.2 ft)
- Easy setup and configuration of range, sensitivity, and output with simple DIP switches
- Sensing functions are unaffected by wind, falling rain or snow, fog, humidity, air temperatures, or light
- Sensor operates in Industrial, Scientific, and Medical (ISM) telecommunication band
- Rugged IP67 housing withstands harsh environments

Protected by US patents

Model	Sensing Range	Connection	Supply Voltage	Telecom Approval	Output
Q240RA-US-AF2Q	Two independent sensing zones; 1 to 40+ meters (131 ft)	5-pin M12 quick disconnect	12 to 30 V dc	Telecom approved for US and Canada	DIP-switch-selectable NPN or PNP; N.O. or N.C.
Q240RA-EU-AF2Q				Telecom approved for Europe, UK, Australia, and New Zealand	
Q240RA-CN-AF2Q				Telecom approved for China	

CAUTION: Make No Modifications to this Product

Any modifications to this product not expressly approved by Banner Engineering could void the user's authority to operate the product. Contact Banner Engineering for more information.

WARNING: Not To Be Used for Personnel Protection

Never use this device as a sensing device for personnel protection. Doing so could lead to serious injury or death. This device does not include the self-checking redundant circuitry necessary to allow its use in personnel safety applications. A sensor failure or malfunction can cause either an energized or de-energized sensor output condition.

Overview

The R-GAGE sensor emits a well-defined beam of high-frequency radio waves from an internal antenna. Some of this emitted energy is reflected back to the receiving antenna. Signal processing electronics determine the distance from the sensor to the object based on the time delay of the return signal. The sensor can be configured to two independent sensing zones.

The two sensing zones are factory pre-set to default distances; they can be reconfigured for different distances using the DIP switches on the side of the sensor. The sensor is plug-in ready for immediate operation.

The sensitivity is precalibrated at the factory, assuming that the sensing field will be clear of obstacles. The sensitivity can be adjusted using the DIP switches on the side of the sensor.

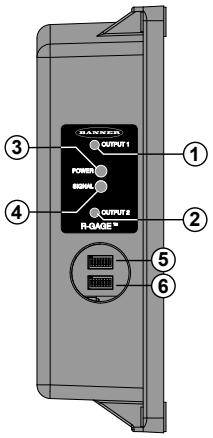

Figure 1. R-GAGE features

1. Output LEDs: Yellow (output 1 energized); Red (configuration)
2. Output LEDs: Yellow (output 2 energized); Red (configuration)
3. Power LED: Green (power ON)
4. Signal Strength LED: Red (flashes in proportion to the signal strength)
5. DIP switch row A
6. DIP switch row B

Access the DIP switches behind the threaded cap on the sensor side

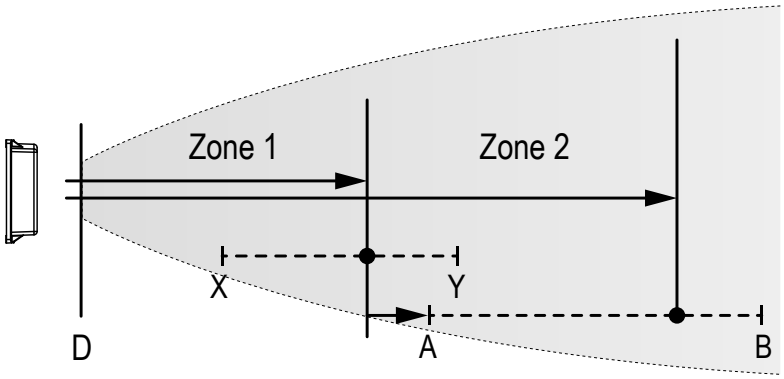

Figure 2. R-GAGE setpoint distances

		EU, CN Model	US Model
X	Minimum Zone 1 setpoint distance	2 m (6.6 ft)	3.5 m (11.5 ft)
Y	Maximum Zone 1 setpoint distance	30 m (98.4 ft)	30 m (98.4 ft)
A	Minimum Zone 2 (offset from Zone 1: 2 m to 25 m)	4 m (13.1 ft)	5.5 m (18.0 ft)
B	Maximum Zone 2 (offset from Zone 1: 2 m to 25 m)	55 m (180.4 ft)	55 m (180.4 ft)
D	Dead Zone[1]		

Sensor Configuration

The sensitivity and output configuration can be selected via the DIP switches on the side of the sensor. Use the included spanner to open the screw-off cover on the side of the sensor and access the DIP switches.

Important: Tighten the DIP switch cover a full quarter turn after contact to maintain the watertight seal.

DIP Switch Functions

Switches	Function
A1, A2, A3, A4	Zone 1 Distance (detects objects from sensor face to this point)
A5, A6, A7	Zone 2 Distance, Offset from Zone 1

[1] Typical dead zone: 0.4 m (1.3 ft) for moving and 1.0 m (3.3 ft) for stationary targets, but varies with target reflectivity.

Switches	Function
A8	Polarity
B1, B2, B3	Sensitivity (higher sensitivity sees weaker objects and has a larger beam pattern)
B4, B5, B6	Response Speed
B7	Normally Open/Normally Closed output functionality
B8	Not Used

DIP switch 1 is on the left and DIP switch 8 is on the right.

Distance Settings

Zone 1 Distance					
A1	A2	A3	A4	Distance	
				EU, CN	US
0	0	0	0	2 m (6.6 ft)	3.5 m (11.5 ft)
0	0	0	1	2.5 m (8.2 ft)	4 m (13.1 ft)
0	0	1	0	3 m (9.8 ft)	4.5 m (14.8 ft)
0	0	1	1	3.5 m (11.5 ft)	5 m (16.4 ft)
0	1	0	0	4 m (13.1 ft)	5.5 m (18.0 ft)
0	1	0	1	5 m (16.4 ft)	6 m (19.7 ft)
0	1	1	0	6 m (19.7 ft)	6.5 m (21.3 ft)
0	1	1	1	7 m (23.0 ft)	7 m (23.0 ft)
1*	0*	0*	0*	8 m (26.2 ft)	8 m (26.2 ft)
1	0	0	1	10 m (32.8 ft)	10 m (32.8 ft)
1	0	1	0	12 m (39.4 ft)	12 m (39.4 ft)
1	0	1	1	14 m (45.9 ft)	14 m (45.9 ft)
1	1	0	0	16 m (52.5 ft)	16 m (52.5 ft)
1	1	0	1	20 m (65.6 ft)	20 m (65.6 ft)
1	1	1	0	25 m (82.0 ft)	25 m (82.0 ft)
1	1	1	1	30 m (98.4 ft)	30 m (98.4 ft)

* Default settings

Zone 2 Distance Offset from Zone 1			
A5	A6	A7	Offset
0	0	0	2 m (6.6 ft)
0	0	1	4 m (13.1 ft)
0	1	0	6 m (19.7 ft)
0*	1*	1*	8 m (26.2 ft)
1	0	0	10 m (32.8 ft)
1	0	1	15 m (49.2 ft)
1	1	0	20 m (65.6 ft)
1	1	1	25 m (82.0 ft)

NOTE: Highest sensitivity is achieved only if the sensing distance is 36 m (118.1 ft) or less.

Sensitivity Selection

B1	B2	B3	Sensitivity
0	0	0	8 (Highest)
0	0	1	7...
0	1	0	6 (High)
0 **	1 **	1 **	5...
1 *	0 *	0 *	4 (Medium)
1	0	1	3...
1	1	0	2 (Low)
1	1	1	1 (Lowest)

* Default settings for CN and US models

**Default settings for EU model

NOTE: Operation at a high sensitivity not guaranteed for a zone set beyond 45 m (147.6 ft).

Output Configuration

A8	NPN / PNP
0*	NPN
1	PNP

B7	Normally Open / Closed
0*	NO
1	NC

* Default settings

Response Speed

B4	B5	B6	ON Total (ms)	OFF Total (ms)	Total (ms)
0	0	0	15	15	30
0	0	1	30	70	100
0	1	0	30	120	150
0*	1*	1*	50	300	350
1	0	0	50	600	650
1	0	1	30	1000	1030
1	1	0	120	600	720
1	1	1	120	6000	6120

* Default settings

Specifications

Range
The sensor is able to detect a proper object (see Detectable Objects) from 1 to 40+ m (3.3 to 131.2+ ft), depending on target

Detectable Objects
Objects containing metal, water, or similar high-dielectric materials

Operating Principle
Frequency modulated continuous-wave (FMCW) radar

Operating Frequency
US Models: 24.075–24.175 GHz, ISM Band
EU, CN Models: 24.050–24.250 GHz, ISM Band

Maximum Output Power
US, CN Models: ERP: 3.3 mW, 5 dBm, EIRP: 358 mW, 25.5 dBm
EU Models: ERP: 0.9 mW, -0.5 dBm, EIRP: 100 mW, 20 dBm

Supply Voltage
12 to 30 V dc, less than 100 mA, exclusive of load

Supply Protection Circuitry
Protected against reverse polarity and transient overvoltages

Delay at Power-up
Less than 2 seconds

Output Configuration
DIP switch A8 selects Dual NPN (default) or PNP; DIP switch B7 selects N.O. (default) or N.C. operation; 150mA each
· Zone 1 output: white wire
· Zone 2 output: black wire

Output Protection
Protected against short circuit conditions

Response Time
DIP-switch-configurable ON/OFF response time

Indicators
Power LED: Green (power ON)
Signal Strength LED: Red, flashes in proportion to signal strength. Steady on at 4x excess gain. Only indicates signal amplitude, not target distance.
Output LEDs: Yellow (output energized) / Red (configuration)
See *Overview* on page 1

Adjustments
DIP-switch-configurable sensing distance, sensitivity, response time, and output configuration

Construction
Housing: Polycarbonate
Lightpipes: Acrylic
Access Cap: Polyester

Operating Temperature
– 40° to + 65° C (– 40° to + 149° F)

Environmental Rating
IP67

Connections
Integral M12 Euro-style QD fitting. QD models require a mating cordset

Certifications
CE; CMIIT Category G, FCC part 15, RSS-210, ETSI/EN 300 440; others pending

Beam Angles

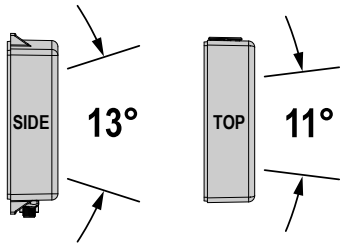

FCC ID: UE3Q240RAUS—This device complies with Part 15 of the FCC Rules. Operation is subject to the following two conditions: (1) this device may not cause harmful interference, and (2) this device must accept any interference received, including interference that may cause undesired operation.

IC: 7044A-Q240RA—This device complies with Industry Canada license-exempt RSS standard(s). Operation is subject to the following two conditions: (1) this device may not cause interference, and (2) this device must accept any interference, including interference that may cause undesired operation of the device.

Cet appareil est conforme aux CNR exempts de licence d'Industrie Canada. Son fonctionnement est soumis aux deux conditions suivantes: (1) Ce dispositif ne peut causer des interférences; et (2) Ce dispositif doit accepter toute interférence, y compris les interférences qui peuvent entraîner un mauvais fonctionnement de l'appareil.

Beam Pattern—US and CN Models

Typical Beam Pattern (with BRTR-CC20E Radar Target, Radar Cross Section = 50 m^2)	Typical Beam Pattern (with 4 different targets)
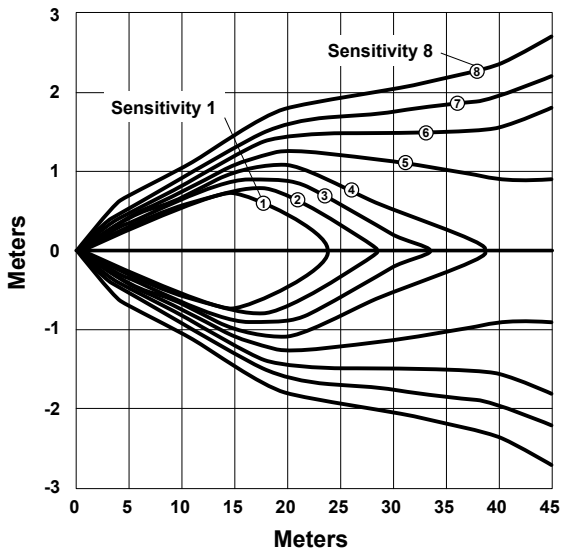	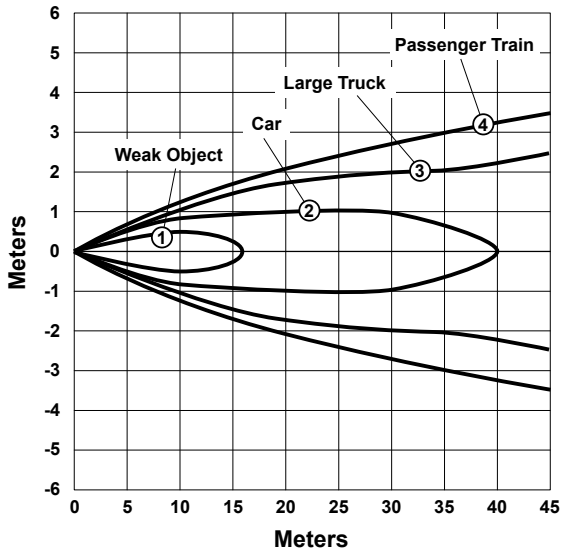
1–8: Indicates sensitivity level	At sensitivity level 8
1: Weak Object (Radar cross section = 0.25 m^2) 2: Car (Radar cross section = 3 m^2) 3: Large Truck (Radar cross section = 50 m^2) 4: Passenger Train (Radar cross section = 300 m^2)	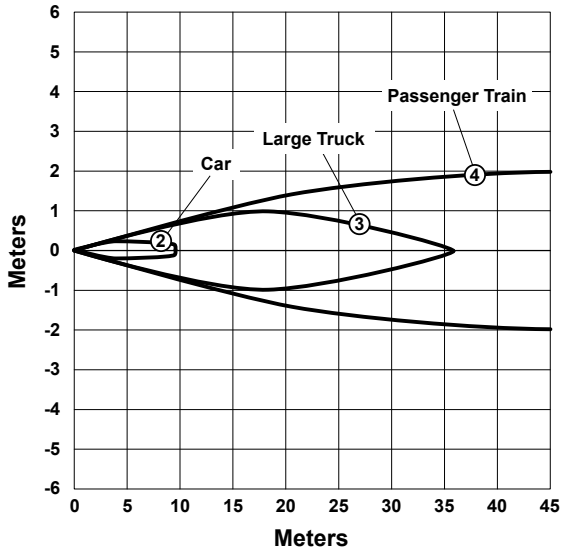
	At sensitivity level 4

NOTE: The effective beam pattern depends on the sensitivity level and target properties.

Beam Pattern—EU Models

Typical Beam Pattern (with BRTR-CC20E Radar Target, Radar Cross Section = 50 m^2)	Typical Beam Pattern (with 4 different targets)
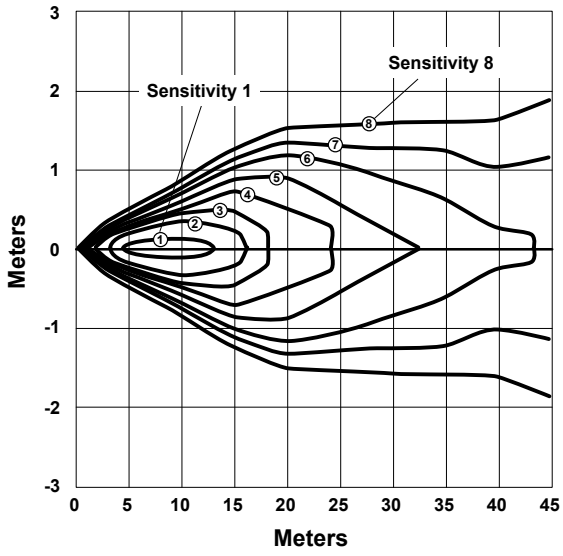	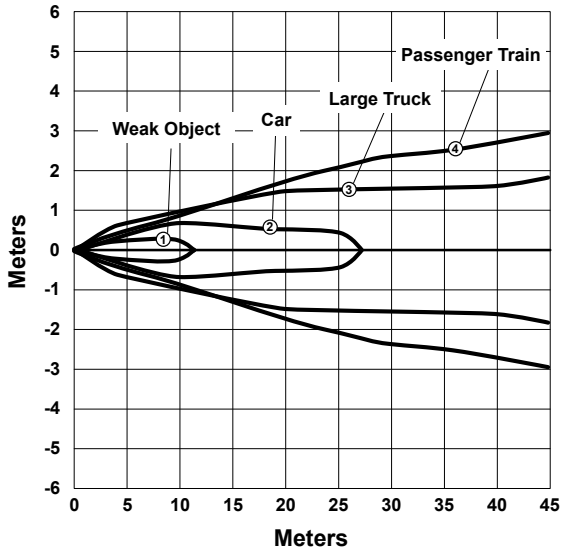
1–8: Indicates sensitivity level	At sensitivity level 8
1: Weak Object (Radar cross section = 0.25 m^2) 2: Car (Radar cross section = 3 m^2) 3: Large Truck (Radar cross section = 50 m^2) 4: Passenger Train (Radar cross section = 300 m^2)	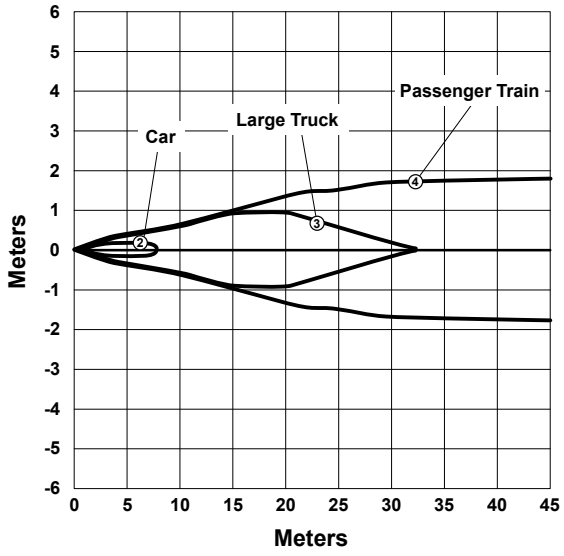
	At sensitivity level 5

NOTE: The effective beam pattern depends on the sensitivity level and target properties.

Dimensions

All measurements are listed in millimeters [inches], unless noted otherwise.

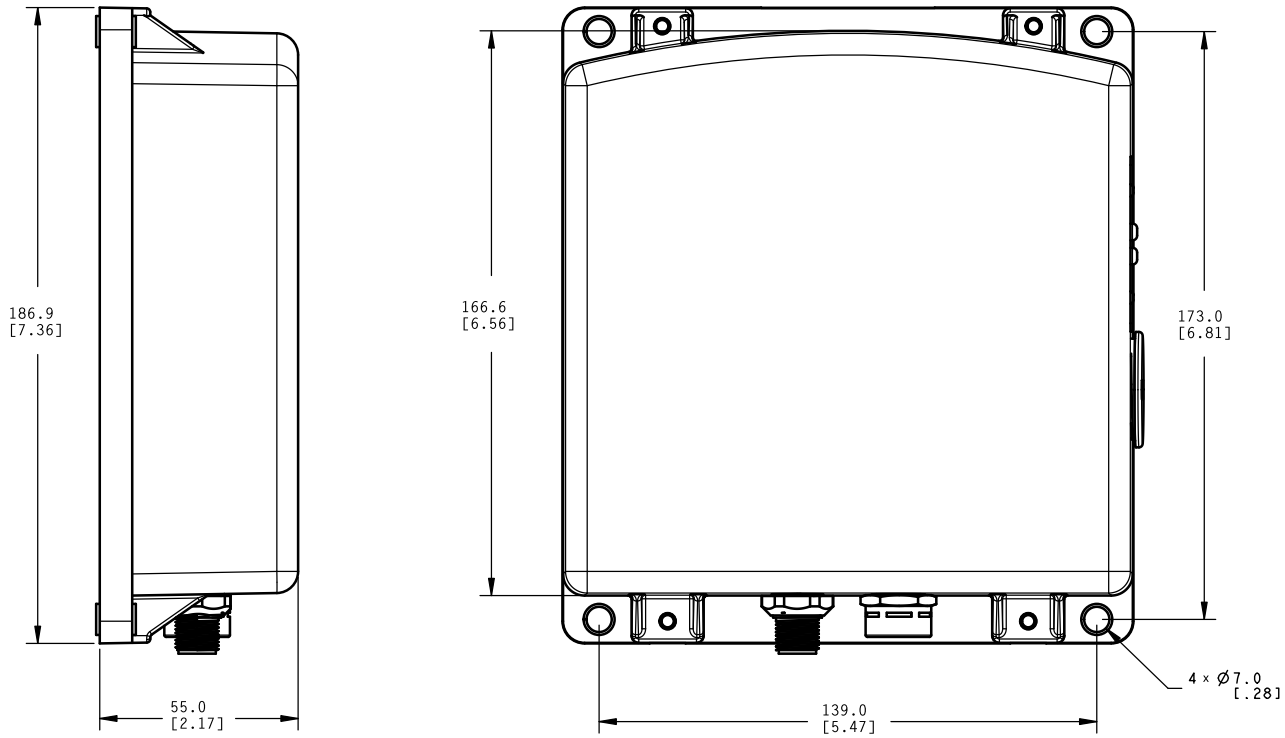

Windows

The R-GAGE sensor can be placed behind a glass or a plastic window, but the configuration must be tested and the distance from the sensor to the window must be determined and controlled prior to installation. There is typically a 20% signal reduction when the sensor is placed behind a window.

Polycarbonate at 4 mm thickness performs well in most situations, but the performance depends on filler materials. Thinner (1 to 3 mm) windows have high reflection. The amount of reflection depends on the material, thickness, and distance from the sensor to the window.

Locate the sensor in a position of minimum reflection from the window, which will repeat every 6.1 mm of distance between the sensor and the window. The positions of maximum reflection from the window repeat between the minimums, and decrease in effect until the window is approximately 150 mm (5.9 in) away. Consult the factory for pre-tested window materials which can be used at any distance without issue.

Additionally, the face of the window should be protected from flowing water and ice by use of a flow diverter or hood directly above the window. Falling rain or snow in the air in front of the window, light water mist, or small beads on the face of the window are typically not an issue. However, a thick, continuous surface of water or ice directly on the face of the window can be detected as a dielectric boundary.

The Q240WS is a clip-on hydrophobic weather shield accessory specially designed to meet these requirements.

Wiring

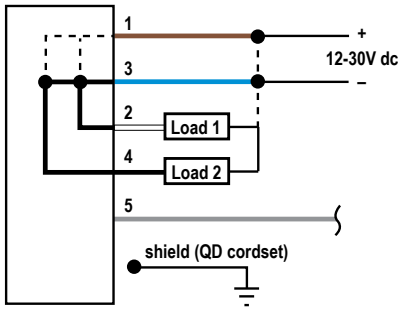

Wiring Key:

1. Brown
2. White
3. Blue
4. Black
5. Gray (Do not connect)

NOTE: Banner recommends that the shield wire (QD cordsets only) be connected to earth ground or dc common. Shielded cordsets are recommended for all QD models.

Accessories

Quick Disconnect (QD) Cordsets

5-Pin Threaded M12/Euro-Style Cordsets—with Shield				
Model	Length	Style	Dimensions	Pinout (Female)
MQDEC2-506	1.83 m (6 ft)	Straight	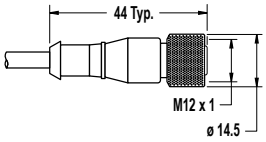	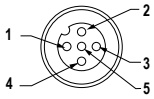 1 = Brown 2 = White 3 = Blue 4 = Black 5 = Gray
MQDEC2-515	4.57 m (15 ft)			
MQDEC2-530	9.14 m (30 ft)			
MQDEC2-550	15.2 m (50 ft)			
MQDEC2-506RA	1.83 m (6 ft)	Right-Angle	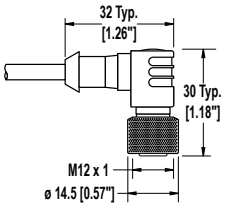	
MQDEC2-515RA	4.57 m (15 ft)			
MQDEC2-530RA	9.14 m (30 ft)			
MQDEC2-550RA	15.2 m (50 ft)			

NOTE: Pin 5 is not used.

Brackets and Other Accessories

SMBQ240SS2

- Add-on accessory to be used in conjunction with SMBQ240SS1
- Provides ± 20° of tilt in second axis for maximum control of sensor alignment
- 12 gauge stainless steel

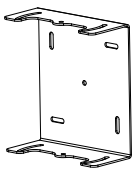

Q240WS

- Coated to help repel water and maximize signal strength
- Snap-on cover for easy application and replacement

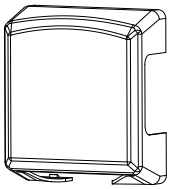

SMBQ240SS1

- Sensor mounting plate and pivoting bracket
- Provides ± 20° of tilt in one axis for enhanced sensor alignment
- 12 gauge stainless steel
- Sensor can mount on bracket horizontally or vertically

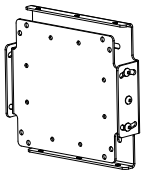

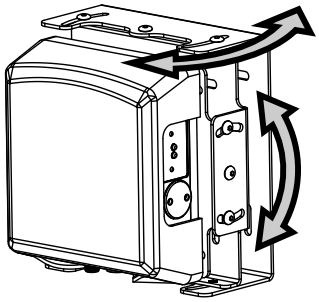

Q240RA R-GAGE sensor shown with all three accessories installed.

Banner Engineering Corp. Limited Warranty

Banner Engineering Corp. warrants its products to be free from defects in material and workmanship for one year following the date of shipment. Banner Engineering Corp. will repair or replace, free of charge, any product of its manufacture which, at the time it is returned to the factory, is found to have been defective during the warranty period. This warranty does not cover damage or liability for misuse, abuse, or the improper application or installation of the Banner product.

THIS LIMITED WARRANTY IS EXCLUSIVE AND IN LIEU OF ALL OTHER WARRANTIES WHETHER EXPRESS OR IMPLIED (INCLUDING, WITHOUT LIMITATION, ANY WARRANTY OF MERCHANTABILITY OR FITNESS FOR A PARTICULAR PURPOSE), AND WHETHER ARISING UNDER COURSE OF PERFORMANCE, COURSE OF DEALING OR TRADE USAGE.

This Warranty is exclusive and limited to repair or, at the discretion of Banner Engineering Corp., replacement. IN NO EVENT SHALL BANNER ENGINEERING CORP. BE LIABLE TO BUYER OR ANY OTHER PERSON OR ENTITY FOR ANY EXTRA COSTS, EXPENSES, LOSSES, LOSS OF PROFITS, OR ANY INCIDENTAL, CONSEQUENTIAL OR SPECIAL DAMAGES RESULTING FROM ANY PRODUCT DEFECT OR FROM THE USE OR INABILITY TO USE THE PRODUCT, WHETHER ARISING IN CONTRACT OR WARRANTY, STATUTE, TORT, STRICT LIABILITY, NEGLIGENCE, OR OTHERWISE.

Banner Engineering Corp. reserves the right to change, modify or improve the design of the product without assuming any obligations or liabilities relating to any product previously manufactured by Banner Engineering Corp. Any misuse, abuse, or improper application or installation of this product or use of the product for personal protection applications when the product is identified as not intended for such purposes will void the product warranty. Any modifications to this product without prior express approval by Banner Engineering Corp will void the product warranties. All specifications published in this document are subject to change; Banner reserves the right to modify product specifications or update documentation at any time. For the most recent version of any documentation, refer to: *www.bannerengineering.com*.

© Banner Engineering Corp. All rights reserved