PY291A
2K x 8 REPROGRAMMABLE PROM

FEATURES

- **EPROM Technology for reprogramming**
- **High Speed**
  - **– 20/25/35/50 ns (Commercial)**
  - **– 35/50 ns (Military)**
- **Low Power Operation: 660 mW**
- **Single 5V±10% Power Supply**
- **Windowed devices for reprogramming**
- **Fully TTL Compatible Inputs and Outputs**
- **Standard Pinout (JEDEC Approved)**
  - **– 24-Pin 300 mil DIP**
    - **– Windowed CERDIP**
    - **– Non-Windowed CERDIP**
    - **– Non-Windowed Plastic DIP**

DESCRIPTION

The PY291A is a 2Kx8 CMOS PROM. The device is available in windowed packages which when exposed to UV light, the memory content in the PROM is erased and can be reprogrammed. EPROM technology is used in the memory cells for programming. The EPROM requires a 12.5V for programming. Devices are tested to insure that performance of the device meets the DC and AC specification limits after customer programming.

To perform a read operation from the device, $\overline{CS}_1$ is LOW and CS_2 and CS_3 are HIGH. The memory contents in the address established by the Address pins (A_0 to A_{10}) will become available on the outputs (O_0 to O_7).

The PY291A is available in 24-pin 300 mil Ceramic DIPs (CERDIP, Windowed and Non-Windowed) and Plastic DIPs (Non-Windowed).

FUNCTIONAL BLOCK DIAGRAM

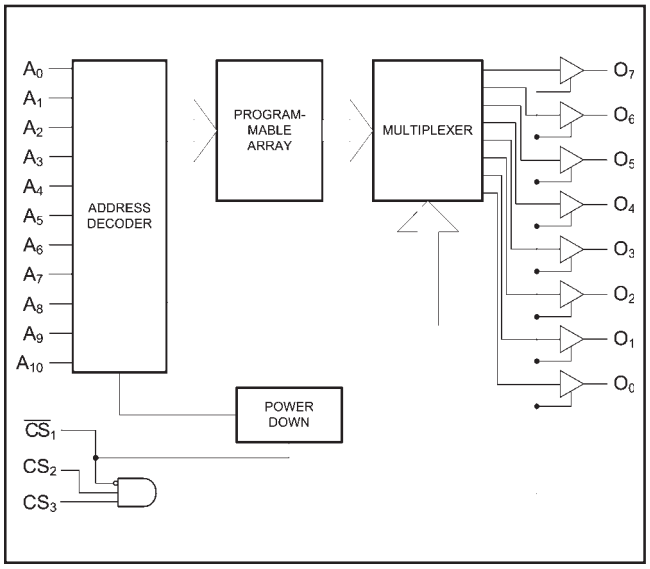

PIN CONFIGURATION

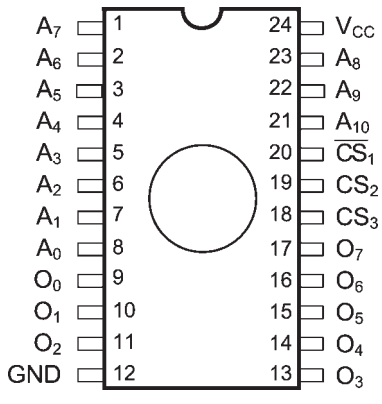

DIP (P4, D4, WD1)
Note: Window on WD1 package only

MAXIMUM RATINGS[1]

Symbol	Parameter	Value	Unit
V_{CC}	Power Supply Pin with Respect to GND	–0.5 to +7	V
V_{TERM}	Terminal Voltage with Respect to GND (up to 7.0V)	–0.5 to V_{CC} +0.5	V
V_{PP}	Program Voltage	13	V

Symbol	Parameter	Value	Unit
T_A	Operating Temperature	–55 to +125	°C
T_{BIAS}	Temperature Under Bias	–55 to +125	°C
T_{STG}	Storage Temperature	–65 to +150	°C
P_T	Power Dissipation	1.0	W
I_{OUT}	DC Output Current	50	mA

RECOMMENDED OPERATING CONDITIONS

Grade[2]	Ambient Temp	Gnd	Vcc
Commercial	0°C to 70°C	0V	5.0V ±10%
Military	-55°C to +125°C	0V	5.0V ±10%

CAPACITANCES[4]

(V_{CC} = 5.0V, T_A = 25°C, f = 1.0MHz)

Symbol	Parameter	Conditions	Typ.	Unit
C_{IN}	Input Capacitance	V_{IN} = 0V	10	pF
C_{OUT}	Output Capacitance	V_{OUT}= 0V	10	pF

DC ELECTRICAL CHARACTERISTICS

Over recommended operating temperature and supply voltage[2]

Symbol	Parameter	Test Conditions	PY291A		Unit
			Min	Max	
V_{IH}	Input High Voltage		2.0	V_{CC}	V
V_{IL}	Input Low Voltage		–0.5[3]	0.8	V
V_{HC}	CMOS Input High Voltage		V_{CC} –0.2	V_{CC} +0.5	V
V_{LC}	CMOS Input Low Voltage		–0.5[3]	0.2	V
V_{OL}	Output Low Voltage (TTL Load)	I_{OL} = +16 mA, V_{CC} = Min.		0.4	V
V_{OH}	Output High Voltage (TTL Load)	I_{OH} = –4 mA, V_{CC} = Min.	2.4		V
I_{LI}	Input Leakage Current	V_{CC} = Max. V_{IN} = GND to V_{CC}	–10	+10	µA
I_{LO}	Output Leakage Current	V_{CC} = Max., $\overline{CE}$ = V_{IH}, V_{OUT} = GND to V_{CC}	–10	+10	µA
V_{PP}	Programming Supply Voltage		12	13	V
I_{PP}	Programming Supply Current			50	mA
V_{IHP}	Input HIGH Programming Voltage		3.0		V
V_{ILP}	Input LOW Programming Voltage			0.4	V

POWER DISSIPATION CHARACTERISTICS VS. SPEED

Symbol	Parameter	Temperature Range	–20	–25	–35	–50	Unit
I_{CC}	Dynamic Operating Current*	Commercial	120	90	90	90	mA
		Military	N/A	N/A	90	90	mA

AC ELECTRICAL CHARACTERISTICS—READ CYCLE

(V_{CC} = 5V ± 10%, All Temperature Ranges)[2]

Symbol	Parameter	-20		-25		-35		-50		Unit
		Min	Max	Min	Max	Min	Max	Min	Max	
t_{AA}	Address to Output Valid		20		25		35		50	ns
t_{HZCS1}	Chip Select Inactive to High Z		15		15		20		20	ns
t_{ACS1}	Chip Select Active to Output Valid		15		15		20		20	ns
t_{HZCS2}	Chip Select Inactive to High Z		22		27		35		45	ns
t_{ACS2}	Chip Select Active to Output Valid		22		27		35		45	ns
t_{PU}	Chip Select Active to Power-Up	0		0		0		0		ns
t_{PD}	Chip Slect Inactive to Power-Down		22		27		35		45	ns

TIMING WAVEFORM OF READ CYCLE

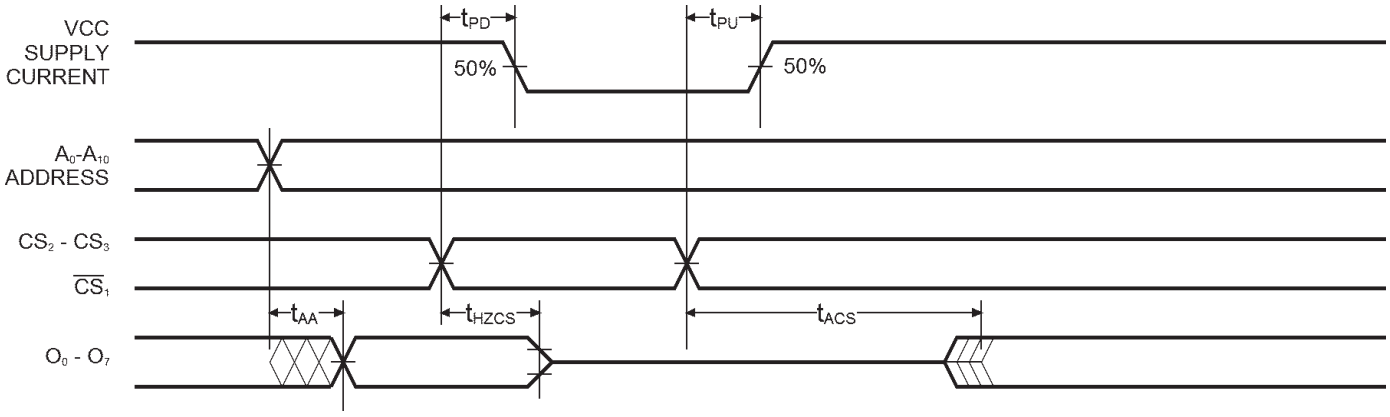

Notes:

1. Stresses greater than those listed under MAXIMUM RATINGS may cause permanent damage to the device. This is a stress rating only and functional operation of the device at these or any other conditions above those indicated in the operational sections of this specification is not implied. Exposure to MAXIMUM rating conditions for extended periods may affect reliability.
2. Extended temperature operation guaranteed with 400 linear feet per minute of air flow.
3. Transient inputs with V_{IL} and I_{IL} not more negative than –3.0V and –100mA, respectively, are permissible for pulse widths up to 20 ns.
4. This parameter is sampled and not 100% tested.

DEVICE ERASURE

If the device is subjected to wavelengths of light below 4000 Angstroms, device erasure will commence. It is therefore recommended to use an opaque label over the window in the event the device will be exposed to lighting for a long time. The UV dose for erasure requires a wavelength of 2,537 Angstroms for a minimum dose of 25 Wsec/cm^2. If using a UV lamp of 12 mW/cm^2, the exposure time is estimated to be 35 minutes. Devices should be positioned within 1 inch of the lamp during the erasure process. Permanent damage can occur to the devices if exposed to UV light for an extended period of time.

MODE SELECTION

Mode		Pin Function				
	Read or Output Disable	**A_{10}-A_0**	**CS_3**	**CS_2**	**$\overline{CS_1}$**	**O_7-O_0**
	Other	**A_{10}-A_0**	**$\overline{PGM}$**	**$\overline{VFY}$**	**V_{PP}**	**D_7-D_0**
Read		A_{10}-A_0	V_{IH}	V_{IH}	V_{IL}	O_7-O_0
Output Disable		A_{10}-A_0	X	X	V_{IH}	High Z
Output Disable		A_{10}-A_0	X	V_{IL}	X	High Z
Output Disable		A_{10}-A_0	V_{IL}	X	X	High Z
Program		A_{10}-A_0	V_{ILP}	V_{IHP}	V_{PP}	D_7-D_0
Program Verify		A_{10}-A_0	V_{IHP}	V_{ILP}	V_{PP}	O_7-O_0
Program Inhibit		A_{10}-A_0	V_{IHP}	V_{IHP}	V_{PP}	High Z
Intelligent Program		A_{10}-A_0	V_{ILP}	V_{IHP}	V_{PP}	D_7-D_0
Blank Check Zeros		A_{10}-A_0	V_{IHP}	V_{ILP}	V_{PP}	Zeros

X = Don't Care

PROGRAMMING PINOUTS

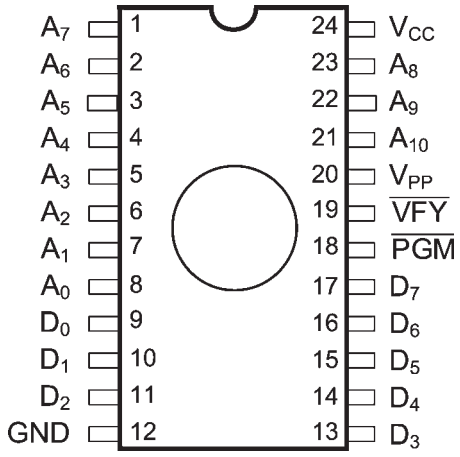

AC TEST CONDITIONS

Input Pulse Levels	GND to 3.0V
Input Rise and Fall Times	3ns
Input Timing Reference Level	1.5V
Output Timing Reference Level	1.5V
Output Load	See Figures 1 and 2

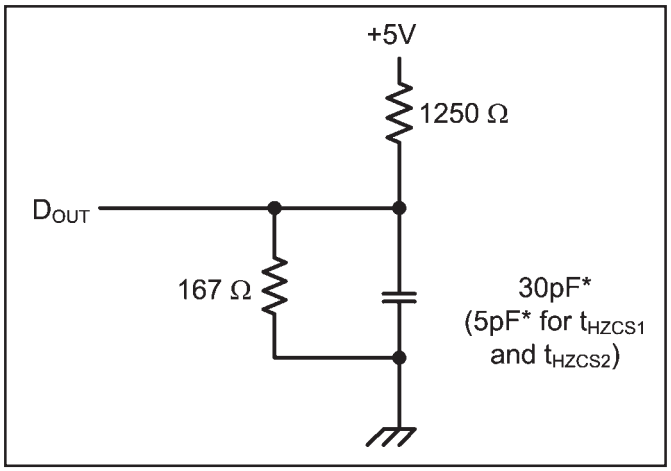

Figure 1. Output Load

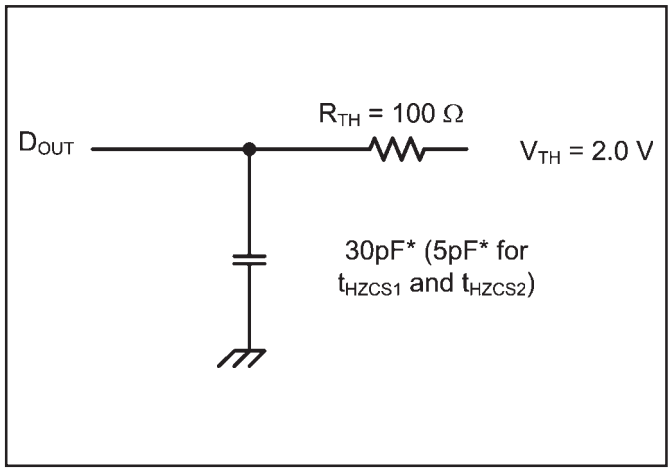

Figure 2. Thevenin Equivalent

* including scope and test fixture.

Note:
Because of the ultra-high speed of the PY291A, care must be taken when testing this device; an inadequate setup can cause a normal functioning part to be rejected as faulty. Long high-inductance leads that cause supply bounce must be avoided by bringing the V_{CC} and ground planes directly up to the contactor fingers. A 0.01 µF high frequency capacitor is also required between V_{CC} and ground.

ORDERING INFORMATION

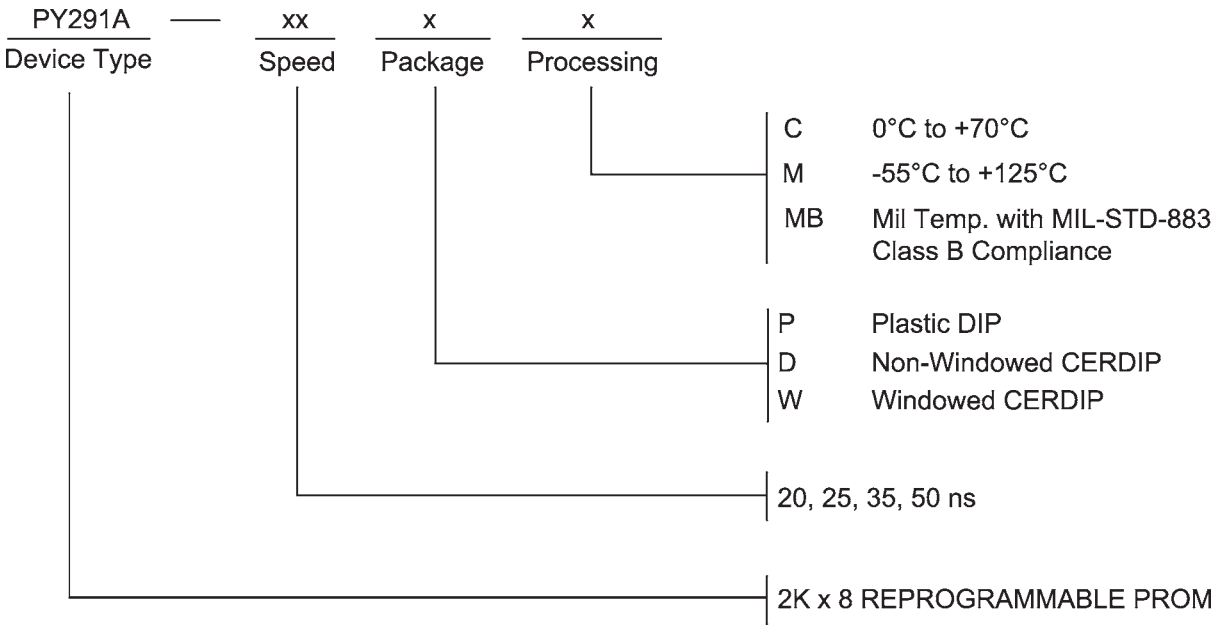

SELECTION GUIDE

The PY291A is available in the following temperature, speed and package options.

Temperature Range	Package	Speed (ns)			
		20	25	35	50
Commercial	Plastic DIP	-20PC	-25PC	-35PC	-50PC
Military Temperature	Windowed CERDIP	N/A	N/A	-35WM	-50WM
	Non-Windowed CERDIP	N/A	N/A	-35DM	-50DM
Military Processed*	Windowed CERDIP	N/A	N/A	-35WMB	-50WMB
	Non-Windowed CERDIP	N/A	N/A	-35DMB	-50DMB

* Military temperature range with MIL-STD-883, Class B processing.
N/A = Not Available

Pkg #	D4	
# Pins	24 (300 mil)	
Symbol	**Min**	**Max**
A	-	0.200
b	0.014	0.026
b2	0.045	0.065
C	0.008	0.018
D	-	1.280
E	0.220	0.310
eA	0.300 BSC	
e	0.100 BSC	
L	0.125	0.200
Q	0.015	0.060
S1	0.005	-
α	0°	15°

CERAMIC DUAL IN-LINE PACKAGE (NON-WINDOWED)

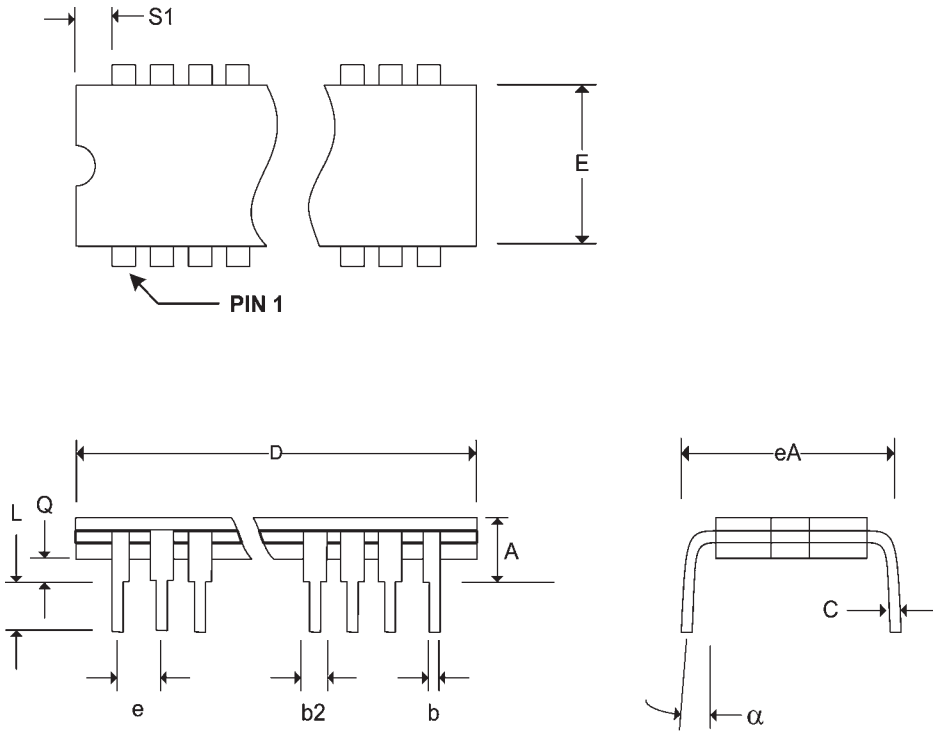

Pkg #	WD1	
# Pins	24 (300 mil)	
Symbol	**Min**	**Max**
A	-	0.200
b	0.014	0.026
b2	0.045	0.065
C	0.008	0.018
D	-	1.280
E	0.220	0.310
eA	0.300 BSC	
e	0.100 BSC	
L	0.125	0.200
Q	0.015	0.060
S1	0.005	-
	0°	15°
WD	0.175	

CERAMIC DUAL IN-LINE PACKAGE (WINDOWED)

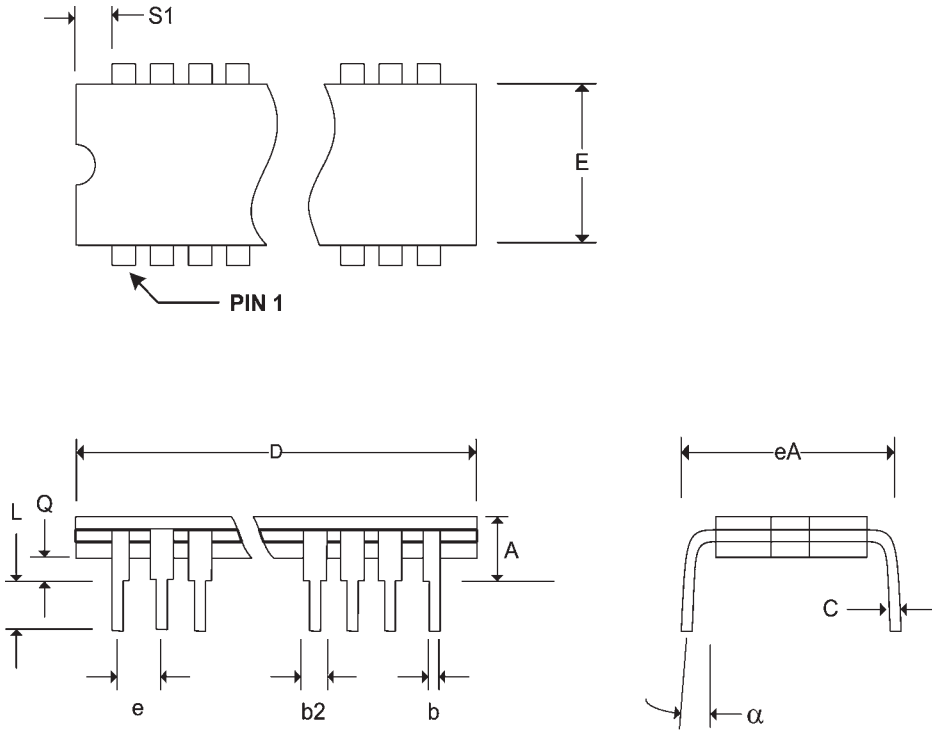

Pkg #	**P4**	
# Pins	24 (300 Mil)	
Symbol	**Min**	**Max**
A	-	0.210
A1	0.015	-
b	0.014	0.022
b2	0.045	0.070
C	0.008	0.014
D	1.230	1.280
E1	0.240	0.280
E	0.280	0.325
e	0.100 BSC	
eB	-	0.430
L	0.115	0.160
α	0°	15°

PLASTIC DUAL IN-LINE PACKAGE

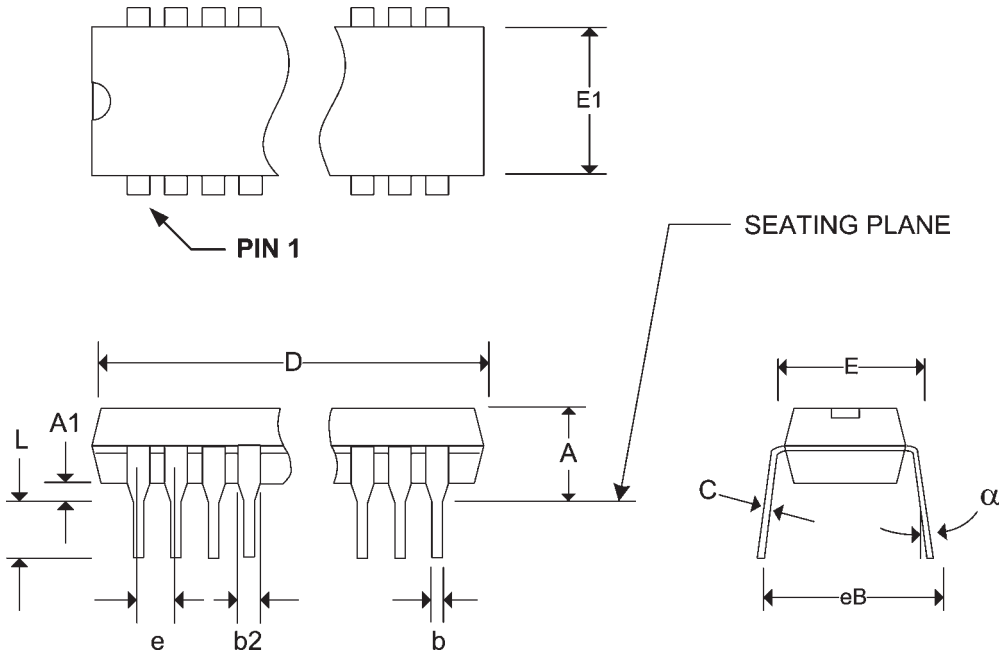

REVISIONS

DOCUMENT NUMBER: EPROM101
DOCUMENT TITLE: PY291A 2K x 8 REPROGRAMMABLE PROM

REV.	ISSUE DATE	ORIG. OF CHANGE	DESCRIPTION OF CHANGE
OR	Jun-2007	JDB	New Data Sheet