EN60 320-1 Standard Sheet C18 Class II Cold Condition

FLANGE MOUNT INLET



- Two Pin Class II (No Earth Pin)
- 2.8, 4.8, 6.3mm Tabs or Screw Terminals
- 10A, 250V a.c. (15A, 250V a.c. UL & CSA)

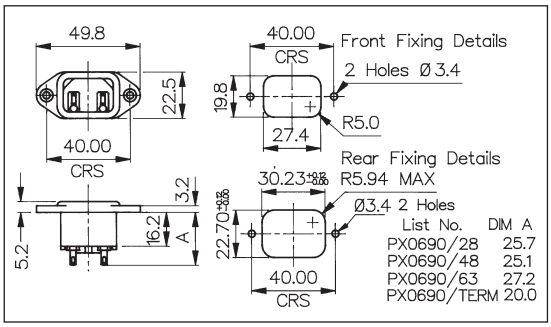

SNAP FIT TO PANEL INLET



- Two Pin Class II (No Earth Pin)
- Panel Sizes 1, 1.5, 2.0 or 3.0mm
- 2.8, 4.8, 6.3mm Tabs or Screw Terminals
- 10A, 250V a.c. (15A, 250V a.c. UL & CSA)

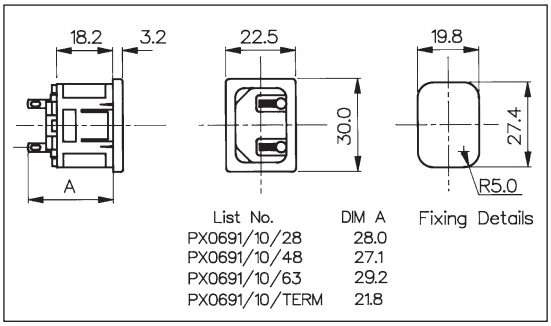

PC SNAP FIT TO PANEL INLET



- Two Pin Class II (No Earth Pin)
- Panel Sizes 1, 1.5, 2.0 or 3.0mm
- PC Spills
- 10A, 250V a.c. (15A, 250V a.c. UL & CSA)

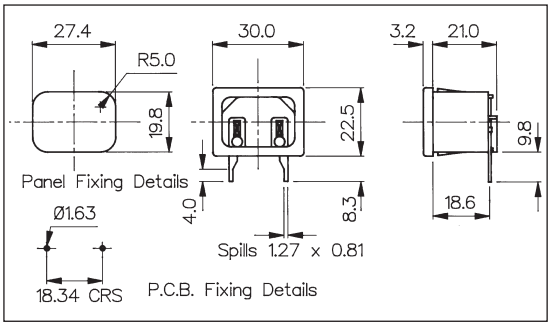

Specification	PX0690/Term/Col	PX0691/Panel/Term/Col	PX0691/Panel/PC/Col
Fixing(Panel):	Flange	Snap fit, /10 (1mm), /15 (1.5mm), /20 (2mm), /30 (3mm)	Snap fit, /10 (1mm), /15 (1.5mm), /20 (2mm), /30 (3mm)
Terminations:	/28 (2.8mm solder), /48 (4.8mm tab) /63 (6.3mm tab), /TERM (screw)	/28 (2.8mm solder), /48 (4.8mm tab) /63 (6.3mm tab), /TERM (screw)	P.C. Spills
Colours:	No suffix (Black), /WH (White), /GY (Grey)	No suffix (Black), /WH (White), /GY (Grey)	No suffix (Black), /WH (White), /GY (Grey)
Max. Rating:	10A, 250V a.c. (UL & CSA 15A, 250V a.c.)	10A, 250V a.c. (UL & CSA 15A, 250V a.c.)	10A, 250V a.c. (UL & CSA 15A, 250V a.c.)
Contact Resistance:	<10mΩ	<10mΩ	<10mΩ
Insulation Resistance:	>10^3 MΩ	>10^3 MΩ	>10^3 MΩ
A.C. Breakdown:	Pole-Pole 5kV. Poles-Panel 10kV	Pole-Pole 5kV. Poles-Panel 5.4kV	Pole-Pole 5kV. Poles-Panel 5.4kV
Operating Temp. Range:	–40°C to +70°C	–40°C to +70°C	–40°C to +70°C
Max. Pin Temp.:	+70°C	+70°C	+70°C
Mouldings:	Nylon, Flammability Rating UL94V-0	Nylon, Flammability Rating UL94V-0	Nylon, Flammability Rating UL94V-0
Contacts:	Brass: Pins, Nickel Plated. Tabs, Tin Plated, Screw Terms, Nickel Plated	Brass: Pins, Nickel Plated. Tabs, Tin Plated, Screw Terms, Nickel Plated	Brass: Pins, Nickel Plated. Spills, Tin Plated
Approvals:			
Accessories / Notes:	P.No. 11328 (See Page 97)	P.No. 11328 (See Page 97)	Standard without cover. With cover add /C to P.No.
Mating Connectors:			
RoHS	Compliant	Compliant	Compliant