USB / Ethernet true RMS

Smart Power Sensor

PWR-6LRMS-RC

50Ω -45 dBm to +10 dBm, 50 to 6000 MHz

The Big Deal

- **USB** *and* **Ethernet** control
- True RMS power sensor
  (Measure CW and modulated signals)
- Includes GUI with measurement applications software, simplifying complex measurements
- Measure power levels as low as -45 dBm
- Measurement speed 30msec



Software Package

CASE STYLE: JL1941

Product Overview

The Mini-Circuits PWR-6LRMS-RC true RMS Smart Power Sensor is a pocket-sized, 4.95" x 1.74" x 1.08", precision test device, controlled via USB or Ethernet, that turns your Windows® or Linux® PC into a power meter. The power sensor provides highly accurate measurements of CW, modulated and multi tone signals, supporting a wide vriety of applications including testing 3G and 4G products, cell phones and general RF components. Each unit is shipped with our N-to-SMA adapter, a quick-locking "Y" control cable for reliable connectivity of both USB and Ethernet control. User-Friendly GUI software, DLLs for programmers, user guide and detailed programming instructions are available for download from **http://www.minicircuits.com/softwaredownload/pm.html**.

Key Features

Feature	Advantages
True RMS	Allows measurement of CW, modulated and multi tone signals
Ethernet-TCP/IP- **HTTP** and **Telnet** Protocols (Supports DHCP and Static IP)	The PWR-6LRMS-RC power meter can be controlled from any Windows®, Mac®, or Linux® computer, or even a mobile device with a network connection and Ethernet-TCP/IP (HTTP or Telnet protocols) support. Using a VPN would allow remote control from anywhere in the world.
USB control	User may also control the power sensor via USB connection. Plug-and-Play, no driver required. Compatible with Windows® or Linux® operating systems using 32 and 64 bit architecture (up to 24 sensors simultaneously).
GUI program with USB and Ethernet interfaces	Allows quick and easy measurement, average measurements, data recording, and more.
'Measurement Application' GUI software built-in	Automated measurement setups which allow the user to perform measurements on RF components such as Couplers, Filters, Amplifiers, etc. , display numerical data and graphs, and analyze the data.
No calibration required before taking measurement	The PWR-6LRMS-RC does not require any reference signal for calibration.
5V power supply	Powered via USB plug from PC, AC/DC adapter or from commercially available Power Over Ethernet (PoE) splitter with 5V output.

Trademarks: Windows is a registered trademark of Microsoft Corporation in the United States and other countries. Linux is a registered trademark of Linus Torvalds. Mac is a registered trademark of Apple Corporation. Pentium is a registered trademark of Intel Corporation. Neither Mini-Circuits nor the Mini-Circuits PWR-series power sensors are affiliated with or endorsed by the owners of the above referenced trademarks

Mini-Circuits and the Mini-Circuits logo are registered trademarks of Scientific Components Corporation.

USB / Ethernet true RMS

Smart Power Sensor

PWR-6LRMS-RC

50Ω 50 to 6000 MHz

Product Features

- USB and Ethernet control
- Supports HTTP and Telnet network protocols
- True RMS detection enables measuring CW, modulated and multi-tone signals.
- 55 dB Dynamic Range, -45 to +10 dBm
- Good VSWR, 1.10:1 typ.
- Fast measurement speed, 30 msec typ.
- Automatic frequency calibration & temperature compensation
- Multi-sensor capability (up to 24)
- Built in Application Measurement Software
- Remote operation via internet
- Effective, easy-to-use Windows® GUI
- Compatible with 32/64-bit Windows® or Linux® operating systems
- Supports a wide range of programming environments (See application note **AN-49-001** for details)



Software Package

CASE STYLE: JL1941

Model No.	Description
PWR-6LRMS-RC	**USB/Ethernet** *smart* **True RMS Power Sensor**
Included Accessories	
PWRSN-6LRMS-RC	Power Sensor Head
USB-RJ45-CBL-7+	6.6 ft "Y" data cable (USB & RJ45)
NF-SM50+	N-Type (F) to SMA(M) Adapter

Typical Applications

- Turn almost any Windows or Linux PC into a Power Meter
- Pocket-sized portability for benchtop testing anywhere
- Remote location monitoring
- Automatic, scheduled data collection
- Evaluate high-power, multi-port devices with built-in virtual couplers/attenuators & other software tools
- Wide variety of applications including testing 3G, 4G, and Wi-Fi products

RoHS Compliant

See our web site for RoHS Compliance methodologies and qualifications

Mini-Circuits Power Meter Program for *Smart* Power Sensor

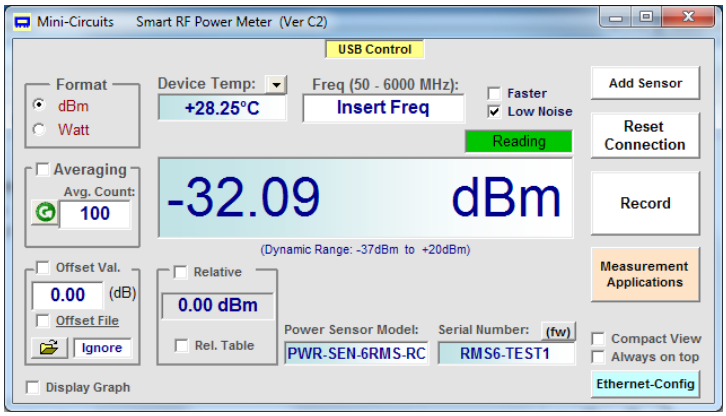

Electrical Specifications, -45 dBm to +10 dBm, 50 to 6000 MHz

Parameter		Freq. Range (MHz)	Min.	Typ.	Max.	Units
Dynamic Range [1]		50 - 6000	-45	-	+10	dBm
VSWR		50 - 6000	-	1.10	1.30	:1
Uncertainty of Power Measurement [2] @ 25ºC	@ -45 to -40 dBm [3,4]	50 - 3000	-	±0.15	±0.40	dB
		3000 - 6000	-	±0.20	±0.45	dB
	@ -40 to -10 dBm	50 - 3000	-	±0.15	±0.30	dB
		3000 - 6000	-	±0.15	±0.30	dB
	@ -10 to +10 dBm	50 - 3000	-	±0.15	±0.30	dB
		3000 - 6000	-	±0.15	±0.30	dB
Uncertainty of Power Measurement [2] @ 0ºC to 50ºC	@ -45 to -40 dBm [3,4]	50 - 3000	-	±0.15	-	dB
		3000 - 6000	-	±0.20	-	dB
	@ -40 to -10 dBm	50 - 3000	-	±0.15	-	dB
		3000 - 6000	-	±0.15	-	dB
	@ -10 to +10 dBm	50 - 3000	-	±0.15	-	dB
		3000 - 6000	-	±0.15	-	dB
Linearity @ 25ºC		50 - 6000	-	± 1.6	-	%
Measurement Resolution		50 - 6000	0.01	-	-	dB
Averaging Range		50 - 6000	1	-	999	-
Measurement Speed	@ Low Noise Mode	50 - 6000	-	100	-	msec
	@ Faster Mode		-	30	-	
Current (via host USB)		50 - 6000	-	230	300	mA

[1] Maximum continuous safe operational power limit: +13 dBm. Performance is guaranteed up to +10 dBm.
[2] Tested with CW signal
[3] When using Faster mode at high frequencies below -30dBm, use of averaging is recommended to prevent noise errors.
[4] When using Faster mode below -30dBm, uncertainty value may increase by up to 0.2 dB relative to Low noise mode

Electrical Specifications (Continued), -45 dBm to +10 dBm, 50 to 6000 MHz

Parameter			Freq. Range (MHz)	Min.	Typ.	Max.	Units
Uncertainty of Power Measurement (digital modulation) [5] @ 25ºC	QPSK, QAM16 & QAM64 in LTE uplink setup (1.4 MHz channels, 3.7 MHz offsets)	@ -40 dBm	50 - 1000 & 1500 - 6000	-	±0.35	-	dB
		@ -30 dBm		-	±0.25	-	
		@ -15 dBm		-	±0.25	-	
		@ 0 dBm		-	±0.40	-	
	QPSK in WiMax setup (10MHz channel, 22.4MHz sample clock)	@ -40 dBm	2000 - 6000	-	±0.35	-	dB
		@ -30 dBm		-	±0.30	-	
		@ -15 dBm		-	±0.50	-	
		@ 0 dBm		-	±0.30	-	
	64QAM in WLAN setup (10MHz channel, 22.4MHz sample clock)	@ -40 dBm	2000 - 6000	-	±0.35	-	dB
		@ -30 dBm		-	±0.25	-	
		@ -15 dBm		-	±0.4	-	
		@ 0 dBm		-	±0.35	-	
	MSK in GSM setup (Gausian filter @270,833 sps)	@ -40 dBm	50 - 6000	-	±0.35	-	dB
		@ -30 dBm		-	±0.30	-	
		@ -15 dBm		-	±0.30	-	
		@ 0 dBm		-	±0.30	-	
	DQPSK in NADC setup (RNYQ filter@24.3 ksps)	@ -40 dBm	50 - 6000	-	±0.30	-	dB
		@ -30 dBm		-	±0.25	-	
		@ -15 dBm		-	±0.25	-	
		@ 0 dBm		-	±0.30	-	
	DQPSK in PWT setup (RNYQ filter@576 ksps)	@ -40 dBm	50 - 6000	-	±0.35	-	dB
		@ -30 dBm		-	±0.25	-	
		@ -15 dBm		-	±0.20	-	
		@ 0 dBm		-	±0.25	-	
	256QAM in DECT setup (Gausian filter@1.152Msps)	@ -40 dBm	50 - 6000	-	±0.35	-	dB
		@ -30 dBm		-	±0.30	-	
		@ -15 dBm		-	±0.30	-	
		@ 0 dBm		-	±0.30	-	
	4QAM in PHS setup (RNYQ filter@192ksps)	@ -40 dBm	50 - 6000	-	±0.35	-	dB
		@ -30 dBm		-	±0.35	-	
		@ -15 dBm		-	±0.30	-	
		@ 0 dBm		-	±0.35	-	
Pulse Modulation, modulating signal frequency			50 - 6000	500	-	-	Hz
Effect of multi-tone signals (within span of 15 MHz) [6,7]			50 - 100	-	±0.1	±0.3	dB
Effect of multi-tone signals (within span of 50 MHz) [6,7]			100 - 6000	-	±0.1	±0.3	

[5] Digital modulation transmission rates are measured in 'symbols per second' (sps) and use a bandpass filter on the output to limit spectral spreading.
[6] Relative to an equivalent CW signal @+25°C
[7] Tested at -40 to 0 dBm @+25°C average modulated power. Be careful that peak power does not exceed specified Maximum power.

Minimum System Requirements

Parameter	Requirements
Interface	USB HID or HTTP Get/Post or Telnet protocols
Host operating system - USB control	**Windows 32/64 Bit operating system:** Windows 98®, Windows XP®, Windows Vista®, Windows 7®, Windows 8® Windows 10® **Linux ® support:** 32/64 Bit operating system
Host operating system - Ethernet control	Any Windows®, Mac®, or Linux® computer with a network port and Ethernet-TCP/IP (HTTP or Telnet protocols) support
Hardware	Pentium® II or higher, RAM 256 MB
Y control cable for USB and Ethernet (supplied)	Power sensor to be used with the supplied control cable only

Absolute Maximum Ratings

Parameter	Ratings
Operating Temperature	0°C to 50°C
Storage Temperature	-30°C to 70°C
DC Voltage at RF port	16 V
CW Power	+15 dBm

Outline Drawing (JL1941)

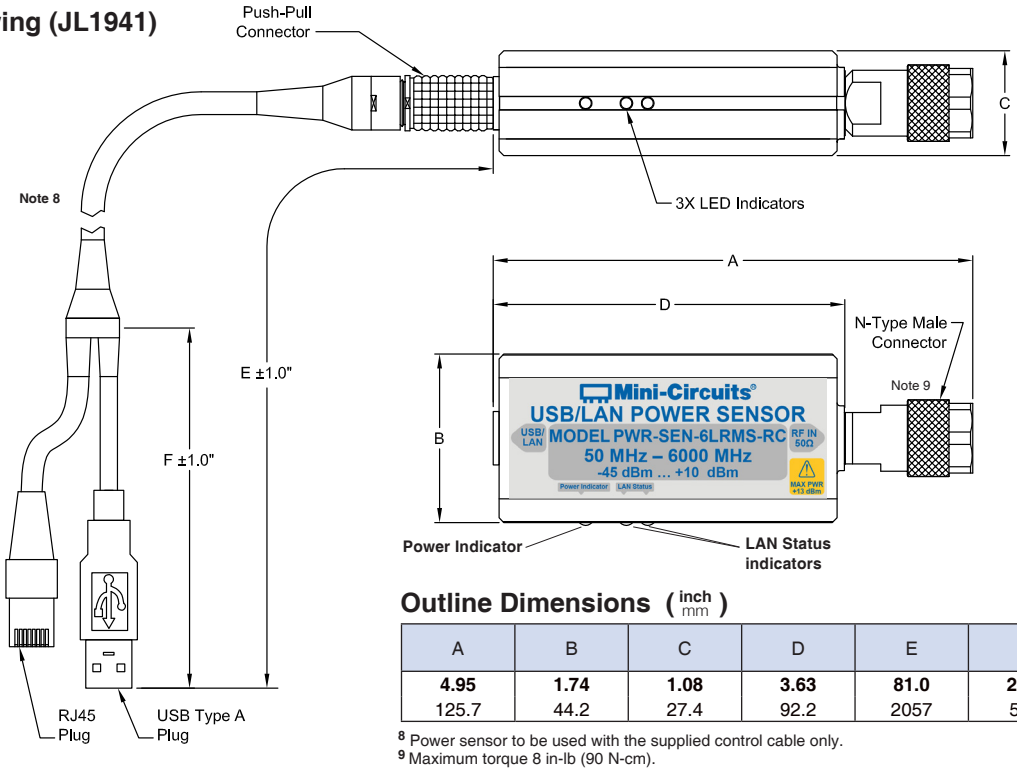

Outline Dimensions (inch / mm)

A	B	C	D	E	F	WT. GRAMS
4.95 125.7	**1.74** 44.2	**1.08** 27.4	**3.63** 92.2	**81.0** 2057	**20.0** 508	250

[8] Power sensor to be used with the supplied control cable only.
[9] Maximum torque 8 in-lb (90 N-cm).

Typical Performance Curves

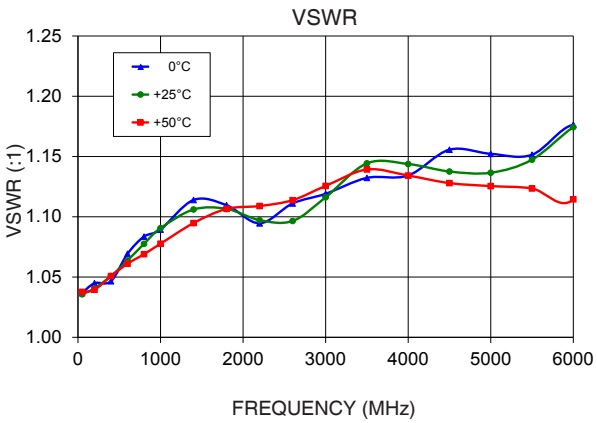

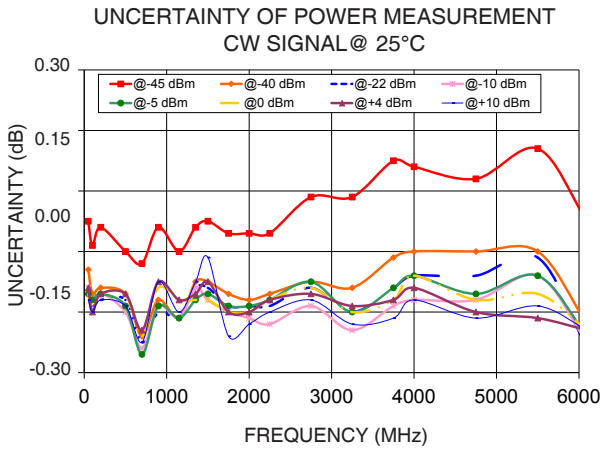

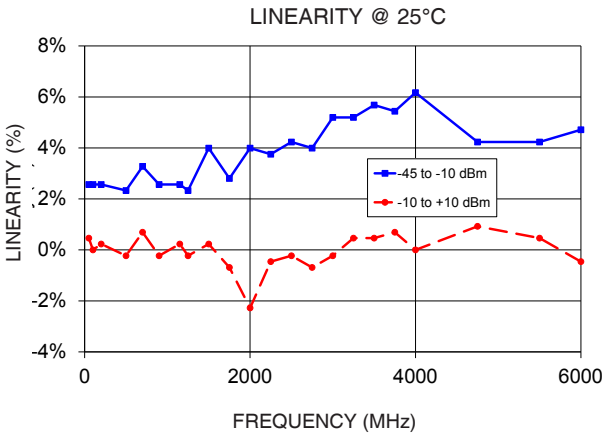

Typical Performance Curves (Continued)

UNCERTAINTY OF POWER MEASUREMENT
MODULATED SIGNALS @ 25°C, -40 dBm

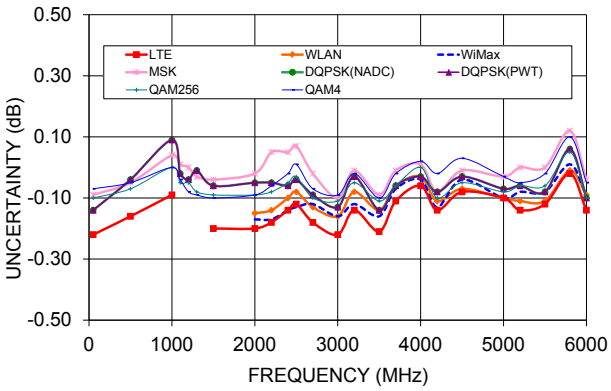

UNCERTAINTY OF POWER MEASUREMENT
MODULATED SIGNALS @ 25°C, -30 dBm

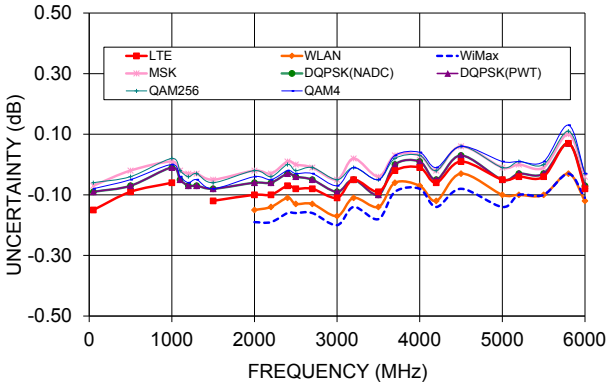

UNCERTAINTY OF POWER MEASUREMENT
MODULATED SIGNALS @ 25°C, -15 dBm

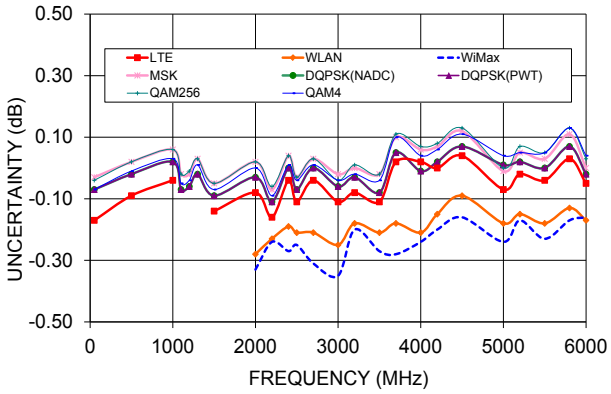

UNCERTAINTY OF POWER MEASUREMENT
MODULATED SIGNALS @ 25°C, 0 dBm

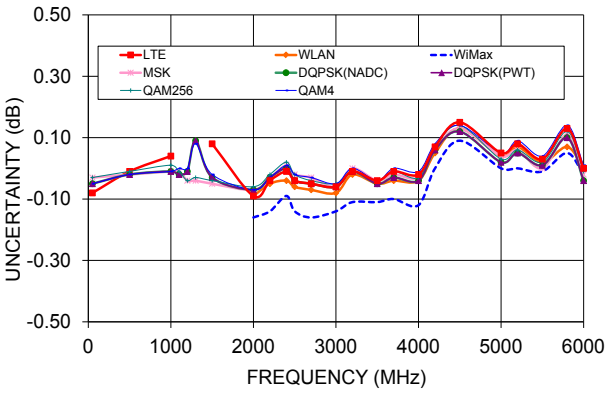

Connection diagrams

Connection diagram for USB control

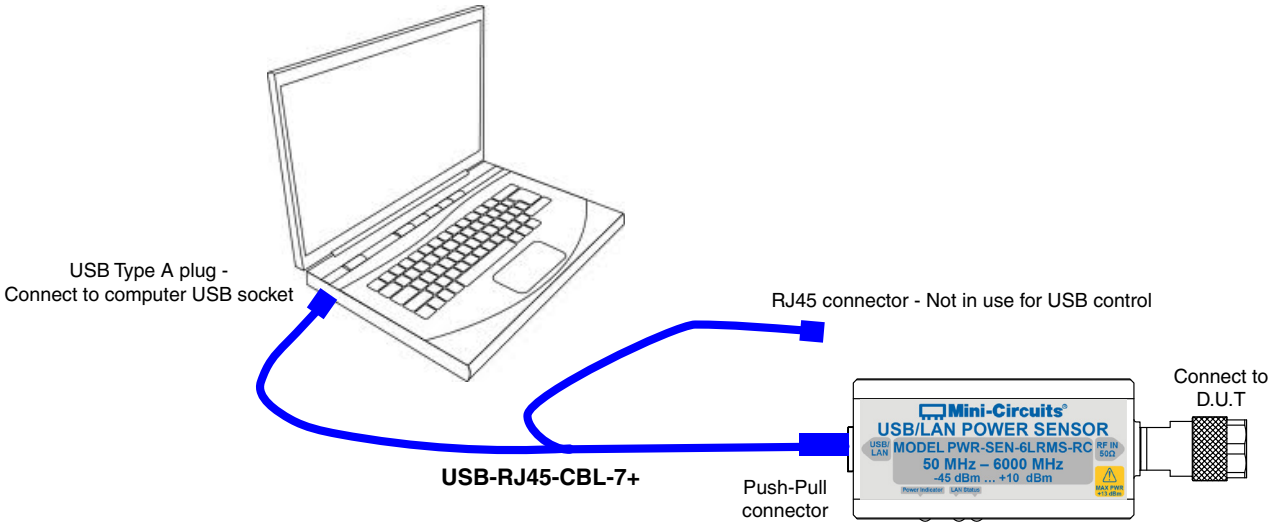

Connection diagram for Ethernet control, using power adapter

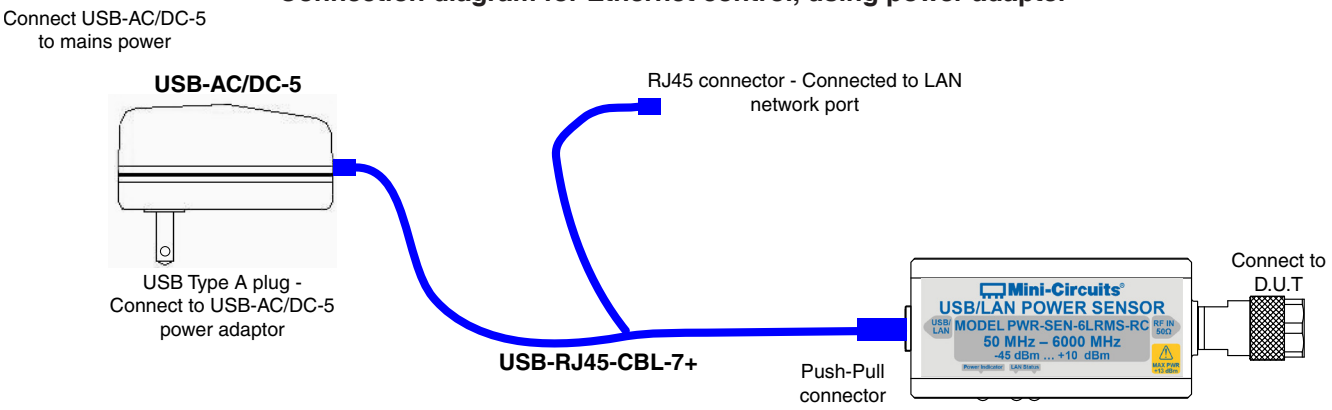

Connection diagram for Ethernet control, using PoE system

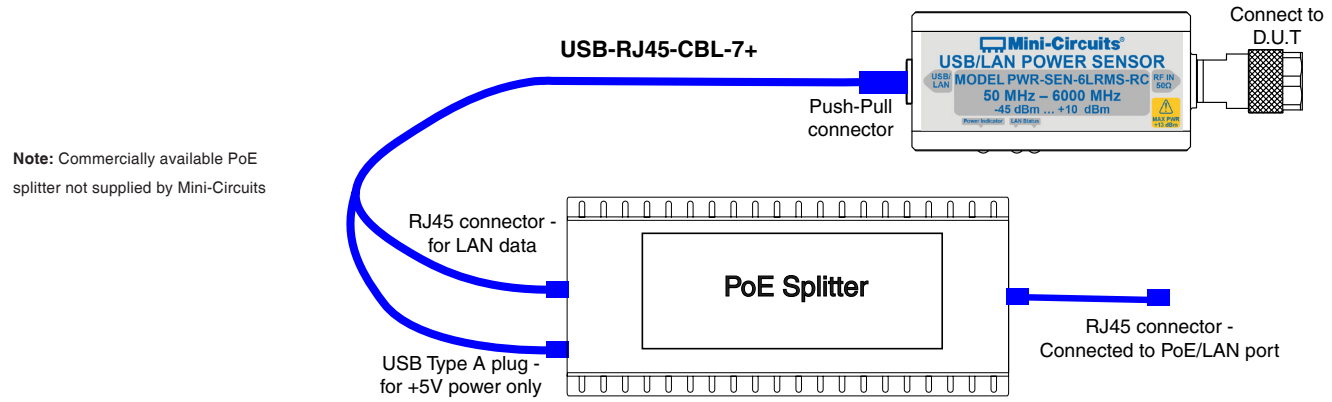

Note: Commercially available PoE splitter not supplied by Mini-Circuits

Ordering Information

Model	Description
PWR-6LRMS-RC	USB/Ethernet *Smart* True RMS Power Sensor

Included Accessories	Part No.	Description
	PWR-SEN-6LRMS-RC	Power Sensor Head
	USB-RJ45-CBL-7+	6.6 ft (2 m) "Y" data cable with USB Type-A and RJ45 plug connectors
	NF-SM50+	N-Type Female to SMA Male Adapter.

Optional Accessories	Description
PWR-SEN-CD[10]	Software CD
USB-AC/DC-5+[11]	AC/DC 5V_{DC} Power Adapter with US, EU, IL, UK, AUS, and China power plugs
USB-RJ45-CBL-7+ (spare)	6.6 ft (2 m) "Y" data cable with USB Type-A and RJ45 plug connectors
NF-SM50+(spare)	N-Type Female to SMA Male Adapter.
NF-SF50+	N-Type Female to SMA Female Adapter
NF-BM50+	N-Type Female to BNC Male Adapter.

[10] To receive the CD at no extra cost, request when placing order. CD contents can be downloaded from Mini-Circuits website at http://www.minicircuits.com/softwaredownload/pm.html

[11] Power plugs for other countries are also available, Plugs for other countries are also available, if you need a power plug for a countrynot listed please contact testsolutions@minicircuits.com.

Calibration	Description	
CALSN-6LRMS-RC	Calibration Service	Click Here

Additional Notes

A. Performance and quality attributes and conditions not expressly stated in this specification document are intended to be excluded and do not form a part of this specification document.

B. Electrical specifications and performance data contained in this specification document are based on Mini-Circuit's applicable established test performance criteria and measurement instructions.

C. The parts covered by this specification document are subject to Mini-Circuits standard limited warranty and terms and conditions (collectively, "Standard Terms"); Purchasers of this part are entitled to the rights and benefits contained therein. For a full statement of the Standard Terms and the exclusive rights and remedies thereunder, please visit Mini-Circuits' website at www.minicircuits.com/MCLStore/terms.jsp