Note: This datasheet may be out of date.
Please download the latest datasheet of PVG3A101C01B00 from the official website of Murata Manufacturing Co., Ltd.

http://www.murata.com/en/products/productdetail?partno=PVG3A101C01B00

# PVG3A101C01B00

Discontinued RoHS REACH

## Appearance & Shape



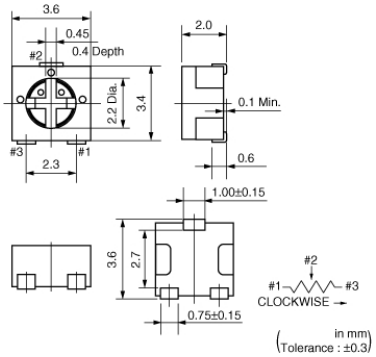


## Features

1. Sealed construction protects the interior from dust and liquid, which achieves stable performance.
2. Driver plate with cross-slot is suitable for automatic adjustment.
3. Rotor with large diameter and deep groove improves driver insertion.
4. 3mm and 4mm land pattern can be used without change. (Gull-wing is suitable for 4mm size land pattern.)

## Packaging Information

| Packaging | Specifications | Standard Packing Quantity |
|---|---|---|
| B00 | Bulk(Bag) | 500 |



**Attention**
1.This datasheet is downloaded from the website of Murata Manufacturing Co., Ltd. Therefore, it's specifications are subject to change or our products in it may be discontinued without advance notice. Please check with our sales representatives or product engineers before ordering.
2.This datasheet has only typical specifications because there is no space for detailed specifications.
Therefore, please review our product specifications or consult the approval sheet for product specifications before ordering.

Note: This datasheet may be out of date.
Please download the latest datasheet of PVG3A101C01B00 from the official website of Murata Manufacturing Co., Ltd.

http://www.murata.com/en/products/productdetail?partno=PVG3A101C01B00

# PVG3A101C01B00

## Specifications

| | |
|---|---|
| Power Rating | 0.25W |
| Shape | SMD |
| Maximum Working Voltage | 200Vdc |
| Adjustment Direction | Top |
| Size | 3mm |
| Auto Adjustment | Yes |
| Number of Turns (Effective Rotation Angle) | 1(210°±10°) |
| Mechanical Rotation Angle | 250+/-10 deg. |
| Total Resistance Value | 100Ω |
| Total Resistance Value Tolerance | ±20% |
| Temperature Coefficient of Resistance | ±150ppm/℃ |
| Resistance Taper | B(Linear) |
| Contact Resistance Variation | 2% of standard total resistance or 3ohm max., whichever is greater |
| Residual Resistance | 1% od standard total resistance or 2ohm max., whichever is greater |
| Torque | 4.9mN・m max. |
| Measure Condition of RatedPower | 70℃ |
| Operating Temperature Range | -55℃ to 125℃ |
| Mass | 0.06g |



**Attention**
1.This datasheet is downloaded from the website of Murata Manufacturing Co., Ltd. Therefore, it's specifications are subject to change or our products in it may be discontinued without advance notice. Please check with our sales representatives or product engineers before ordering.
2.This datasheet has only typical specifications because there is no space for detailed specifications.
Therefore, please review our product specifications or consult the approval sheet for product specifications before ordering.

Note: This datasheet may be out of date.
Please download the latest datasheet of PVG3A101C01B00 from the official website of Murata Manufacturing Co., Ltd.

http://www.murata.com/en/products/productdetail?partno=PVG3A101C01B00

# PVG3A101C01B00

## Product Data

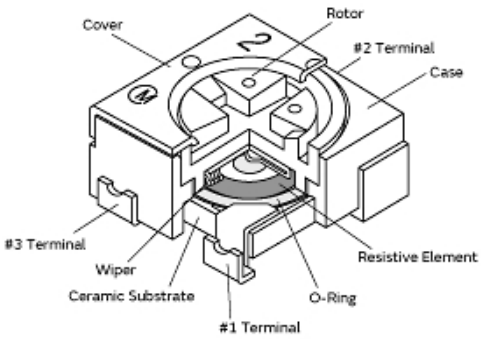


Constructions



**Attention**
1.This datasheet is downloaded from the website of Murata Manufacturing Co., Ltd. Therefore, it's specifications are subject to change or our products in it may be discontinued without advance notice. Please check with our sales representatives or product engineers before ordering.
2.This datasheet has only typical specifications because there is no space for detailed specifications.
Therefore, please review our product specifications or consult the approval sheet for product specifications before ordering.