Note: This datasheet may be out of date.
Please download the latest datasheet of PVG3A100C01B00 from the official website of Murata Manufacturing Co., Ltd.

http://www.murata.com/en/products/productdetail?partno=PVG3A100C01B00

PVG3A100C01B00

Discontinued RoHS REACH

Appearance & Shape



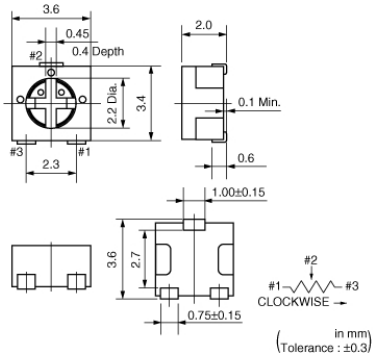

Features

1. Sealed construction protects the interior from dust and liquid, which achieves stable performance.
2. Driver plate with cross-slot is suitable for automatic adjustment.
3. Rotor with large diameter and deep groove improves driver insertion.
4. 3mm and 4mm land pattern can be used without change. (Gull-wing is suitable for 4mm size land pattern.)

Packaging Information

Packaging	Specifications	Standard Packing Quantity
B00	Bulk(Bag)	500

Attention
1.This datasheet is downloaded from the website of Murata Manufacturing Co., Ltd. Therefore, it's specifications are subject to change or our products in it may be discontinued without advance notice. Please check with our sales representatives or product engineers before ordering.
2.This datasheet has only typical specifications because there is no space for detailed specifications.
Therefore, please review our product specifications or consult the approval sheet for product specifications before ordering.

Note: This datasheet may be out of date.
Please download the latest datasheet of PVG3A100C01B00 from the official website of Murata Manufacturing Co., Ltd.

http://www.murata.com/en/products/productdetail?partno=PVG3A100C01B00

PVG3A100C01B00

Specifications

Power Rating	0.25W
Shape	SMD
Maximum Working Voltage	200Vdc
Adjustment Direction	Top
Size	3mm
Auto Adjustment	Yes
Number of Turns (Effective Rotation Angle)	1(210°±10°)
Mechanical Rotation Angle	250+/-10 deg.
Total Resistance Value	10Ω
Total Resistance Value Tolerance	±20%
Temperature Coefficient of Resistance	±150ppm/℃
Resistance Taper	B(Linear)
Contact Resistance Variation	2% of standard total resistance or 3ohm max., whichever is greater
Residual Resistance	1% od standard total resistance or 2ohm max., whichever is greater
Torque	4.9mN・m max.
Measure Condition of RatedPower	70℃
Operating Temperature Range	-55℃ to 125℃
Mass	0.06g

Attention
1.This datasheet is downloaded from the website of Murata Manufacturing Co., Ltd. Therefore, it's specifications are subject to change or our products in it may be discontinued without advance notice. Please check with our sales representatives or product engineers before ordering.
2.This datasheet has only typical specifications because there is no space for detailed specifications.
Therefore, please review our product specifications or consult the approval sheet for product specifications before ordering.

Note: This datasheet may be out of date.
Please download the latest datasheet of PVG3A100C01B00 from the official website of Murata Manufacturing Co., Ltd.

http://www.murata.com/en/products/productdetail?partno=PVG3A100C01B00

PVG3A100C01B00

Product Data

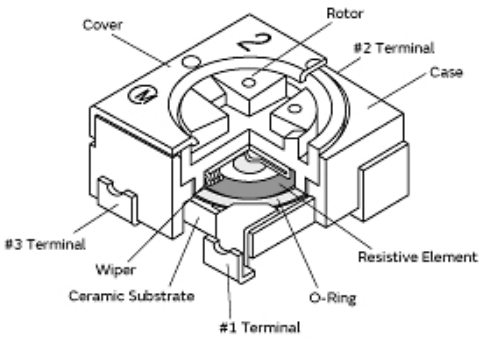

Constructions

Attention
1.This datasheet is downloaded from the website of Murata Manufacturing Co., Ltd. Therefore, it's specifications are subject to change or our products in it may be discontinued without advance notice. Please check with our sales representatives or product engineers before ordering.
2.This datasheet has only typical specifications because there is no space for detailed specifications.
Therefore, please review our product specifications or consult the approval sheet for product specifications before ordering.