PUP 150 Series

150 WATTS SINGLE OUTPUT AC/DC GENERAL

Features

- **High Efficiency.**
- **Low ripple and noise.**
- **Short circuit protection.**
- **Overvoltage protection.**
- **Over power protection.**
- **Over temperature protection.**
- **100% burn-in at full rated load.**
- **Standby consumption less than 1.0W.**
- **MEPS compliance.**



Specifications

INPUT

Input voltage	100-264Vac.
Frequency	47Hz–63Hz
Input current	1.60A @ 115V, 0.8A @ 230V
Leakage current	150µA max. @ 115Vac. 60Hz. 250µA max. @ 230Vac. 50Hz.
Insulation	Input – Output: 3000Vac Input – Ground: 1500Vac Output – Ground: 500Vac
Inrush current	No damage.

OUTPUT

Output voltage	See table
Output current	See table
Ripple & noise	380mV p-p max.
Line regulation	±0.5% maximum at full load.
Load regulation	See table
Transient response	Max. deviation 4% recovering to 1% within 500µs after 25% load charge
Overvoltage protection	Provided on V1 only. Set at 110%–140% of nominal.
Overcurrent protection	All outputs protected for short circuit conditions
Temperature coefficient	All outputs ±0.04% per °C.
Holdup time	Typically 3 ms at 110Vac.

OPERATING

MTBF	100,000 hrs @ 25°C.
Efficiency	88% minimum.
Power factor	>0.9

ENVIRONMENTAL

Operating temperature	0°C to 40°C.
Storage temperature	-20°C to 85°C
Relative humidity	10%–95% non-condensing

STANDARDS AND APPROVALS

Safety	UL60950-1, CSA C22.2 No. 60950, Nemko EN60950: 2000 (pending)
C-Tick	AS/NZS CISPR11 Group 1 Class A
EMC standards	EN55024, EN55022-B, FCC-B, VCCI-B, EN61000-3-2, -3, EN61000-4-2, -3, -4, -5, -6, -8, -11.

MECHANICAL

Dimensions	171x72x40mm
Weight	0.8kgs approx.

PUP 150 Series

150 WATTS SINGLE OUTPUT AC/DC GENERAL

Selection Table

MODEL	OUTPUT #1				MAX. OUTPUT
NUMBER	VNOM	IMIN	IMAX	TOL	POWER
PUP150-12	12V	0A	12.5A	5%	150W
PUP150-13	15V	0A	10.0A	5%	150W
PUP150-13-2	19V	0A	7.89A	5%	150W
PUP150-13-3	20V	0A	7.5A	5%	150W
PUP150-14	24V	0A	6.25A	5%	150W

NOTES: Ripple and noise : Peak-to-peak with 20MHz bandwidth and 47μF tantalum capacitor in paralllel with a 0.1μF ceramic capacitor at rated line voltage and load ranges.

Pin Chart

MODEL/PIN		1	2	3	4	SHELL OF CONNECTOR
PUP150-12 PUP150-13 PUP150-13-2	PUP150-13-3 PUP150-14	Output +V	Output +V	Return	Return	Return

Technical Illustrations

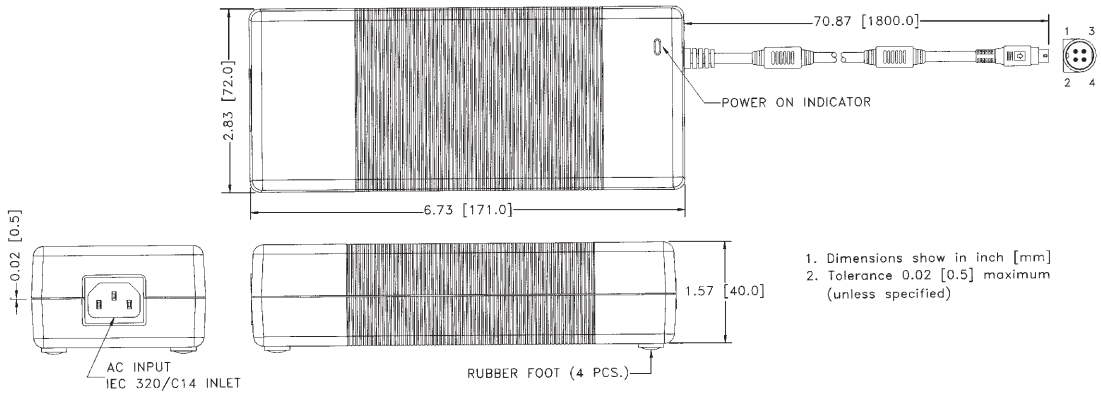

Notes:
1. Dimensions show in inch [mm]
2. Tolerance 0.02 [0.5] maximum
3. Weight: 800 grams approx.