PTS125 Series
12 mm Tact Switches



Features/Benefits

- ***Stable control feeling***
- ***Thru-hole or vertical actuation***
- ***160 or 260 grams actuation force***

Typical Applications

- ***Consumer products***
- ***Instrumentation***
- ***Computer products***
- ***Industrial***

Specification
FUNCTION: Momentary action
CONTACT ARRANGEMENT: SPST, N.O.
TERMINALS: PC pins

Mechanical
ACTUATION FORCE: PTS125M models: 160 grams.
PTS125 K models: 260 grams.
LIFE EXPECTANCY: 200,000 operations.

Electrical
CONTACT RATING: 50 mA @ 12 V DC.
DIELECTRIC STRENGTH: 250 V AC min.
CONTACT RESISTANCE: 100 mΩ max. initial.
INSULATION RESISTANCE: 10^{11} Ω min.

NOTE: Specifications listed above are for switches with standard options.
For information on specific and custom switches, consult Customer Service Center.

Environmental
OPERATING TEMPERATURE: -40˚C to 60˚C

Process
SOLDERING: Preheating to 100˚C for 45 sec. max. Keep flux flush with top surface of PCB; do not apply to component side of PCB and area where terminals are located. Soldering to 255˚C for 5 sec. max. Clean by brushing on solder surface. Do not clean switch with solvents.

Materials
BASE: 6/6 nylon or glass filled polyester (PBT) (UL 94V-0).
ACTUATOR: PBT (UL94V0) or polyacetal (UL 94HB).
COVER PLATE: PTS645S: Polyester.
PTS645V: Tin alloy.
DOME CONTACTS: Phosphor bronze, silver clad.
STATIONARY CONTACTS: Brass, silver plated.
TERMINALS: Brass, silver plated. Insert molded.

Packaging
Tape and reel

How To Order

Our easy build-a-switch concept allows you to mix and match options to create the switch you need. To order, select desired option from each category and and place it in the appropriate box.

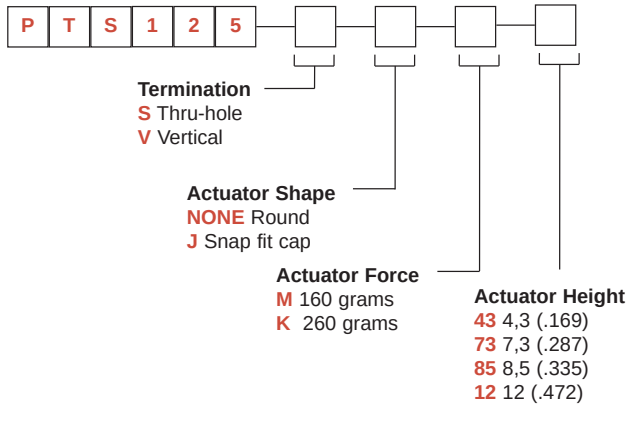

SERIES





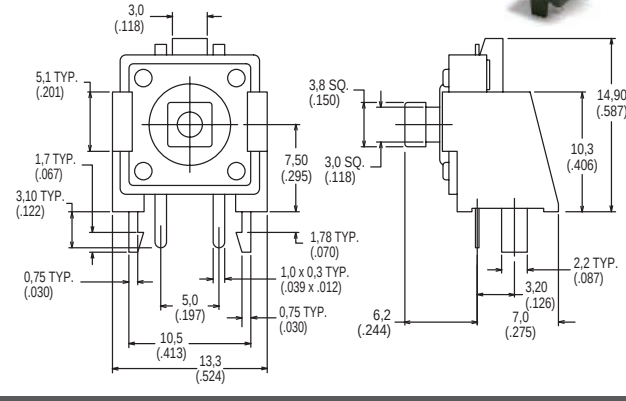

TERMINATION

S THRU-HOLE

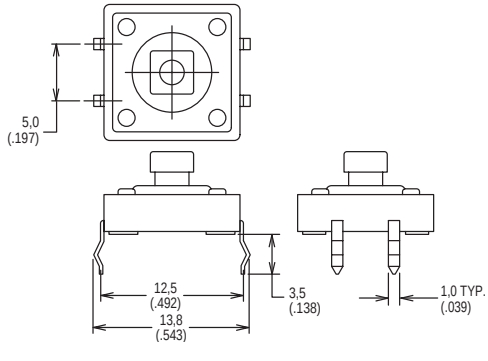

PCB LAYOUT

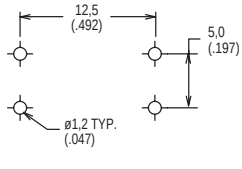

V VERTICAL

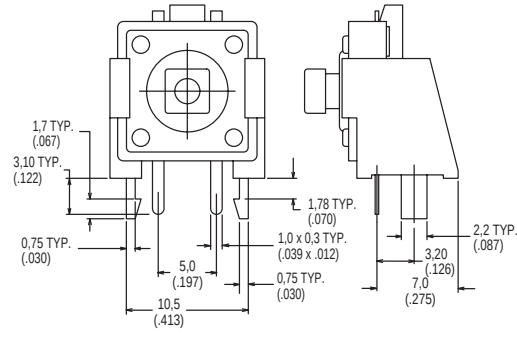

PCB LAYOUT

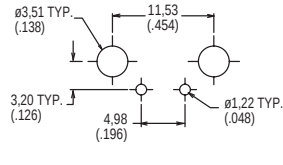

ACTUATOR SHAPE

NONE ROUND

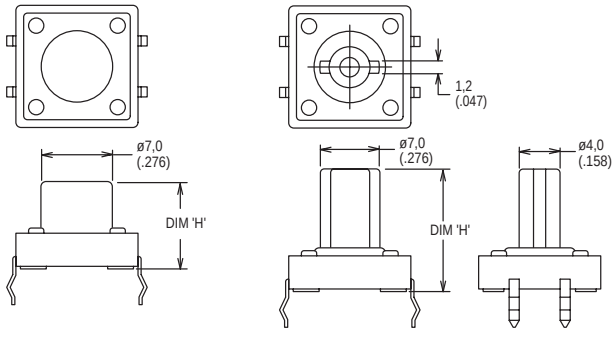

J SNAP-FIT CAP

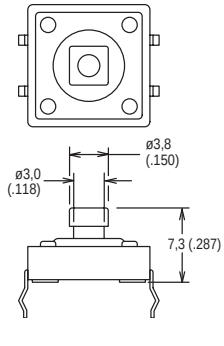

PTS125 Series
12 mm Tact Switches

ACTUATION FORCE

OPTION CODE	FORCE
M	160 grams
K	260 grams

ACTUATOR HEIGHT

43 4,3 mm

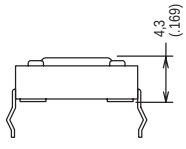

73 7,3 mm Snap-fit

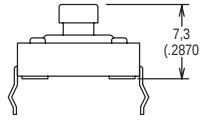

85 8,5 mm

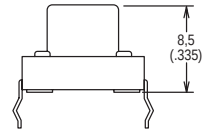

12 12 mm

