PTN5150H

CC logic for USB Type-C applications

Rev. 1 — 9 December 2016 Product data sheet

1. General description

PTN5150H is a small thin low power CC Logic chip supporting the USB Type-C connector application with Configuration Channel (CC) control logic detection and indication functions. The features of PTN5150H enable USB Type-C connector to be used in both host and device ends of the Type-C cable. It can support Type-C to USB legacy cables and adapters defined in USB Type-C Spec. PTN5150H can work autonomously, or can connect to a controller through I^2C-bus interface.

PTN5150H can be configured to dual role, host, or device mode through external configuration pin or through I2C interface. The CC control logic detection and indication block supports 3 current modes (default current 500 mA/900 mA, medium current 1.5 A and high current 3.0 A) in DFP advertisement's perspective. When in UFP advertisement's perspective, the control logic will detect if a DFP with different pull-up Rp current source is connected. In addition, it will detect if Ra is present on CC1/CC2 pins. Upon detection of plug orientation, pin ID will indicate if PTN5150H is working under either host role or device role, and other status will also be reflected in I2C registers.

2. Features and benefits

- Support type C connector with existing chipsets
  - USB Type-C Rev 1.1 compliance
  - Compatible with legacy OTG hardware and software
  - Support plug, orientation, role and charging current detection.
  - USB-ID pin for OTG application
  - I^2C-bus interface support for fast mode
- CC control logic detection and indication
  - PORT input pin to configure in DRP (Hi-Z), UFP (low) or DFP (high)
  - Current mode detection when PTN5150H is operating under UFP (device) role: default current mode (<0.5 A/0.9 A); medium current mode (<1.5 A); high current mode (<3.0 A)
  - Integrated accurate Rp current sources to support default mode and high current mode under host mode: default current mode at 80 μA; medium current mode at 180 μA; high current mode at 330 μA
  - Integrate Rd resistor in UFP mode
  - Report detail port states and accessory modes in I2C registers
  - Support VCONN1/2 power detected status through VCONN Status I2C register 0AH
- Current consumption:
  - Hibernation mode: 4.5 μA
  - Standby in DRP mode: 15 μA

- Standby in DFP mode: 15 μA
- Standby in UFP mode: 15 μA

- Power supply: VDD=2.7 V to 5.5 V
- VBUS_DET: 28 V Absolute Max Tolerance
- High ESD protection for VBUS and CC1/2 pins
  - ESD protection exceeds 7000 V HBM per JDS-001-2012 and 500 V CDM per JESD22-C101
- Latch-up testing is done to JEDEC Standard JESD78 which exceeds 100 mA
- Operating Temperature Range: −40 °C to +85 °C
- X2QFN12 package 1.6 mm × 1.6 mm × 0.35 mm, 0.4 mm pitch

3. Applications

- Tablets/Mobile Devices
- Ultrabook/Notebook Computers
- Docking Stations

4. Ordering information

Table 1. Ordering information

Type number	Topside marking	Package		
		Name	Description	Version
PTN5150HHX	5H	X2QFN12	Plastic, super thin quad flat package; no leads; 12 terminals; body 1.6 mm × 1.6 mm × 0.35 mm, 0.4 mm lead pitch	SOT1355-1

4.1 Ordering options

Table 2. Ordering options

Type number	Orderable part number	Package	Packing method	Minimum order quantity	Temperature
PTN5150HHX	PTN5150HHXMP	X2QFN12	REEL 13" Q2/T3 *STANDARD MARK SMD DP	10000	T_{amb} = −40 °C to +85 °C

All information provided in this document is subject to legal disclaimers.

© NXP Semiconductors N.V. 2016. All rights reserved.

5. Functional diagram

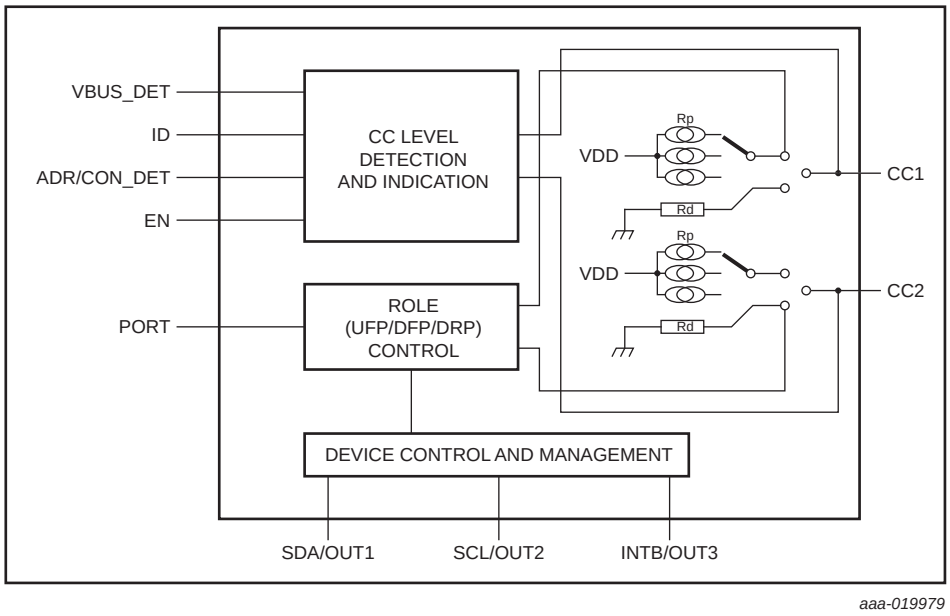

Fig 1. Functional diagram of PTN5150H

6. Pinning information

6.1 Pinning

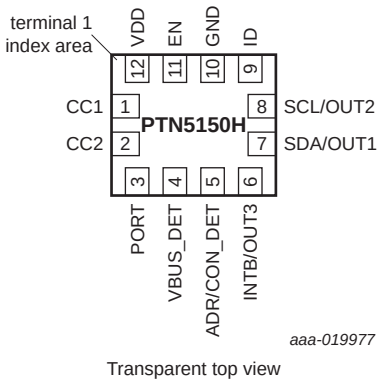

Transparent top view

Fig 2. Pin configuration

All information provided in this document is subject to legal disclaimers.

© NXP Semiconductors N.V. 2016. All rights reserved.

6.2 Pin description

Table 3. Pin description

Symbol	Pin	Type	Description
1	CC1	I/O	Configure Channels as defined in USB Type-C specification
2	CC2		
3	PORT	Input	Trinary GPIO Input selection run from VDD PORT= VDD: DFP mode (Rp = 80 uA power default for non-I2C mode). PORT= Mid (or floating): DRP mode PORT=GND: UFP mode If ADR = High or Low (I2C mode), PORT input status will be only latched during power up. To change the mode selection, system must write I2C register bit to override mode selection. If ADR = Mid (no- I2C mode). PORT input can be dynamically change.
4	VBUS_DET	Input	VBUS Detection Pin. (28 V Max Tolerance) One 1 MΩ ± 1 % external resistor required between system Vbus and VBUS_DET pin
5	ADR/CON_DET	I/O	Trinary GPIO Input ADR pin run from VDD • ADR pull up to VDD with 10 kΩ resistor (I2C Enabled with ADDR bit 6 equal to 1, I2C Address 0x7C) • ADR pull down to GND with 10 kΩ resistor. (I2C Enabled with ADDR bit 6 equal to 0, I2C Address 0x3C) • ADR = Mid or floating (Pin 6/7/8) configured as OUT1/2/3 in non-I2C mode Output. This pin will automatically switch from input to CON_DET output in "non-I2C mode or set 09H bit[0] to 0" after TINPUTLATCH • CON_DET = High (Connection Detected) • CON_DET = Low (No Connection)
6	INTB/OUT3	O/D output	Interrupt to notify I2C status register changed INTB: (only valid in I2C mode) • Low = Interrupt asserted • Hi-Z = Interrupt de-asserted OUT3: (only valid in non- I2C mode) • Low = Analog Audio Detected • Hi-Z = No Detection
7	SDA/OUT1	O/D Input /output	I2C SDA (Open Drain Input & Output) OUT 2 & OUT 1 : (Open Drain Output) 0 0 = high current mode 1 0 = medium current mode 1 1 = default current mode
8	SCL/OUT2	O/D Input /output	I2C SCL (Open Drain Input) OUT 2 & OUT 1 : (Open Drain Output) 0 0 = high current mode 1 0 = medium current mode 1 1 = default current mode
9	ID	O/D output	ID (Open Drain Output) Low = DFP mode detected valid UFP on CC1 or CC2 line. This signal is used to enable OTG mode, requires external pull up resistor.

All information provided in this document is subject to legal disclaimers.

© NXP Semiconductors N.V. 2016. All rights reserved.

Table 3. Pin description *…continued*

Symbol	Pin	Type	Description
10	GND	Power	Ground
11	EN	Input	Chip Enable and Disable • High = Chip Enable • Low = Chip disable or hibernation mode. When chip is placed under hibernation mode, I2C configuration register (02H, 09H, 18H) contents are retained.
12	VDD	Power	Power supply

7. Functional description

7.1 CC detection and indication block

For USB Type-C solution, two pins on the connector, CC1 and CC2, are used to establish and manage the DFP/UFP connection between a host port and a device port.

A hardware GPIO trinary pin, PORT, is provided to configure PTN5150H in either DFP/DRP/UFP mode alternatively, the PORT input can be override later by override the I2C registers. If the GPIO Trinary ADR input is mid-level or floating (non I2C), PORT input pin can dynamically change at any time to reconfigure the DFP/DRP/UFP. The GPIO trinary input pins should be powered by VDD.

- When PTN5150H is operating under host role, different current modes (high/medium/default) can be configured through I2C register. During initial power up, default current mode is being selected. In order to indicate different current modes, three Rp current sources are being implemented.

Table 4. Current source implementation for each DFP advertisement

DFP advertisement	Current source to VDD	Current source precision
Default USB Power	80 μA	±20 %
1.5 A at 5 V	180 μA	±8 %
3.0 A at 5 V	330 μA	±8 %

Internal comparators are constantly monitoring the voltage levels of CC1 and CC2 pins. PTN5150H reports if an UFP (device) or powered cable is connected externally on the CC pins. When no external connection is detected, cable connected bit in the I2C register will be cleared. Any changes in the attach/detach events or Rp current source changes will trigger INTB pin to go LOW.

Table 5. RD implementation for each UFP advertisement

UFP advertisement	RD value	RD accuracy
UFP mode	5.1 kΩ	±10 %

Table 6. Voltage range detection for each DFP advertisement

DFP advertisement	UFP (V_{Rd}) voltage range	Powered cable/adapter V_{Ra} voltage range	No connect (V_{open}) voltage range
Default USB Power	0.25 V to 1.50 V	0.00 V to 0.15 V	>1.65 V
1.5 A at 5 V	0.45 V to 1.50 V	0.00 V to 0.35 V	>1.65 V
3.0 A at 5 V	0.85 V to 2.45 V	0.00 V to 0.75 V	>2.75 V

All information provided in this document is subject to legal disclaimers.

© NXP Semiconductors N.V. 2016. All rights reserved.

- When PTN5150H is operating under device role (UFP), it is able to detect different current modes indicated by external host's pull-up resistors. Internally there is a pull-down resistor (Rd) of 5.1 kΩ on CC1 and CC2 pins. Status of current mode detected is reported in the I2C register. If pin 6/7/8 is configured as OUT1/2/3, OUT1/2 reports the detected Rp pull up current source value as well.

The configuration channel (CC1 or CC2) is used to serve the following purposes in this block

- Detect connection of USB ports, e.g. a DFP (host) or a UFP (device), and establish host or device roles between two connected ports. When there is no power supplied to PTN5150H, device role (with internal pull-down resistor Rd active) will be the default configuration.
- Resolve cable orientation and twist connections to establish USB data bus routing.
- Discover optional accessory modes such as audio adapter accessory and debug accessory modes. Resistors (Ra, Rd, Rp, or Open) connected on CC1/CC2 will be reported in the I2C registers, and host controller can configure the external interface accordingly.

7.2 ADR/CON_DET output pin

Pin 5 is multiple purpose I/O pin. When device power up, pin 5 is input which latched the input voltage level to configure I2C address. The I2C register offset 09H has default value "1" to disable CON_DET output. After TINPUT_LATCH, pin 5 becomes CON_DET output. When USB Type-C cable attached or detached in either DFP or UFP mode, CON_DET will asserted a signal to notify the system the status. The same attached or detached status also stored in the I2C interrupt register.

For ADR strapping resistor selection, 10 kΩ pull up or pull down resistor is recommended.

7.3 VCONN1/VCONN2 power output control

When a USB Type-C system need to support VCONN power in DFP or UFP power accessories mode, the system need to know the orientation to provide VCONN power. PTN5150H provides two bits of VCONN status register 0AH and an interrupt signal to notify system whether VCONN power is detected on VCONN1 or VCONN2 and then turn on discrete PowerFET using via 2 x GPIO. Figure 3 shows the system level implementation of VCONN power with PTN5150H.

All information provided in this document is subject to legal disclaimers.

© NXP Semiconductors N.V. 2016. All rights reserved.

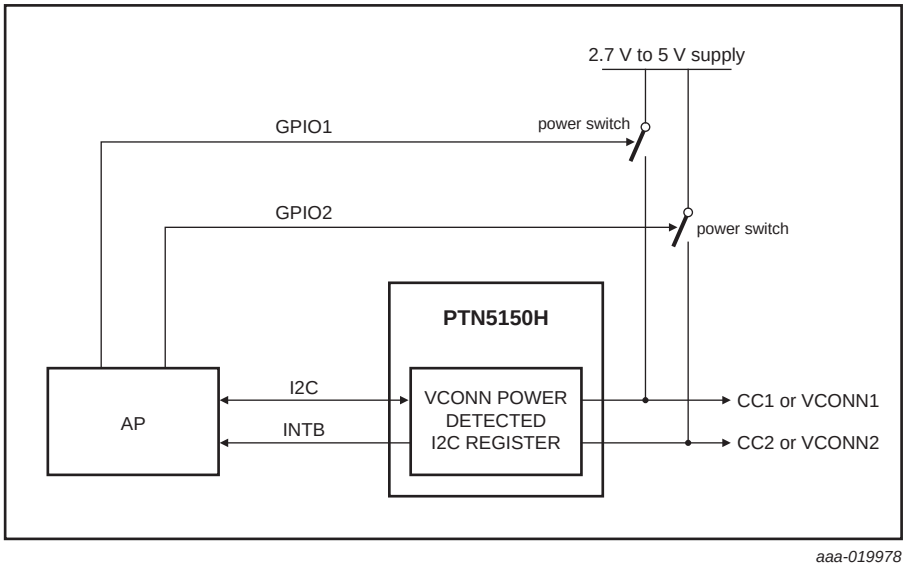

Fig 3. Schematic connections to turn on/off VCONN1/2 power

7.4 Off state

When PTN5150H is not powered (i.e., VDD = 0 V), special steps should be done to prevent back-current issues on control pins such PORT or ADR pins when these pins' states are not low. These pins can be controlled through two different ways.

1. pull-up/pull-down resistors - make sure these pull-up resistors' VDD is the same power source as to power PTN5150H. When power to PTN5150H is off, power to these pull-up resistors will be off as well.
2. external processor's GPIO - if PTN5150H is turned off when the external processor's power stays on, processor should configure these GPIOs connected to these control pins as output low (< 0.4 V) or tri-state mode (configure GPIOs as input mode). This will make sure no current will be flowing into PTN5150H through these control pins.

7.5 I²C-bus

PTN5150H can work with systems with or without I²C-bus. “I2C mode” is defined as ADR pin has external 10 kΩ pull-up or pull-down resistor during power up, and “non-I2C mode” is defined as ADR pin is not connected to any external pull-up or pull-down resistor during power up. When operating in I2C mode, all features of PTN5150H can be configured and accessed through registers. OUT1, OUT2, OUT3 are not available in I2C mode. PORT input will be a one-time latched during power up.

In non-I2C mode, a subset of features can be configured or accessed through these I/O pins:

- PORT input: In non I²C-bus mode, PORT input can be dynamically change.
- CON_DET output: attached/detached notification
- OUT1/OUT2 output: detected Rp current source value
- OUT3: Analog Audio Detect

All information provided in this document is subject to legal disclaimers.

© NXP Semiconductors N.V. 2016. All rights reserved.

7.6 I²C-bus programmability

PTN5150H has I²C-bus interface that enables system integrator to program register settings suitable for the application needs. Table 7 describes possible settings for different functions of the device. Although some functions of the device can be configured through external hardware pins (such as PORT), it also allows the system integrator to override the settings by programming the internal registers through I2C.

After power-on, the device samples the hardware pin values (as I2C is not operational yet) and reflects the status in the I2C status registers as default condition.

Table 7. I2C registers and descriptions

Register offset	Register name	Bits	Reset value	Description
01H Read Only	Version ID	[7:3]	00001	Device version ID
	Vendor ID	[2:0]	011	Vendor ID
02H Read/Write	Control	[7:5]	000	Reserved
		[4:3]	00	Rp Selection (DFP mode) 00: 80 μA Default 01: 180 μA Medium 10: 330 μA High 11 Reserved
		[2:1]	PORT pin state	Mode Selection 00: Device (UFP Mode) 01: Host (DFP Mode) 10: Dual Role (DRP Mode) During power up, device will latch the input of PORT input pin to configure UFP/DFP/DRP. After power up, writing to these register bits will overwrite the PORT Mode selection.
		[0]	0	Interrupt Mask for detached/attached 0: Does not Mask Interrupts 1: Mask Interrupts for register offset 03H bit[1:0].
03H Read Only/Clear on Read	Interrupt Status	[7:2]	000000	Reserved
		[1]	0	Cable Detach Interrupt 0: No Interrupt 1: Cable Detached
		[0]	0	Cable Attach Interrupt 0: No Interrupt 1: Cable Attached

All information provided in this document is subject to legal disclaimers.

© NXP Semiconductors N.V. 2016. All rights reserved.

Table 7. I2C registers and descriptions *…continued*

Register offset	Register name	Bits	Reset value	Description
04H Read Only	CC Status	[7]	0	VBUS Detection (UFP mode after valid CC detection) 0: VBUS not detected 1: VBUS detected
		[6:5]	00	Rp Detection (In UFP mode) 00: Standby 01: Rp = Std USB 10: Rp = 1.5A 11: Rp = 3.0A
		[4:2]	000	Port Attachment Status 000: Not Connected 001: DFP attached 010: UFP attached 011: Analog Audio Accessory attached 100: Debug Accessory attached 101: Reserved 110: Reserved 111: Reserved
		[1:0]	00	CC Polarity 00: Cable Not Attached 01: CC1 is connected (normal orientation) 10: CC2 is connected (reversed orientation) 11: Reserved
05H	Reserved	[7:0]	00000000	Reserved
06H	Reserved	[7:0]	00000000	Reserved
07H	Reserved	[7:0]	00000000	Reserved
08H	Reserved	[7:0]	00000000	Reserved
09H Read/Write	CON_DET configuration register	[7:1]	0000000	Reserved
		[0]	1	Disable CON_DET output bit (Read/Write) 0: Enable CON_DET output on pin 5 1: Disable CON_DET output on pin 5 Recommend to disable CON_DET output for system using I2C to access PTN5150H

All information provided in this document is subject to legal disclaimers.

© NXP Semiconductors N.V. 2016. All rights reserved.

Table 7. I2C registers and descriptions *…continued*

Register offset	Register name	Bits	Reset value	Description
0AH Read Only	VCONN Status register	[7:2]	000000	Reserved
		[1:0]	00	VCONN Detected Status (Read Only) 00: Standby 01: VCONN power should be applied on CC1 10: VCONN power should be applied on CC2 11: Reserved Ra detect happens in all modes. VCONN enable happens autonomously when as DFP (including in DRP mode). Prior to accessing this register, system must write register offset 43H with value of 0xe0 to enable VCONN detected status. If register offset 43H is not set to 0xe0, VCONN detected status read out is always 00.
10H	Reset register	[7:1]	0000000	Reserved.
		[0]	0	1: Reset system digital block
11H	Reserved	[7:0]	00001100	Reserved. Do not write any other values other than “00001100” (power up setting) to this register
12H	Reserved	[7:0]	000000	Reserved.
13H	Reserved	[7:0]	10100001	Reserved. Do not write to this register
14H	Reserved	[7:0]	00011111	Reserved. Do not write to this register
15H	Reserved	[7:0]	11001001	Reserved. Do not write to this register
16H	Reserved	[7:0]	01010001	Reserved. Do not write to this register
17H	Reserved	[7:0]	01010000	Reserved. Do not write to this register
18H Read/Write	Interrupt Mask register	[7]	0	Reserved
		[6]	0	Reserved
		[5]	0	Reserved
		[4]	1	Interrupt Mask for CC1 or CC2 Comparator Change 0: Does not Mask Interrupts 1: Mask Interrupts
		[3]	1	Interrupt Mask for role Change 0: Does not Mask Interrupts 1: Mask Interrupts
		[2]	1	Interrupt Mask for orientation Found 0: Does not Mask Interrupts 1: Mask Interrupts
		[1]	1	Interrupt Mask for debug Accessories Found 0: Does not Mask Interrupts 1: Mask Interrupts
		[0]	1	Interrupt Mask for audio Accessories Found 0: Does not Mask Interrupts 1: Mask Interrupts

All information provided in this document is subject to legal disclaimers.

© NXP Semiconductors N.V. 2016. All rights reserved.

Table 7. I2C registers and descriptions *…continued*

Register offset	Register name	Bits	Reset value	Description
19H Read Only/Clear on Read	Interrupt Register status	[7]	0	Reserved
		[6]	0	Reserved
		[5]	0	Reserved
		[4]	0	Interrupt Status for Comparator Change 0: No interrupt 1: When attached as UFP, Change of Rp current advertisement detected. New advertisement is reflected on register offset 04H bit[6:5].
		[3]	0	Interrupt status for role change 0: No interrupt 1: Role changed detected. New role is reflected on register offset 04H bit[4:2].
		[2]	0	Interrupt status for orientation found 0: No interrupt 1: Orientation detected on attachment. New orientation is reflected on register offset 04H bit[1:0].
		[1]	0	Interrupt status for debug accessories found 0: No interrupt 1: Debug Accessory attachment detected. Register offset 04H bit[4:2] should be updated to 3'b100.
		[0]	0	Interrupt status for audio accessories found 0: No interrupt 1: Audio Accessory attachment detected. Register offset 04H bit[4:2] should be updated to 3'b011.

7.7 I²C-bus read and write operations

PTN5150H supports programming of the internal registers through the I²C-bus interface. I²C-bus can support up to 400 kHz data rate. 8-bit device slave address of PTN5150H is defined in combination with ADR pin.

Table 8. Read/write device slave address

Name	Size (Bits)	Bit 7	Bit 6	Bit 5	Bit 4	Bit 3	Bit 2	Bit 1	Bit 0
Slave address	8	0	ADR	1	1	1	1	0	R/W

Reading/writing the internal registers must be done according to the following protocol. The read protocol contains two phases:

- Command phase
- Data phase

The command phase is an I2C write to PTN5150H that contains a single data byte indicating the internal register address to read out. The data phase is an I2C read operation that contains one byte of data and STOP bit is asserted, starting from the least significant byte.

All information provided in this document is subject to legal disclaimers.

© NXP Semiconductors N.V. 2016. All rights reserved.

The I2C write operation contains only the command phase, which contains 8-bit internal register address, followed by one byte of data to be written to the register, starting from the least significant byte.

It is recommended to use single-byte write/read commands to PTN5150H. Incremental address read/write function is not supported. Figure 4 and Figure 5 illustrate the protocol used on the I²C-bus to write and read register inside the device.

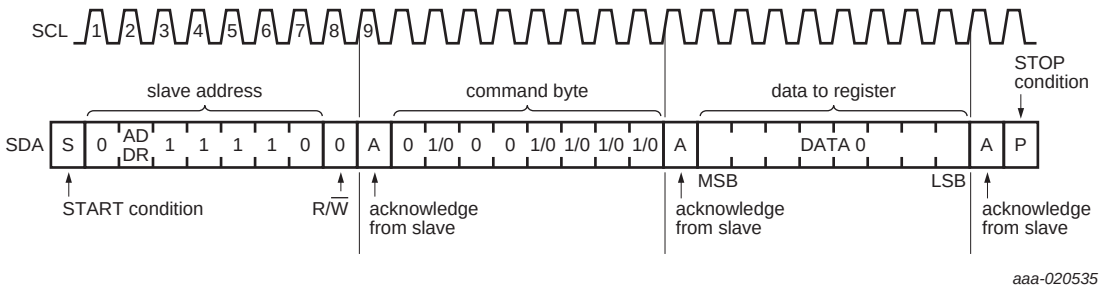

Fig 4. I²C-bus write sequences

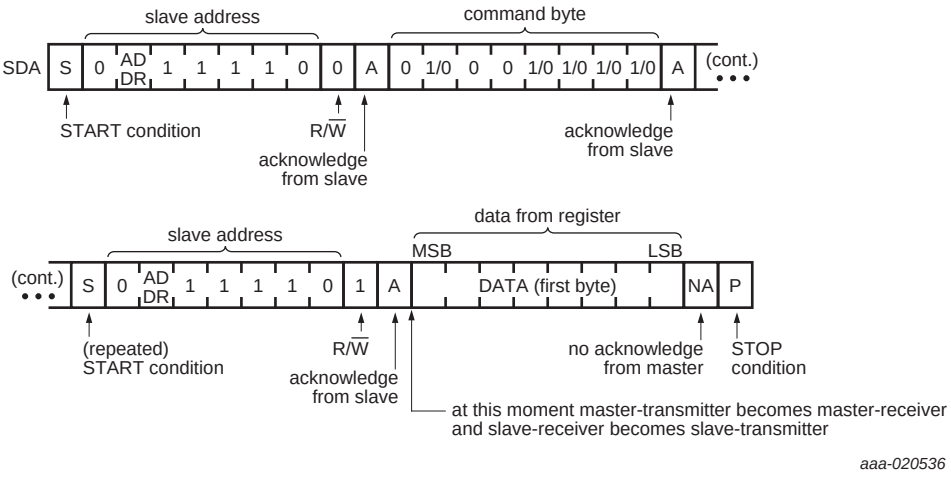

Fig 5. I²C-bus read sequences

All information provided in this document is subject to legal disclaimers.

© NXP Semiconductors N.V. 2016. All rights reserved.

8. Limiting values

Table 9. Limiting values

In accordance with the Absolute Maximum Rating System (IEC 60134).

Symbol	Parameter	Conditions	Min	Max	Unit
VDD[1]	Supply voltage		–0.5	+6.0	V
VBUS_DET	VBUS Detect		–0.5	+28.0	V
Control pins	PORT, ADR/CON_DET, INTB/OUT3, CC1, CC2, EN, ID		–0.5	VDD +0.3	V
	SCL/OUT2, SDA/OUT1		–0.5	VDD +0.3	V
T_{stg}	Storage temperature		-65	150	°C
V_{esd}	Electrostatic discharge CC1/CC2/VBUS_DET	HBM[2]	-	7000	V
	All other pins	HBM[2]	-	2000	V
	All pins	CDM[3]	-	500	V

[1] All voltage values, except differential voltages, are with respect to network ground terminal.

[2] Human Body Model: ANSI/EOS/ESD-S5.1-1994, standard for ESD sensitivity testing, Human Body Model - Component level; Electrostatic Discharge Association, Rome, NY, USA.

[3] Charged Device Model: ANSI/EOS/ESD-S5.3-1-1999, standard for ESD sensitivity testing, Charged Device Model - Component level; Electrostatic Discharge Association, Rome, NY, USA.

9. Recommended operating conditions

Table 10. Operating conditions

Symbol	Parameter	Conditions	Min	Typ	Max	Unit
VDD	supply voltage	–40 to +85 °C	+2.7	-	+5.5	V
$T_{VDDramp}$	VDD ramp up time	Time to reach 90% of VDD	-	-	10	ms
VBUS_DET	VBUS Detect	VBUS Analog Input	4.0	5.0	21	V
V_i	input voltage	CMOS inputs (PORT, ADR)	–0.5	-	VDD+0.3	V
		I2C inputs (SCL, SDA, EN)	–0.5	-	1.98	V
T_{amb}	ambient temperature	operating in free air	–40	-	85	°C

10. Characteristics

Table 11. General characteristics

Symbol	Parameter	Conditions	Min	Typ	Max	Unit
Device role (UFP) Sink CC Detection						
Rd	Pull down resistor	UFP mode	4.59	5.10	5.61	kΩ
V_{CLAMPH}	High current mode clamp voltage	VDD=0 V	0.85	-	2.18	V
V_{CLAMPM}	Medium current mode clamp voltage	VDD=0 V	0.45	-	1.25	V

All information provided in this document is subject to legal disclaimers.

© NXP Semiconductors N.V. 2016. All rights reserved.

Table 11. General characteristics *...continued*

Symbol	Parameter	Conditions	Min	Typ	Max	Unit
V_{CLAMPD}	Default current mode clamp voltage	VDD=0 V	0.25	-	1.25	V
V_{THH}	High current mode threshold	UFP mode	1.16	1.23	1.31	V
V_{THM}	Medium current mode threshold	UFP mode	0.61	0.66	0.70	V
V_{THD}	Default current mode threshold	UFP mode	0.15	0.2	0.25	V
Host role (DFP advertisement) Current source						
I_{PH}	Current source	High current source mode (3 A)	304	330	356	µA
I_{PM}	Current source	Medium current source mode (1.5 A)	166	180	194	µA
I_{PD}	Current source	Default current source mode	64	80	96	µA
VBUS Detect Threshold						
$V_{VBUSDET}$	VBUSDET threshold	with external 1 MΩ ± 1 % resistor	2.4	2.9	4.1	V
Current Consumption						
$I_{DD_hibernation}$	hibernation mode current	VDD = 3.3 V; EN = LOW	2	4.5	10	µA
I_{DD_active}	active supply current; cable attached	VDD = 3.3 V PORT = high (DFP)	65	100	130	µA
		VDD = 3.3 V PORT = low (UFP)	5	15	35	µA
$I_{DD_standby}$	standby/polling current; no cable attached	VDD = 3.3 V PORT = floating (DRP)	5	15	35	µA
		VDD = 3.3 V PORT = high (DFP)	5	15	35	µA
		VDD = 3.3 V PORT = low (UFP)	5	15	35	µA
$T_{CCdebounce}$	debounce time	time a port shall wait before it can determine it is attached	-	120	-	ms
$T_{disconnection}$	disconnection time	time a port shall respond when it is disconnected	-	1.2	-	ms
$T_{Startup}$	start-up time	supply voltage valid to R_p/R_d active	-	25	-	ms
T_{rcfg}		When selected DFP mode, system overwrite to UFP mode using I2C or PORT input, the Trcfg delay is measured from disabled Rp to enable Rd	-	2	-	ms
		When selected UFP mode, system overwrite to DFP mode using I2C or PORT input, the Trcfg delay is measured from to disable Rd and enable Rp	-	35	-	ms

All information provided in this document is subject to legal disclaimers.

© NXP Semiconductors N.V. 2016. All rights reserved.

Table 12. PORT control input characteristics

Symbol	Parameter	Conditions	Min	Typ	Max	Unit
R_{pu}	external pull up resistor	External pull-up resistor is connected to VDD	-	10	-	kΩ
R_{pd}	external pull down resistor	External pull-down resistor is connected to GND	-	10	-	kΩ
V_{IL}	Input Low Voltage		-	-	0.4	V
V_{IM}	Input Mid level Voltage		40%*VDD	50%*VDD	60%*VDD	V
V_{IH}	Input High Voltage		80%*VDD	-	-	V

Table 13. ADR/CON_DET input/output characteristics

Symbol	Parameter	Conditions	Min	Typ	Max	Unit
R_{pu}	external pull up resistor	External pull-up resistor is connected to VDD	-	10	-	kΩ
R_{pd}	external pull down resistor	External pull-down resistor is connected to GND	-	10	-	kΩ
V_{IL}	Input Low Voltage		-		0.4	V
V_{IM}	Input Mid level Voltage		40%*VDD	50%*VDD	60%*VDD	V
V_{IH}	Input High Voltage		80%*VDD	-	-	V
V_{OH}	Output High Voltage	I_{OH} = 3 mA	80%*VDD	-	-	V
V_{OL}	Output Low Voltage	I_{OL} = 3 mA	-	-	20%*VDD	V

[1] CON_DET output can be enabled or disabled by accessing I2C register offset 09H bit[0]

Table 14. EN, SCL and SDA input characteristics

Symbol	Parameter	Conditions	Min	Typ	Max	Unit
$V_{IL(MAX)}$	maximum input voltage low level		-	-	+0.4	V
$V_{IH(MIN)}$	minimum input voltage high level		1.05	-	-	V
I2C Fast mode interface pins (SCL, SDA)						
V_{HYS}	Hysteresis of Schmitt trigger inputs		0.09	-	-	V

Table 15. Open-drain output buffer characteristics (OUT2, OUT1, INTB/OUT3, ID pins)

Symbol	Parameter	Conditions	Min	Typ	Max	Unit
VOL	low-level output voltage	IOL=3mA	0	-	0.4V	V

All information provided in this document is subject to legal disclaimers.

© NXP Semiconductors N.V. 2016. All rights reserved.

11. Package outline

X2QFN12: plastic, super thin quad flat package; no leads; 12 terminals; body 1.6 x 1.6 x 0.35 mm **SOT1355-1**

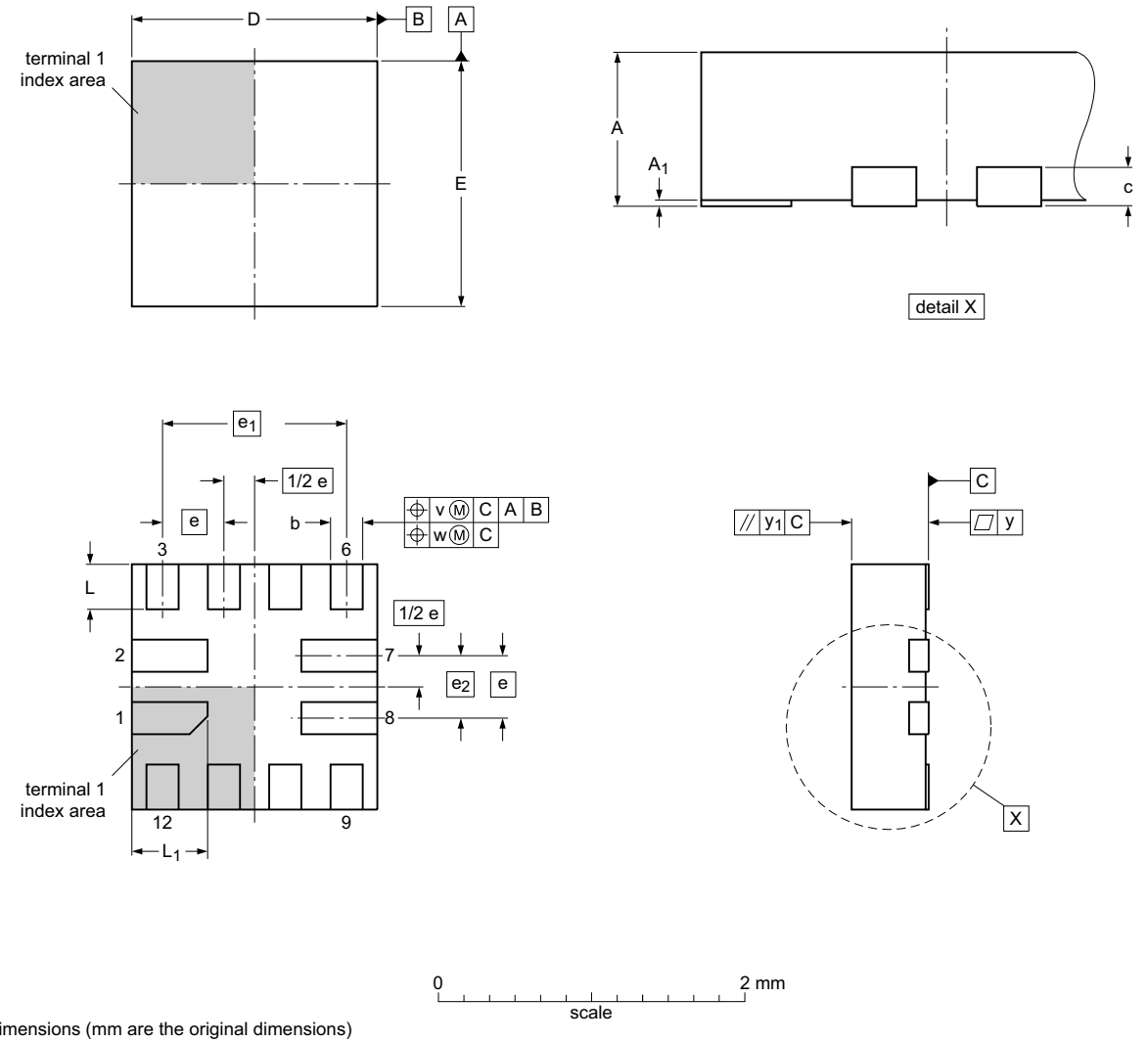

Dimensions (mm are the original dimensions)

Unit		A	A_1	b	c	D	E	e	e_1	e_2	L	L_1	v	w	y	y_1
	max	0.40	0.05	0.25		1.65	1.65				0.4	0.6				
mm	nom	0.35		0.20	0.127	1.60	1.60	0.4	1.2	0.4	0.3	0.5	0.07	0.05	0.05	0.05
	min	0.30	0.00	0.15		1.55	1.55				0.2	0.4				

Note
1. Plastic or metal protrusions of 0.075 mm maximum per side are not included.

sot1355-1_po

Outline version	References				European projection	Issue date
	IEC	JEDEC	JEITA			
SOT1355-1	- - -	MO-255	- - -			~~13-12-23~~ 14-01-13

Fig 6. Package outline X2QFN12 (SOT1355-1)

All information provided in this document is subject to legal disclaimers.

© NXP Semiconductors N.V. 2016. All rights reserved.

12. Packing information

12.1 X2QFN12; Reel dry pack, SMD, 13"; Q2/T3 standard product orientation; Orderable part number ending ,528 or MP; Ordering code (12NC) ending 528

12.1.1 Packing method

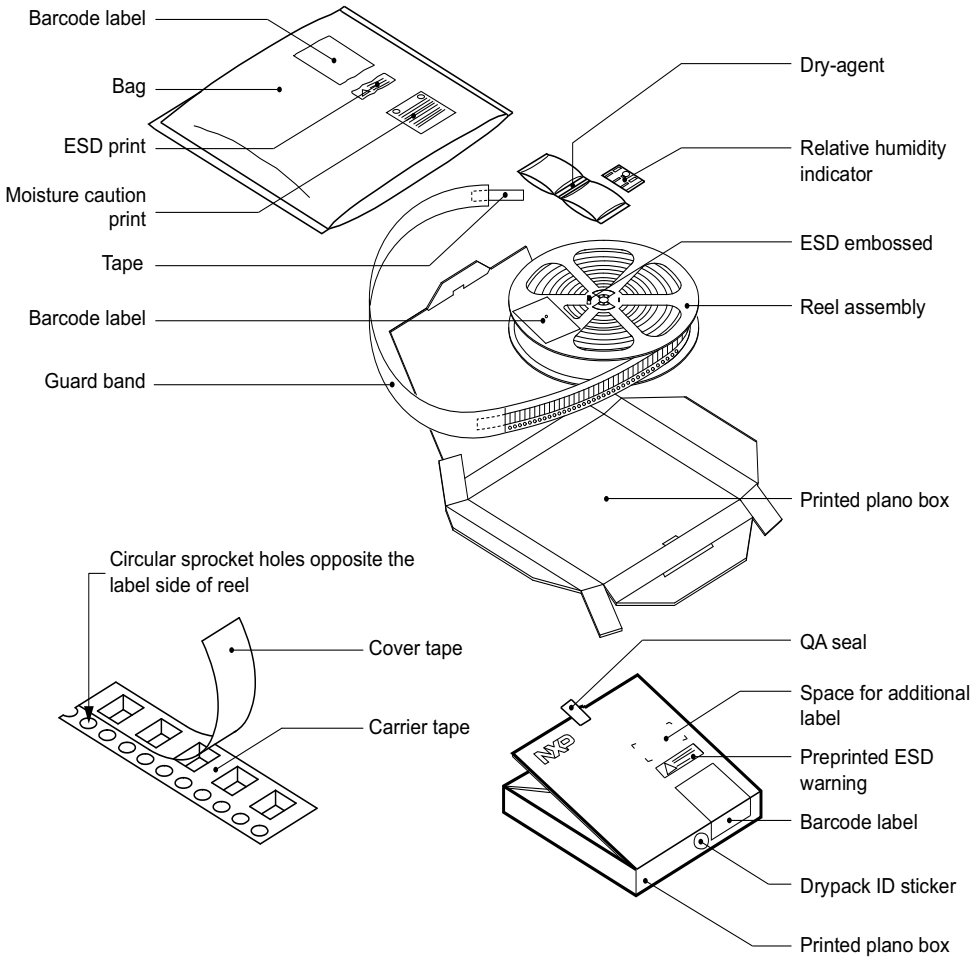

Fig 7. Reel dry pack for SMD

All information provided in this document is subject to legal disclaimers.

© NXP Semiconductors N.V. 2016. All rights reserved.

Table 16. Dimensions and quantities

Reel dimensions d × w (mm) [1]	SPQ/PQ (pcs) [2]	Reels per box	Outer box dimensions l × w × h (mm)
330 × 8	10000	1	342 × 338 × 39

[1] d = reel diameter; w = tape width.

[2] Packing quantity dependent on specific product type.
View ordering and availability details at NXP order portal, or contact your local NXP representative.

12.1.2 Product orientation

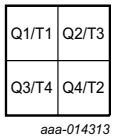

Tape pocket quadrants

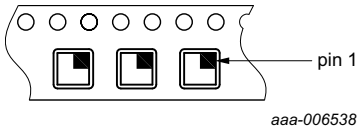

Pin 1 is in quadrant Q2/T3

Fig 8. Product orientation in carrier tape

12.1.3 Carrier tape dimensions

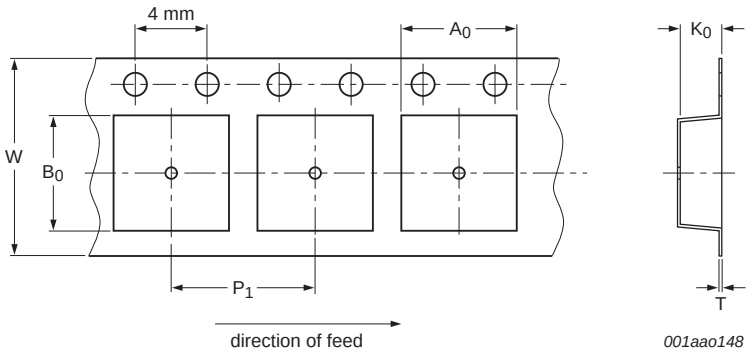

Not drawn to scale.

Fig 9. Carrier tape dimensions

Table 17. Carrier tape dimensions
In accordance with IEC 60286-3.

A_0 (mm)	B_0 (mm)	K_0 (mm)	T (mm)	P_1 (mm)	W (mm)
1.85 ± 0.10	1.85 ± 0.10	0.50 ± 0.05	0.25 ± 0.05	4.0 ± 0.10	8 ± 0.30

All information provided in this document is subject to legal disclaimers.

© NXP Semiconductors N.V. 2016. All rights reserved.

12.1.4 Reel dimensions

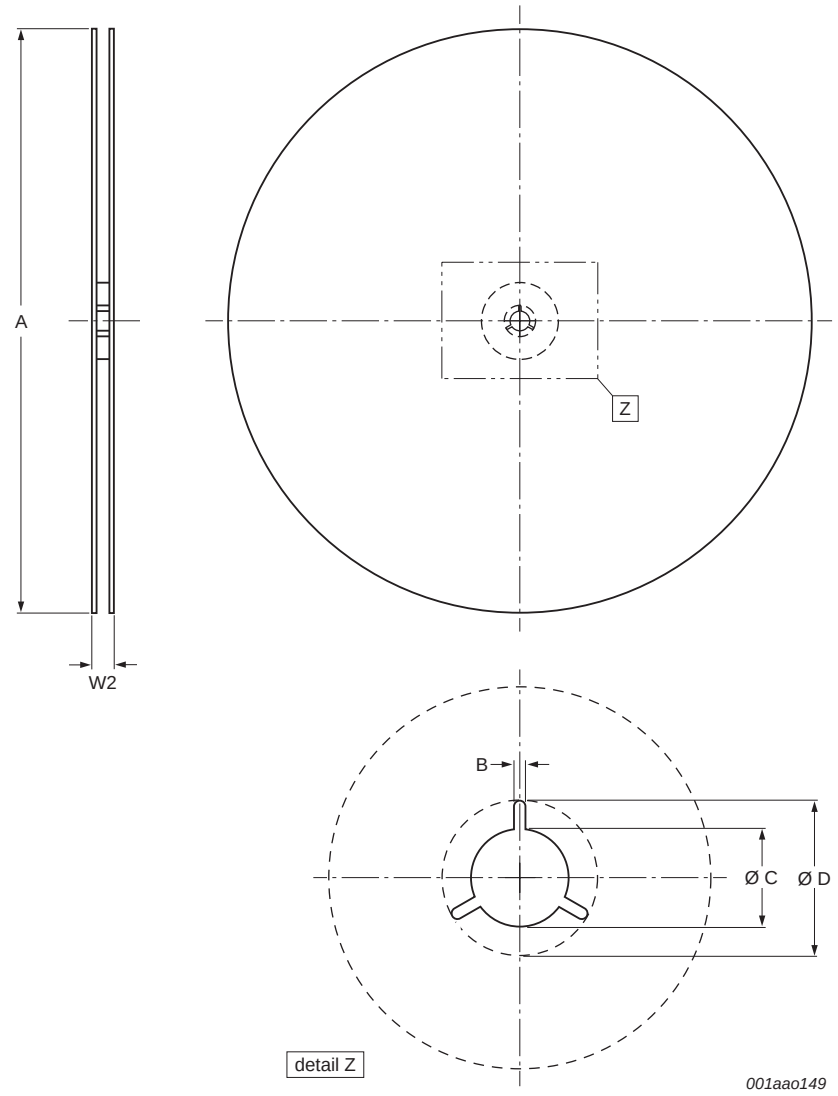

Fig 10. Schematic view of reel

Table 18. Reel dimensions

In accordance with IEC 60286-3.

A [nom] (mm)	W2 [max] (mm)	B [min] (mm)	C [min] (mm)	D [min] (mm)
330	14.4	1.5	12.8	20.2

All information provided in this document is subject to legal disclaimers.

© NXP Semiconductors N.V. 2016. All rights reserved.

12.1.5 Barcode label

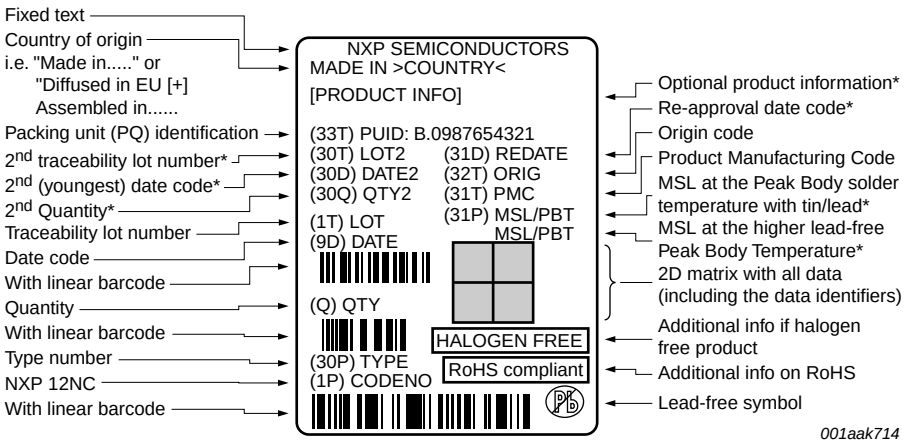

Fig 11. Example of typical box and reel information barcode label

Table 19. Barcode label dimensions

Box barcode label l × w (mm)	Reel barcode label l × w (mm)
100 × 75	100 × 75

13. Soldering of SMD packages

This text provides a very brief insight into a complex technology. A more in-depth account of soldering ICs can be found in Application Note *AN10365 "Surface mount reflow soldering description"*.

13.1 Introduction to soldering

Soldering is one of the most common methods through which packages are attached to Printed Circuit Boards (PCBs), to form electrical circuits. The soldered joint provides both the mechanical and the electrical connection. There is no single soldering method that is ideal for all IC packages. Wave soldering is often preferred when through-hole and Surface Mount Devices (SMDs) are mixed on one printed wiring board; however, it is not suitable for fine pitch SMDs. Reflow soldering is ideal for the small pitches and high densities that come with increased miniaturization.

13.2 Wave and reflow soldering

Wave soldering is a joining technology in which the joints are made by solder coming from a standing wave of liquid solder. The wave soldering process is suitable for the following:

- Through-hole components
- Leaded or leadless SMDs, which are glued to the surface of the printed circuit board

All information provided in this document is subject to legal disclaimers.

© NXP Semiconductors N.V. 2016. All rights reserved.

Not all SMDs can be wave soldered. Packages with solder balls, and some leadless packages which have solder lands underneath the body, cannot be wave soldered. Also, leaded SMDs with leads having a pitch smaller than ~0.6 mm cannot be wave soldered, due to an increased probability of bridging.

The reflow soldering process involves applying solder paste to a board, followed by component placement and exposure to a temperature profile. Leaded packages, packages with solder balls, and leadless packages are all reflow solderable.

Key characteristics in both wave and reflow soldering are:

- Board specifications, including the board finish, solder masks and vias
- Package footprints, including solder thieves and orientation
- The moisture sensitivity level of the packages
- Package placement
- Inspection and repair
- Lead-free soldering versus SnPb soldering

13.3 Wave soldering

Key characteristics in wave soldering are:

- Process issues, such as application of adhesive and flux, clinching of leads, board transport, the solder wave parameters, and the time during which components are exposed to the wave
- Solder bath specifications, including temperature and impurities

13.4 Reflow soldering

Key characteristics in reflow soldering are:

- Lead-free versus SnPb soldering; note that a lead-free reflow process usually leads to higher minimum peak temperatures (see Figure 12) than a SnPb process, thus reducing the process window
- Solder paste printing issues including smearing, release, and adjusting the process window for a mix of large and small components on one board
- Reflow temperature profile; this profile includes preheat, reflow (in which the board is heated to the peak temperature) and cooling down. It is imperative that the peak temperature is high enough for the solder to make reliable solder joints (a solder paste characteristic). In addition, the peak temperature must be low enough that the packages and/or boards are not damaged. The peak temperature of the package depends on package thickness and volume and is classified in accordance with Table 20 and 21

Table 20. SnPb eutectic process (from J-STD-020D)

Package thickness (mm)	Package reflow temperature (°C)	
	Volume (mm^3)	
	< 350	≥ 350
< 2.5	235	220
≥ 2.5	220	220

All information provided in this document is subject to legal disclaimers.

© NXP Semiconductors N.V. 2016. All rights reserved.

Table 21. Lead-free process (from J-STD-020D)

Package thickness (mm)	Package reflow temperature (°C)		
	Volume (mm^3)		
	< 350	350 to 2000	> 2000
< 1.6	260	260	260
1.6 to 2.5	260	250	245
> 2.5	250	245	245

Moisture sensitivity precautions, as indicated on the packing, must be respected at all times.

Studies have shown that small packages reach higher temperatures during reflow soldering, see Figure 12.

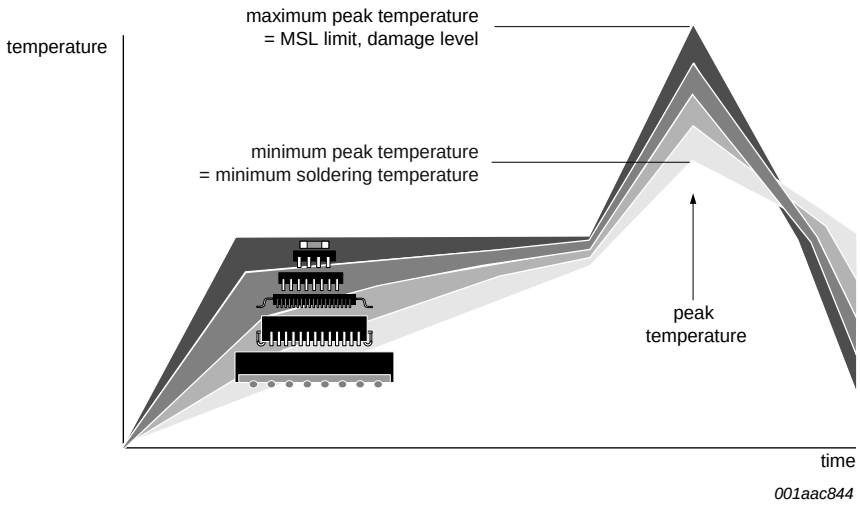

MSL: Moisture Sensitivity Level

Fig 12. Temperature profiles for large and small components

For further information on temperature profiles, refer to Application Note *AN10365 "Surface mount reflow soldering description"*.

All information provided in this document is subject to legal disclaimers.

© NXP Semiconductors N.V. 2016. All rights reserved.

14. Soldering: PCB footprints

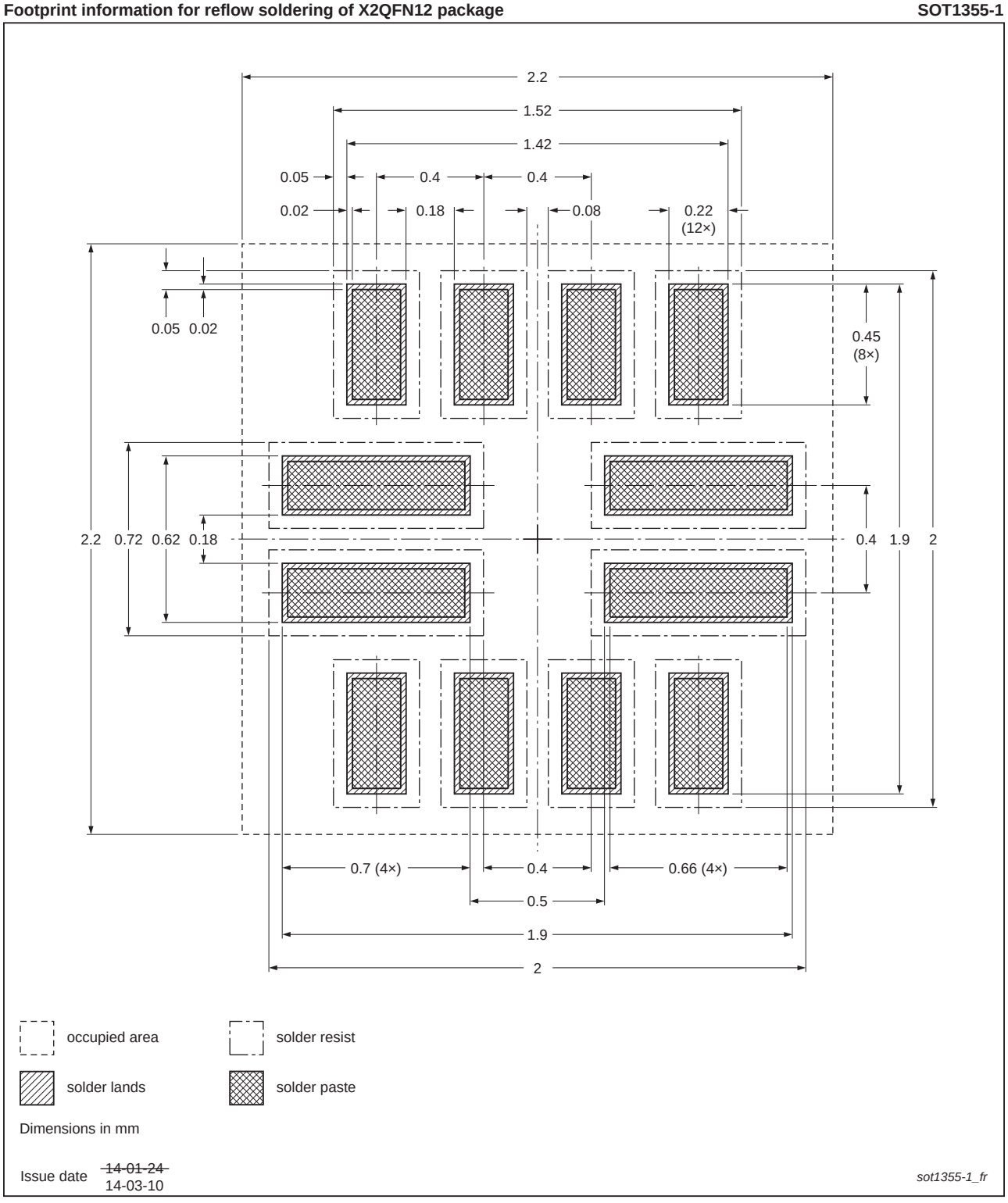

Fig 13. PCB footprint for SOT1355-1 (X2QFN12); reflow soldering

All information provided in this document is subject to legal disclaimers.

© NXP Semiconductors N.V. 2016. All rights reserved.

15. Revision history

Table 22. Revision history

Document ID	Release date	Data sheet status	Change notice	Supersedes
PTN5150H v.1.1	20161209	Product data sheet	-	PTN5150H v.1
Modifications:	• Table 2 “Ordering options”: Removed 500 piece MOQ • Added Section 12 “Packing information”, Section 13 “Soldering of SMD packages”, Section 14 “Soldering: PCB footprints”			
PTN5150H v.1	20160413	Product data sheet	-	-

All information provided in this document is subject to legal disclaimers.

© NXP Semiconductors N.V. 2016. All rights reserved.

16. Legal information

16.1 Data sheet status

Document status[1][2]	Product status[3]	Definition
Objective [short] data sheet	Development	This document contains data from the objective specification for product development.
Preliminary [short] data sheet	Qualification	This document contains data from the preliminary specification.
Product [short] data sheet	Production	This document contains the product specification.

[1] Please consult the most recently issued document before initiating or completing a design.

[2] The term 'short data sheet' is explained in section "Definitions".

[3] The product status of device(s) described in this document may have changed since this document was published and may differ in case of multiple devices. The latest product status information is available on the Internet at URL http://www.nxp.com.

16.2 Definitions

Draft — The document is a draft version only. The content is still under internal review and subject to formal approval, which may result in modifications or additions. NXP Semiconductors does not give any representations or warranties as to the accuracy or completeness of information included herein and shall have no liability for the consequences of use of such information.

Short data sheet — A short data sheet is an extract from a full data sheet with the same product type number(s) and title. A short data sheet is intended for quick reference only and should not be relied upon to contain detailed and full information. For detailed and full information see the relevant full data sheet, which is available on request via the local NXP Semiconductors sales office. In case of any inconsistency or conflict with the short data sheet, the full data sheet shall prevail.

Product specification — The information and data provided in a Product data sheet shall define the specification of the product as agreed between NXP Semiconductors and its customer, unless NXP Semiconductors and customer have explicitly agreed otherwise in writing. In no event however, shall an agreement be valid in which the NXP Semiconductors product is deemed to offer functions and qualities beyond those described in the Product data sheet.

16.3 Disclaimers

Limited warranty and liability — Information in this document is believed to be accurate and reliable. However, NXP Semiconductors does not give any representations or warranties, expressed or implied, as to the accuracy or completeness of such information and shall have no liability for the consequences of use of such information. NXP Semiconductors takes no responsibility for the content in this document if provided by an information source outside of NXP Semiconductors.

In no event shall NXP Semiconductors be liable for any indirect, incidental, punitive, special or consequential damages (including - without limitation - lost profits, lost savings, business interruption, costs related to the removal or replacement of any products or rework charges) whether or not such damages are based on tort (including negligence), warranty, breach of contract or any other legal theory.

Notwithstanding any damages that customer might incur for any reason whatsoever, NXP Semiconductors' aggregate and cumulative liability towards customer for the products described herein shall be limited in accordance with the *Terms and conditions of commercial sale* of NXP Semiconductors.

Right to make changes — NXP Semiconductors reserves the right to make changes to information published in this document, including without limitation specifications and product descriptions, at any time and without notice. This document supersedes and replaces all information supplied prior to the publication hereof.

Suitability for use — NXP Semiconductors products are not designed, authorized or warranted to be suitable for use in life support, life-critical or safety-critical systems or equipment, nor in applications where failure or malfunction of an NXP Semiconductors product can reasonably be expected to result in personal injury, death or severe property or environmental damage. NXP Semiconductors and its suppliers accept no liability for inclusion and/or use of NXP Semiconductors products in such equipment or applications and therefore such inclusion and/or use is at the customer's own risk.

Applications — Applications that are described herein for any of these products are for illustrative purposes only. NXP Semiconductors makes no representation or warranty that such applications will be suitable for the specified use without further testing or modification.

Customers are responsible for the design and operation of their applications and products using NXP Semiconductors products, and NXP Semiconductors accepts no liability for any assistance with applications or customer product design. It is customer's sole responsibility to determine whether the NXP Semiconductors product is suitable and fit for the customer's applications and products planned, as well as for the planned application and use of customer's third party customer(s). Customers should provide appropriate design and operating safeguards to minimize the risks associated with their applications and products.

NXP Semiconductors does not accept any liability related to any default, damage, costs or problem which is based on any weakness or default in the customer's applications or products, or the application or use by customer's third party customer(s). Customer is responsible for doing all necessary testing for the customer's applications and products using NXP Semiconductors products in order to avoid a default of the applications and the products or of the application or use by customer's third party customer(s). NXP does not accept any liability in this respect.

Limiting values — Stress above one or more limiting values (as defined in the Absolute Maximum Ratings System of IEC 60134) will cause permanent damage to the device. Limiting values are stress ratings only and (proper) operation of the device at these or any other conditions above those given in the Recommended operating conditions section (if present) or the Characteristics sections of this document is not warranted. Constant or repeated exposure to limiting values will permanently and irreversibly affect the quality and reliability of the device.

Terms and conditions of commercial sale — NXP Semiconductors products are sold subject to the general terms and conditions of commercial sale, as published at http://www.nxp.com/profile/terms, unless otherwise agreed in a valid written individual agreement. In case an individual agreement is concluded only the terms and conditions of the respective agreement shall apply. NXP Semiconductors hereby expressly objects to applying the customer's general terms and conditions with regard to the purchase of NXP Semiconductors products by customer.

No offer to sell or license — Nothing in this document may be interpreted or construed as an offer to sell products that is open for acceptance or the grant, conveyance or implication of any license under any copyrights, patents or other industrial or intellectual property rights.

All information provided in this document is subject to legal disclaimers.

© NXP Semiconductors N.V. 2016. All rights reserved.

Export control — This document as well as the item(s) described herein may be subject to export control regulations. Export might require a prior authorization from competent authorities.

Quick reference data — The Quick reference data is an extract of the product data given in the Limiting values and Characteristics sections of this document, and as such is not complete, exhaustive or legally binding.

Non-automotive qualified products — Unless this data sheet expressly states that this specific NXP Semiconductors product is automotive qualified, the product is not suitable for automotive use. It is neither qualified nor tested in accordance with automotive testing or application requirements. NXP Semiconductors accepts no liability for inclusion and/or use of non-automotive qualified products in automotive equipment or applications.

In the event that customer uses the product for design-in and use in automotive applications to automotive specifications and standards, customer (a) shall use the product without NXP Semiconductors' warranty of the product for such automotive applications, use and specifications, and (b) whenever customer uses the product for automotive applications beyond NXP Semiconductors' specifications such use shall be solely at customer's own risk, and (c) customer fully indemnifies NXP Semiconductors for any liability, damages or failed product claims resulting from customer design and use of the product for automotive applications beyond NXP Semiconductors' standard warranty and NXP Semiconductors' product specifications.

Translations — A non-English (translated) version of a document is for reference only. The English version shall prevail in case of any discrepancy between the translated and English versions.

16.4 Trademarks

Notice: All referenced brands, product names, service names and trademarks are the property of their respective owners.

17. Contact information

For more information, please visit: **http://www.nxp.com**

For sales office addresses, please send an email to: **salesaddresses@nxp.com**

All information provided in this document is subject to legal disclaimers.

© NXP Semiconductors N.V. 2016. All rights reserved.

18. Contents

1 General description 1
2 Features and benefits 1
3 Applications 2
4 Ordering information 2
4.1 Ordering options 2
5 Functional diagram 3
6 Pinning information 3
6.1 Pinning 3
6.2 Pin description 4
7 Functional description 5
7.1 CC detection and indication block 5
7.2 ADR/CON_DET output pin 6
7.3 VCONN1/VCONN2 power output control 6
7.4 Off state 7
7.5 I²C-bus 7
7.6 I²C-bus programmability 8
7.7 I²C-bus read and write operations 11
8 Limiting values 13
9 Recommended operating conditions 13
10 Characteristics 13
11 Package outline 16
12 Packing information 17
12.1 X2QFN12; Reel dry pack, SMD, 13"; Q2/T3 standard product orientation; Orderable part number ending ,528 or MP; Ordering code (12NC) ending 528 17
12.1.1 Packing method 17
12.1.2 Product orientation 18
12.1.3 Carrier tape dimensions 18
12.1.4 Reel dimensions 19
12.1.5 Barcode label 20
13 Soldering of SMD packages 20
13.1 Introduction to soldering 20
13.2 Wave and reflow soldering 20
13.3 Wave soldering 21
13.4 Reflow soldering 21
14 Soldering: PCB footprints 23
15 Revision history 24
16 Legal information 25
16.1 Data sheet status 25
16.2 Definitions 25
16.3 Disclaimers 25
16.4 Trademarks 26
17 Contact information 26
18 Contents 27

Please be aware that important notices concerning this document and the product(s) described herein, have been included in section 'Legal information'.

© NXP Semiconductors N.V. 2016. All rights reserved.

For more information, please visit: http://www.nxp.com
For sales office addresses, please send an email to: salesaddresses@nxp.com

Date of release: 9 December 2016
Document identifier: PTN5150H