6-A, 3.3-V Input Non-Isolated Wide-Output Adjust Power Module

SLTS200C – MAY 2003 – REVISED DECEMBER 2003



NOMINAL SIZE = 0.75 in x 0.5 in (19,05 mm x 12,7 mm)

Features

- Up to 6-A Output Current
- 3.3 V Input Voltage
- Wide-Output Voltage Adjust (0.9 V to 2.5 V)
- Efficiencies up to 95 %
- 115 W/in³ Power Density
- On/Off Inhibit
- Under-Voltage Lockout
- Output Current Limit
- Over-Temperature Protection
- Operating Temp: –40 to +85 °C
- Surface Mount Package
- Safety Agency Approvals (Pending): UL 1950, CSA 22.2 950, EN60950 & VDE

Description

The PTH03000 series of non-isolated power modules are small in size and high on performance. Using double-sided surface mount construction and synchronous rectification technology, these regulators deliver up to 6 A of output current while occupying a PCB area of about half the size of a standard postage stamp. They are an ideal choice for applications where space, performance and cost are important design constraints.

The series operates from an input voltage of 3.3 V to provide step-down power conversion to any output voltage over the range, 0.9 V to 2.5 V. The output voltage of the PTH03000W is set within this range using a single resistor.

Operating features include an on/off inhibit, output voltage adjust (trim), an output current limit, and over-temperature protection.

Target applications include telecom, industrial, and general purpose circuits, including low-power dual-voltage systems that use a DSP, microprocessor, or ASIC.

Package options include both through-hole and surface mount configurations.

Pin Configuration

Pin	Function
1	GND
2	V_{in}
3	Inhibit *
4	V_o Adjust
5	V_{out}

* *Denotes negative logic:*
Open = Output On
Ground = Output Off

Standard Application

R_{set} = Required to set the output voltage to a value higher than 0.9 V (see spec. table for values)
C_{in} = Required 100 µF capacitor
C_{out} = Optional 100 µF capacitor

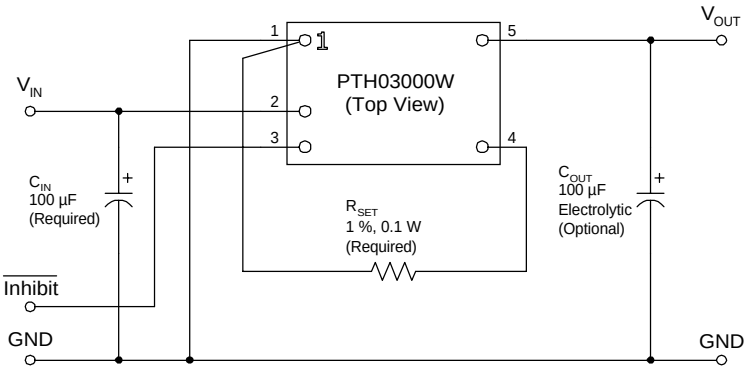

Ordering Information

Output Voltage (PTH03000❒xx)

Code	Voltage
W	0.9 V – 2.5 V (Adjust)

Package Options (PTH03000x❒❒) (1)

Code	Description	Pkg Ref. (2)
AH	Horiz. T/H	(EUS)
AS	SMD, Standard (3)	(EUT)

Notes: *(1) Add "T" to end of part number for tape and reel on SMD packages only.*
(2) Reference the applicable package reference drawing for the dimensions and PC board layout
(3) "Standard" option specifies 63/37, Sn/Pb pin solder material.

Pin Descriptions

Vin: The positive input voltage power node to the module, which is referenced to common GND.

Vout: The regulated positive power output with respect to the GND node.

GND: This is the common ground connection for the 'V_{in}' and 'V_{out}' power connections. It is also the 0 VDC reference for the 'Inhibit' and 'V_o Adjust' control inputs.

Inhibit: The Inhibit pin is an open-collector/drain negative logic input that is referenced to GND. Applying a low-level ground signal to this input disables the module's output and turns off the output voltage. When the Inhibit control is active, the input current drawn by the regulator is significantly reduced. If the Inhibit pin is left open-circuit, the module will produce an output whenever a valid input source is applied.

Vo Adjust: A 0.1 W 1 % resistor must be directly connected between this pin and the *GND* pin to set the output voltage to a value higher than 0.9 V. The temperature stability of the resistor should be 100 ppm/°C (or better). The set point range for the output voltage is from 0.9 V to 2.5 V. The resistor required for a given output voltage may be calculated from the following formula. If left open circuit, the output voltage will default to its lowest value. For further information on output voltage adjustment, consult the related application note.

$$R_{set} = 10\ k\Omega \cdot \frac{0.891\ V}{V_{out} - 0.9\ V} - 4.99\ k\Omega$$

The specification table gives the preferred resistor values for a number of standard output voltages.

Environmental & Absolute Maximum Ratings

Characteristics	Symbols	Conditions	Min	Typ	Max	Units
Operating Temperature Range	T_a	Over V_{in} Range	–40 (i)	—	+85	°C
Solder Reflow Temperature	T_{reflow}	Surface temperature of module body or pins			235 (ii)	°C
Storage Temperature	T_s	—	–40	—	+125	°C
Over Temperature Protection	OTP	IC junction temperature	—	150	—	°C
Mechanical Shock		Per Mil-STD-883D, Method 2002.3 1 msec, ½ sine, mounted	—	500	—	G's
Mechanical Vibration		Mil-STD-883D, Method 2007.2 20-2000 Hz	—	20	—	G's
Weight	—		—	2	—	grams
Flammability	—	Meets UL 94V-O				

Notes: *(i) During reflow of SMD package version do not elevate peak temperature of the module, pins or internal components above the stated maximum.*

Electrical Specifications

Unless otherwise stated, T_a =25 °C, V_{in} =3.3 V, V_o =2 V, C_{in} =100 µF, C_{out} =0 µF, and I_o =$I_o$max

Characteristics	Symbols	Conditions	PTH03000W Min	PTH03000W Typ	PTH03000W Max	Units
Output Current	I_o	0.9 V ≤ V_o ≤ 2.5 V, T_a =60 °C, 200 LFM airflow T_a =25 °C, natural convection	0 0	— —	6 (1) 6 (1)	A
Input Voltage Range	V_{in}	Over I_o range	3	—	3.6	V
Set-Point Voltage Tolerance	V_o tol		—	—	±2 (2)	%V_o
Temperature Variation	ΔReg_{temp}	–40 °C <T_a < +85 °C	—	±0.5	—	%V_o
Line Regulation	ΔReg_{line}	Over V_{in} range	—	±5	—	mV
Load Regulation	ΔReg_{load}	Over I_o range	—	±5	—	mV
Total Output Variation	ΔReg_{tot}	Includes set-point, line, load, –40 °C ≤ T_a ≤ +85 °C	—	—	±3 (2)	%V_o
Efficiency	η	I_o =4 A, R_{SET} = 576 Ω, V_o = 2.5 V R_{SET} = 3.09 kΩ, V_o = 2.0 V R_{SET} = 4.87 kΩ, V_o = 1.8 V R_{SET} = 9.76 kΩ, V_o = 1.5 V R_{SET} = 24.3 kΩ, V_o = 1.2 V R_{SET} = 82.5 kΩ, V_o = 1.0 V	— — — — — —	93 91 90 88 86 84	— — — — — —	%
V_o Ripple (pk-pk)	V_r	20 MHz bandwidth	—	20	—	mVpp
Transient Response		1 A/µs load step, 50 to 100 % $I_o$max, V_o =1.8 V, C_{out} =100 µF				
	t_{tr}	Recovery time	—	70	—	µSec
	ΔV_{tr}	V_o over/undershoot	—	100	—	mV
Current Limit	I_{lim}	ΔV_o = –50 mV	—	13	—	A
Under-Voltage Lockout	UVLO	V_{in} increasing V_{in} decreasing	— 2.6	2.95 2.8	3 —	V
Inhibit Control (pin 3)		Referenced to GND				
Input High Voltage	V_{IH}		V_{in}–0.5	—	Open (3)	V
Input Low Voltage	V_{IL}		–0.2	—	0.8	
Input Low Current	I_{IL}	Pin 3 to GND	—	–10	—	µA
Standby Input Current	I_{in} inh	pins 1 & 3 connected	—	1	—	mA
Switching Frequency	f_s	Over V_{in} and I_o ranges	—	700	—	kHz
External Input Capacitance	C_{in}		100 (4)	—	—	µF
External Output Capacitance	C_{out}	Capacitance value non-ceramic	0	100 (5)	1,000 (6)	µF
		ceramic	0	—	300	
		Equiv. series resistance (non-ceramic)	4 (7)	—	—	mΩ
Reliability	MTBF	Per Bellcore TR-332 50 % stress, T_a =40 °C, ground benign	28	—	—	10^6 Hrs

Notes: *(1) See SOA curves or consult factory for appropriate derating.*
(2) The set-point voltage tolerance is affected by the tolerance and stability ofR_{SET}. The stated limit is unconditionally met if R_{SET} has a tolerance of 1 % with 100 ppm/°C or better temperature stability.
(3) The Inhibit control (pin 3) has an internal pull-up to Vin, and if left open-circuit the module will operate when input power is applied. A small low-leakage (<100 nA) MOSFET is recommended to control this input. See application notes for more information.
(4) The regulator requires a minimum of 100 µF input capacitor with a minimum 300 mArms ripple current rating. For further information, consult the related application note on Capacitor Recommendations.
(5) An external output capacitor is not required for basic operation. Adding 100 µF of distributed capacitance at the load will improve the transient response.
(6) This is the calculated maximum. The minimum ESR limitation will often result in a lower value. Consult the application notes for further guidance.
(7) This is the typical ESR for all the electrolytic (non-ceramic) output capacitance. Use 7 mΩ as the minimum when using max-ESR values to calculate.

Characteristic Data; V_{in} =3.3V *(See Note A)*

Efficiency vs Output Current

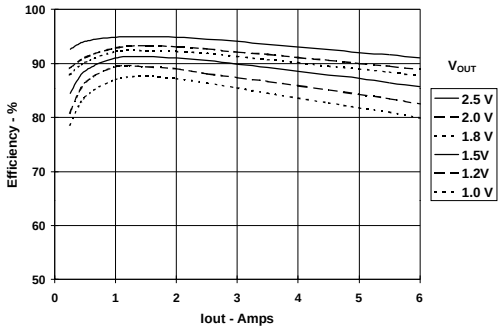

Ripple vs Output Current

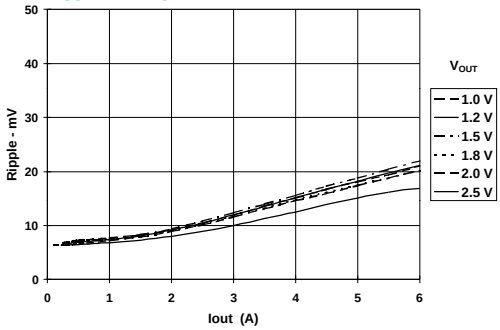

Power Dissipation vs Output Current

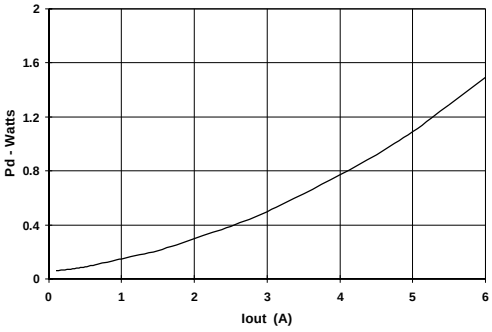

Safe Operating Area; V_{in} =3.3 V *(See Note B)*

All Output Voltages

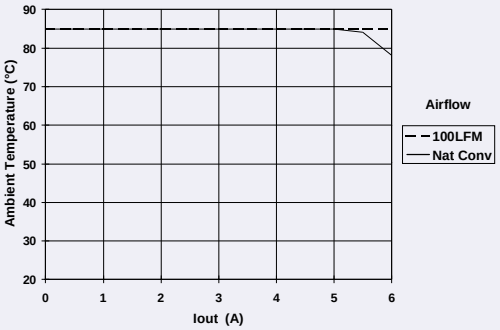

Note A: *Characteristic data has been developed from actual products tested at 25°C. This data is considered typical data for the Converter.*
Note B: *SOA curves represent the conditions at which internal components are at or below the manufacturer's maximum operating temperatures. Derating limits apply to modules soldered directly to a 4 in. × 4 in. double-sided PCB with 1 oz. copper.*

Capacitor Recommendations for the PTH03000W, Wide-Output Adjust Power Modules

Input Capacitor

The recommended input capacitor(s) is determined by the 100 µF minimum capacitance and 300 mArms minimum ripple current rating.

Ripple current, less than 300 mΩ equivalent series resistance (ESR), and temperature are the major considerations when selecting input capacitors. Unlike polymer tantalum, regular tantalum capacitors have a recommended minimum voltage rating of 2 × (maximum DC voltage + AC ripple). This is standard practice to ensure reliability.

For improved ripple reduction on the input bus, ceramic capacitors [2] may used to complement electrolytic types and achieve the minimum required capacitance.

Output Capacitors (Optional)

For applications with load transients (sudden changes in load current), regulator response will benefit from an external output capacitance. The recommended output capacitance of 100 µF will allow the module to meet its transient response specification (see product data sheet). For most applications, a high quality computer-grade aluminum electrolytic capacitor is adequate. These capacitors provide decoupling over the frequency range, 2 kHz to 150 kHz, and are suitable for ambient temperatures above 0 °C. For operation below 0 °C tantalum, ceramic or Os-Con type capacitors are recommended. When using one or more non-ceramic capacitors, the calculated equivalent ESR should be no lower than 4 mΩ (7 mΩ using the manufacturer's maximum ESR for a single capacitor). A list of preferred low-ESR type capacitors are identified in Table 1-1.

Ceramic Capacitors

Above 150 kHz the performance of aluminum electrolytic capacitors becomes less effective. To further improve the reflected input ripple current [2] or the output transient response, multilayer ceramic capacitors can also be added. Ceramic capacitors have very low ESR and their resonant frequency is higher than the bandwidth of the regulator. When used on the output their combined ESR is not critical as long as the total value of ceramic capacitance does not exceed 300 µF. Also, to prevent the formation of local resonances, do not place more than five identical ceramic capacitors in parallel with values of 10 µF or greater.

Tantalum Capacitors

Tantalum type capacitors can be used at both the input and output, and are recommended for applications where the ambient operating temperature can be less than 0 °C. The AVX TPS, Sprague 593D/594/595 and Kemet T495/T510 capacitor series are suggested over many other tantalum types due to their higher rated surge, power dissipation, and ripple current capability. As a caution many general purpose tantalum capacitors have considerably higher ESR, reduced power dissipation and lower ripple current capability. These capacitors are also less reliable as they have lower power dissipation and surge current ratings. Tantalum capacitors that do not have a stated ESR or surge current rating are not recommended for power applications.

When specifying Os-Con and polymer tantalum capacitors for the output, the minimum ESR limit will be encountered well before the maximum capacitance value is reached.

Capacitor Table

Table 1-1 identifies the characteristics of capacitors from a number of vendors with acceptable ESR and ripple current (rms) ratings. The recommended number of capacitors required at both the input and output buses is identified for each capacitor type.

This is not an extensive capacitor list. Capacitors from other vendors are available with comparable specifications. Those listed are for guidance. The RMS ripple current rating and ESR (at 100 kHz) are critical parameters necessary to insure both optimum regulator performance and long capacitor life.

Designing for Very Fast Load Transients

The transient response of the DC/DC converter has been characterized using a load transient with a di/dt of 1 A/µs. The typical voltage deviation for this load transient is given in the data sheet specification table using the optional value of output capacitance. As the di/dt of a transient is increased, the response of a converter's regulation circuit ultimately depends on its output capacitor decoupling network. This is an inherent limitation with any DC/DC converter once the speed of the transient exceeds its bandwidth capability. If the target application specifies a higher di/dt or lower voltage deviation, the requirement can only be met with additional output capacitor decoupling. In these cases special attention must be paid to the type, value and ESR of the capacitors selected.

If the transient performance requirements exceed that specified in the data sheet, the selection of output capacitors becomes more important. For further guidance consult the separate application note, "*Selecting Output Capacitors for PTH Products in High-Performance Applications.*"

Table 1-1: Input/Output Capacitors

Capacitor Vendor, Type/ Series (Style)	Capacitor Characteristics					Quantity		
	Working Voltage	Value (µF)	Max. (ESR) at 100 kHz	Max. Ripple at 85 °C Current (Irms)	Physical Size (mm)	Input Bus	Output Bus	Vendor Number
Panasonic								
FC, Aluminum (SMD)	25 V	100 µF	0.300 Ω	450 mA	8×10	1	1	EEVFC1E101P
WA, Poly-Aluminum (SMD)	10 V	120 µF	0.035 Ω	2800 mA	8.3×6.9	1	≤3	EEFWA1A121P
Panasonic, Aluminum								
FC (Radial)	16 V	220 µF	0.150 Ω	555 mA	10×10.2	1	≤5	EEUFC1C221
FK (SMD)	16 V	330 µF	0.160 Ω	600 mA	8×10.2	1	≤3	EEVFK1C331P
United Chemi–Con								
FS, Os-con (Radial)	10 V	100 µF	0.040 Ω	2100 mA	6.3×9.8	1	≤3	10FS100M
PXA , Poly-Alum (SMD)	10 V	120 µF	0.027 Ω	2430 mA	8×6.7	1	≤3	PXA10VC121MH80TP
MVZ, Aluminum (SMD)	16 V	220 µF	0.170 Ω	450 mA	8×10	1	≤5	MVZ25VC221MH10TP
PS, Poly-Alum. (Radial)	10 V	100 µF	0.024 Ω	4420 mA	8×11.5	1	≤3	10PS270MH11
Nichicon, Aluminum								
WG, Aluminum (SMD)	35 V	100 µF	0.150 Ω	670 mA	10×10	1	1	UWG1V101MNR1GS
PM, (Radial)	25 V	150 µF	0.160 Ω	460 mA	10×11.5	1	≤5	UPM1E151MPH
F55, Tantalum (SMD)	10 V	100 µF	0.055 Ω	2000 mA	7.7×4.3	1	≤3	F551A107MN
Sanyo								
SVP, Os-con (SMD)	10 V	120 µF	0.040 Ω	>2500 mA	7×8	1	≤3	10SVP120M
SP, Os-con (Radial)	16 V	100 µF	0.025 Ω	>2800 mA	6.3×9.8	1	≤2	16SPS100M
TPE, Poscap Polymer (SMD)	10 V	220 µF	0.025 Ω	>2400mA	7.3×5.7	1	≤2	10TPE220ML
AVX, Tantalum								
TPS (SMD)	10 V	100 µF	0.100 Ω	>1090 mA	7.3L	1	≤3	TPSD107M010R0100
	10 V	220 µF	0.100 Ω	>1414 mA	×4.3W ×4.1H	1	≤3	TPSV227M010R0100
Kemet								
T520, Poly-Alum (SMD)	10 V	100 µF	0.080 Ω	1200 mA	7.3L ×5.7W	1	≤4	T520D107M010AS
T495,Tantalum (SMD)	10 V	100 µF	0.100 Ω	>1100 mA	×4.0H	1	≤4	T495X107M010AS
A700-Poly-Alum. (SMD)	6.3 V	100 µF	0.018 Ω	2900 mA		1	≤2	A700D107M006AT
Vishay-Sprague								
594D, Tantalum (SMD)	10 V	150 µF	0.090 Ω	1100 mA	7.3L	1	≤4	594D157X0010C2T
595D, Tantalum (SMD)	10 V	120 µF	0.140 Ω	>1000 mA	×6.0W ×4.1H	1	≤4	595D127X0010D2T
94SA, Os-con (Radial)	10 V	100 µF	0.030 Ω	2670 mA	8×10.5	1	≤2	94SA107X0010EBP
Kemet, Ceramic X5R (SMD)	16 V	10	0.002 Ω	—	1210 case	1	≤5	C1210C106M4PAC
	6.3 V	47	0.002 Ω		3225 mm	2 [1]	≤2	C1210C476K9PAC
Murata, Ceramic X5R (SMD)	6.3 V	100	0.002 Ω	—	1210 case	1	≤1	GRM32ER60J107M
	6.3 V	47			3225 mm	2 [1]	≤2	GRM32ER60J476M
	16 V	22				5	≤3	GRM32ER61C226K
	16 V	10				1 [2]	≤5	GRM32DR61C106K
TDK, Ceramic X5R (SMD)	6.3 V	100	0.002 Ω	—	1210 case	1	≤1	C3225X5R0J107MT
	6.3 V	47			3225 mm	2 [1]	≤2	C3225X5R0J476MT
	16 V	22				5	≤3	C3225X5R1C226MT
	16 V	10				1 [2]	≤5	C3225X5R1C106MT

[1] A total capacitance of 94 µF is acceptable based on the combined ripple current rating.
[2] A ceramic capacitor may be used to complement electrolytic types at the input to further reduce high-frequency ripple current.

Adjusting the Output Voltage of the PTH03000W Wide-Output Adjust Power Modules

The *V_o Adjust* control (pin 4) sets the output voltage of the PTH03000Wproduct. The adjustment range is from 0.9 V to 2.5 V. The adjustment method requires the addition of a single external resistor, R_{set}, that must be connected directly between the *V_o Adjust* and *GND* pins [1]. Table 2-1 gives the preferred value of the external resistor for a number of standard voltages, along with the actual output voltage that this resistance value provides.

For other output voltages the value of the required resistor can either be calculated using the following formula, or simply selected from the range of values given in Table 2-2. Figure 2-1 shows the placement of the required resistor.

$$R_{set} = 10\,k\Omega \cdot \frac{0.891\ V}{V_{out} - 0.9\ V} - 4.99\,k\Omega$$

Table 2-1; Preferred Values of R_{set} for Standard Output Voltages

V_{out} (Standard)	R_{set} (Pref'd Value)	V_{out} (Actual)
2.5 V	576 Ω	2.501V
2 V	3.09 kΩ	2.003 V
1.8 V	4.87 kΩ	1.804 V
1.5 V	9.76 kΩ	1.504 V
1.2 V	24.3 kΩ	1.204 V
1 V	82.5 kΩ	1.002 V
0.9 V	Open	0.9 V

Figure 2-1; V_o Adjust Resistor Placement

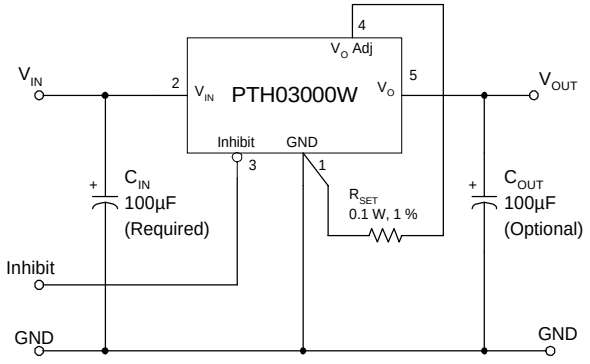

Table 2-2; Output Voltage Set-Point Resistor Values

V_a Req'd	R_{set}	V_a Req'd	R_{set}
0.900	Open	1.50	9.86 kΩ
0.925	351 kΩ	1.55	8.72 kΩ
0.950	173 kΩ	1.60	7.74 kΩ
0.975	114 kΩ	1.65	6.89 kΩ
1.000	84.1 kΩ	1.70	6.15 kΩ
1.025	66.3 kΩ	1.75	5.49 kΩ
1.050	54.4 kΩ	1.80	4.91 kΩ
1.075	45.9 kΩ	1.85	4.39 kΩ
1.100	39.6 kΩ	1.90	3.92 kΩ
1.125	34.6 kΩ	1.95	3.50 kΩ
1.150	30.7 kΩ	2.00	3.11 kΩ
1.175	27.4 kΩ	2.05	2.76 kΩ
1.200	24.7 kΩ	2.10	2.44 kΩ
1.225	22.4 kΩ	2.15	2.14 kΩ
1.250	20.5 kΩ	2.20	1.86 kΩ
1.275	18.8 kΩ	2.25	1.61 kΩ
1.300	17.3 kΩ	2.30	1.37 kΩ
1.325	16.0 kΩ	2.35	1.15 kΩ
1.350	14.8 kΩ	2.40	950 Ω
1.375	13.8 kΩ	2.45	758 Ω
1.400	12.8 kΩ	2.50	579 Ω
1.425	12.0 kΩ		
1.450	11.2 kΩ		
1.475	10.5 kΩ		

Notes:

1. Use a 0.1 W resistor. The tolerance should be 1 %, with a temperature stability of 100 ppm/°C (or better). Place the resistor as close to the regulator as possible. Connect the resistor directly between pins 4 and 1 using dedicated PCB traces.
2. Never connect capacitors from *V_o Adjust* to either *GND* or *V_{out}*. Any capacitance added to the *V_o Adjust* pin will affect the stability of the regulator.

Power-Up Characteristics

When configured per their standard application, the PTH03000 and PTH05000 series of power modules will produce a regulated output voltage following the application of a valid input source voltage. During power up, internal soft-start circuitry slows the rate that the output voltage rises, thereby limiting the amount of in-rush current that can be drawn from the input source. The soft-start circuitry introduces a short time delay (typically 10 ms) into the power-up characteristic. This is from the point that a valid input source is recognized. Figure 3-1 shows the power-up waveforms for a PTH05000W (5-V input), with the output voltage set point adjusted for a 2-V output. The waveforms were measured with a 5-A resistive load. The initial rise in input current when the input voltage first starts to rise is the charge current drawn by the input capacitors.

Figure 3-1

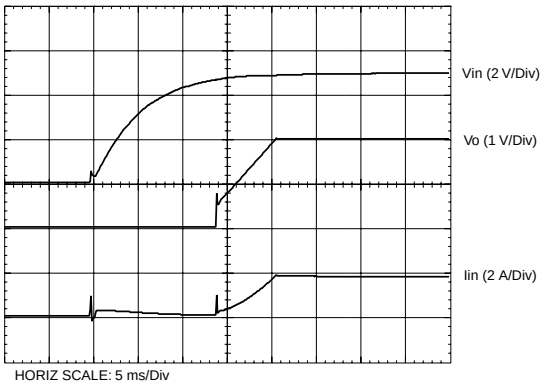

Current Limit Protection

The PTHxx000W modules protect against load faults with a continuous current limit characteristic. Under a load fault condition the output current cannot exceed the current limit value. Attempting to draw current that exceeds the current limit value causes the output voltage to be progressively reduced. Current is continuously supplied to the fault until it is removed. Upon removal of the fault, the output voltage will promptly recover.

Thermal Shutdown

Thermal shutdown protects the module's internal circuitry against excessively high temperatures. A rise in temperature may be the result of a drop in airflow, a high ambient temperature, or a sustained current limit condition. If the junction temperature of the internal components exceed 150 °C, the module will shutdown. This reduces the output voltage to zero. The module will start up automatically, by initiating a soft-start power up when the sensed temperature decreases 10 °C below the thermal shutdown trip point.

Output On/Off Inhibit

For applications requiring output voltage on/off control, the PTH03000W & PTH05000W power modules incorporate an output on/off *Inhibit* control (pin 3). The inhibit feature can be used wherever there is a requirement for the output voltage from the regulator to be turned off.

The power module functions normally when the *Inhibit* pin is left open-circuit, providing a regulated output whenever a valid source voltage is connected to V_{in} with respect to *GND*.

Figure 3-2 shows the typical application of the inhibit function. Note the discrete transistor (Q_1). The *Inhibit* control has its own internal pull-up to V_{in} potential. An open-collector or open-drain device is recommended to control this input.

Turning Q_1 on applies a low voltage to the *Inhibit* control pin and disables the output of the module. If Q_1 is then turned off, the module will execute a soft-start power-up sequence. A regulated output voltage is produced within 20 msec. Figure 3-3 shows the typical rise in the output voltage, following the turn-off of Q_1. The turn off of Q_1 corresponds to the fall in the waveform, Q_1 V_{gs}. The waveforms were measured with a 5-A resistive load.

Figure 3-2

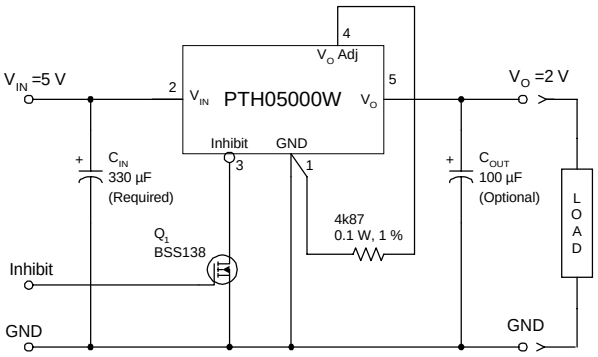

Figure 3-3

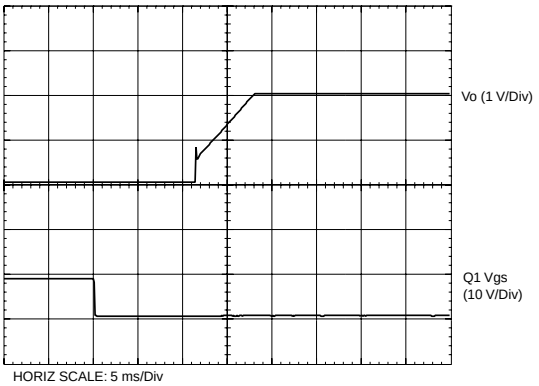

PACKAGING INFORMATION

Orderable Device	Status (1)	Package Type	Package Drawing	Pins	Package Qty	Eco Plan (2)	Lead/Ball Finish	MSL Peak Temp (3)	Op Temp (°C)	Top-Side Markings (4)	Samples
PTH03000WAD	ACTIVE	Through-Hole Module	EUS	5	56	Pb-Free (RoHS)	SN	N / A for Pkg Type			Samples
PTH03000WAH	ACTIVE	Through-Hole Module	EUS	5	56	Pb-Free (RoHS)	SN	N / A for Pkg Type	-40 to 85		Samples
PTH03000WAS	ACTIVE	Surface Mount Module	EUT	5	49	TBD	SNPB	Level-1-235C-UNLIM/ Level-3-260C-168HRS	-40 to 85		Samples
PTH03000WAST	ACTIVE	Surface Mount Module	EUT	5	250	TBD	SNPB	Level-1-235C-UNLIM/ Level-3-260C-168HRS			Samples
PTH03000WAZ	ACTIVE	Surface Mount Module	EUT	5	49	Pb-Free (RoHS)	SNAGCU	Level-3-260C-168 HR	-40 to 85		Samples
PTH03000WAZT	ACTIVE	Surface Mount Module	EUT	5	250	Pb-Free (RoHS)	SNAGCU	Level-3-260C-168 HR	-40 to 85		Samples

(1) The marketing status values are defined as follows:
ACTIVE: Product device recommended for new designs.
LIFEBUY: TI has announced that the device will be discontinued, and a lifetime-buy period is in effect.
NRND: Not recommended for new designs. Device is in production to support existing customers, but TI does not recommend using this part in a new design.
PREVIEW: Device has been announced but is not in production. Samples may or may not be available.
OBSOLETE: TI has discontinued the production of the device.

(2) Eco Plan - The planned eco-friendly classification: Pb-Free (RoHS), Pb-Free (RoHS Exempt), or Green (RoHS & no Sb/Br) - please check http://www.ti.com/productcontent for the latest availability information and additional product content details.
TBD: The Pb-Free/Green conversion plan has not been defined.
Pb-Free (RoHS): TI's terms "Lead-Free" or "Pb-Free" mean semiconductor products that are compatible with the current RoHS requirements for all 6 substances, including the requirement that lead not exceed 0.1% by weight in homogeneous materials. Where designed to be soldered at high temperatures, TI Pb-Free products are suitable for use in specified lead-free processes.
Pb-Free (RoHS Exempt): This component has a RoHS exemption for either 1) lead-based flip-chip solder bumps used between the die and package, or 2) lead-based die adhesive used between the die and leadframe. The component is otherwise considered Pb-Free (RoHS compatible) as defined above.
Green (RoHS & no Sb/Br): TI defines "Green" to mean Pb-Free (RoHS compatible), and free of Bromine (Br) and Antimony (Sb) based flame retardants (Br or Sb do not exceed 0.1% by weight in homogeneous material)

(3) MSL, Peak Temp. -- The Moisture Sensitivity Level rating according to the JEDEC industry standard classifications, and peak solder temperature.

(4) Multiple Top-Side Markings will be inside parentheses. Only one Top-Side Marking contained in parentheses and separated by a "~" will appear on a device. If a line is indented then it is a continuation of the previous line and the two combined represent the entire Top-Side Marking for that device.

Important Information and Disclaimer: The information provided on this page represents TI's knowledge and belief as of the date that it is provided. TI bases its knowledge and belief on information provided by third parties, and makes no representation or warranty as to the accuracy of such information. Efforts are underway to better integrate information from third parties. TI has taken and continues to take reasonable steps to provide representative and accurate information but may not have conducted destructive testing or chemical analysis on incoming materials and chemicals. TI and TI suppliers consider certain information to be proprietary, and thus CAS numbers and other limited information may not be available for release.

In no event shall TI's liability arising out of such information exceed the total purchase price of the TI part(s) at issue in this document sold by TI to Customer on an annual basis.

EUS (R–PDSS–T5)

DOUBLE SIDED MODULE

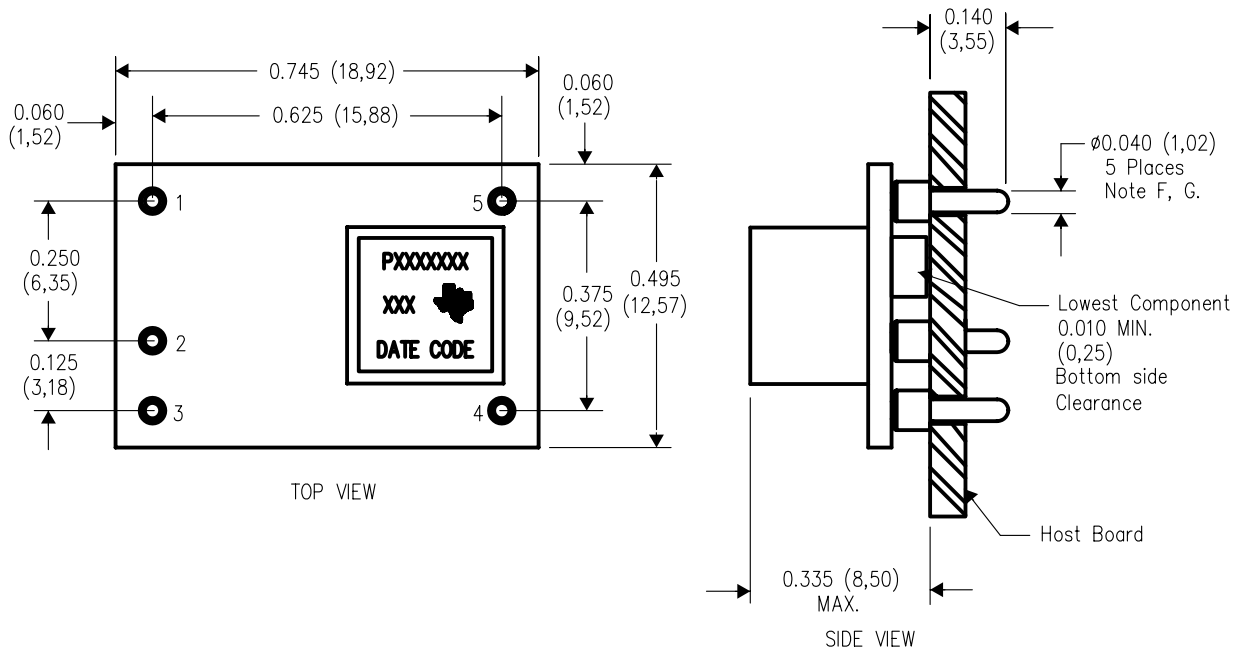

NOTES:
A. All linear dimensions are in inches (mm).
B. This drawing is subject to change without notice.
C. 2 place decimals are ±0.030 (±0,76mm).
D. 3 place decimals are ±0.010 (±0,25mm).
E. Recommended keep out area for user components.
F. Pins are 0.040" (1,02) diameter with 0.070" (1,78) diameter standoff shoulder.
G. All pins: Material – Copper Alloy
Finish – Tin (100%) over Nickel plate

EUT (R–PDSS–B5) DOUBLE SIDED MODULE

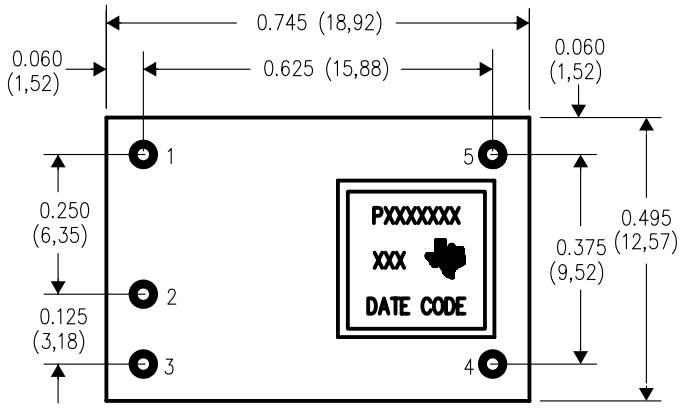

TOP VIEW

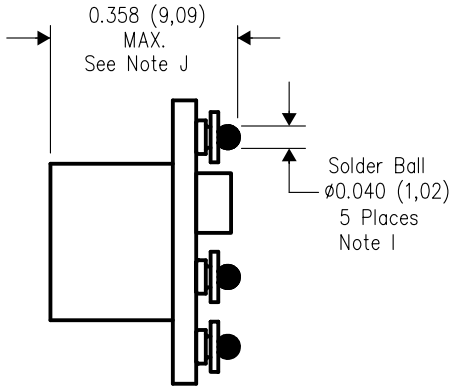

SIDE VIEW

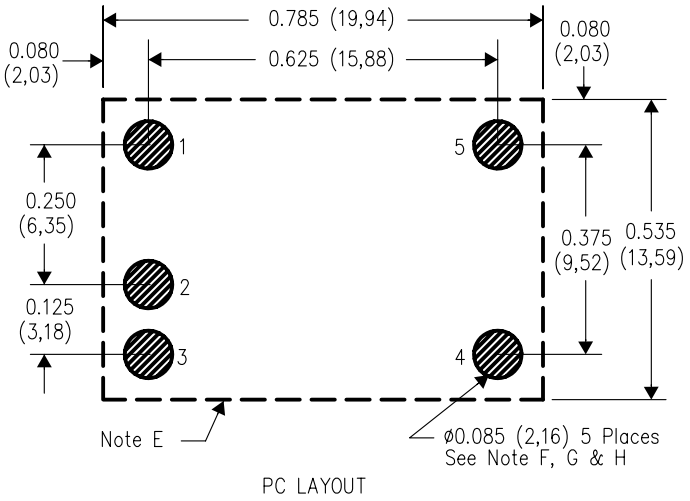

PC LAYOUT

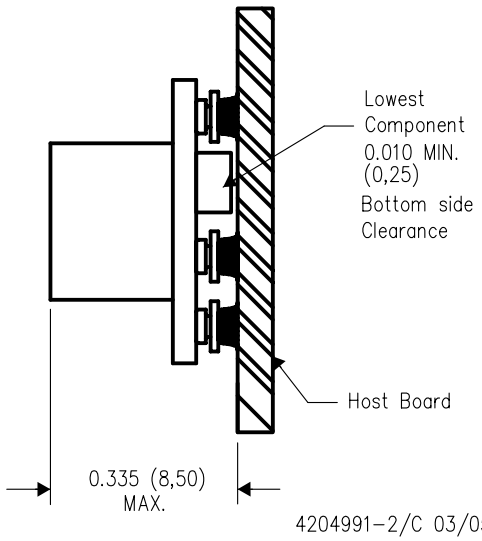

4204991–2/C 03/05

NOTES:
A. All linear dimensions are in inches (mm).
B. This drawing is subject to change without notice.
C. 2 place decimals are ±0.030 (±0,76mm).
D. 3 place decimals are ±0.010 (±0,25mm).
E. Recommended keep out area for user components.
F. Power pin connection should utilize two or more vias to the interior power plane of 0.025 (0,63) I.D. per input, ground and output pin (or the electrical equivalent).
G. Paste screen opening: 0.080 (2,03) to 0.085 (2,16). Paste screen thickness: 0.006 (0,15).
H. Pad type: Solder mask defined.
I. All pins: Material – Copper Alloy
Finish – Tin (100%) over Nickel plate
Solder Ball – See product data sheet.
J. Dimension prior to reflow solder.

IMPORTANT NOTICE

Texas Instruments Incorporated and its subsidiaries (TI) reserve the right to make corrections, enhancements, improvements and other changes to its semiconductor products and services per JESD46, latest issue, and to discontinue any product or service per JESD48, latest issue. Buyers should obtain the latest relevant information before placing orders and should verify that such information is current and complete. All semiconductor products (also referred to herein as “components”) are sold subject to TI’s terms and conditions of sale supplied at the time of order acknowledgment.

TI warrants performance of its components to the specifications applicable at the time of sale, in accordance with the warranty in TI’s terms and conditions of sale of semiconductor products. Testing and other quality control techniques are used to the extent TI deems necessary to support this warranty. Except where mandated by applicable law, testing of all parameters of each component is not necessarily performed.

TI assumes no liability for applications assistance or the design of Buyers’ products. Buyers are responsible for their products and applications using TI components. To minimize the risks associated with Buyers’ products and applications, Buyers should provide adequate design and operating safeguards.

TI does not warrant or represent that any license, either express or implied, is granted under any patent right, copyright, mask work right, or other intellectual property right relating to any combination, machine, or process in which TI components or services are used. Information published by TI regarding third-party products or services does not constitute a license to use such products or services or a warranty or endorsement thereof. Use of such information may require a license from a third party under the patents or other intellectual property of the third party, or a license from TI under the patents or other intellectual property of TI.

Reproduction of significant portions of TI information in TI data books or data sheets is permissible only if reproduction is without alteration and is accompanied by all associated warranties, conditions, limitations, and notices. TI is not responsible or liable for such altered documentation. Information of third parties may be subject to additional restrictions.

Resale of TI components or services with statements different from or beyond the parameters stated by TI for that component or service voids all express and any implied warranties for the associated TI component or service and is an unfair and deceptive business practice. TI is not responsible or liable for any such statements.

Buyer acknowledges and agrees that it is solely responsible for compliance with all legal, regulatory and safety-related requirements concerning its products, and any use of TI components in its applications, notwithstanding any applications-related information or support that may be provided by TI. Buyer represents and agrees that it has all the necessary expertise to create and implement safeguards which anticipate dangerous consequences of failures, monitor failures and their consequences, lessen the likelihood of failures that might cause harm and take appropriate remedial actions. Buyer will fully indemnify TI and its representatives against any damages arising out of the use of any TI components in safety-critical applications.

In some cases, TI components may be promoted specifically to facilitate safety-related applications. With such components, TI’s goal is to help enable customers to design and create their own end-product solutions that meet applicable functional safety standards and requirements. Nonetheless, such components are subject to these terms.

No TI components are authorized for use in FDA Class III (or similar life-critical medical equipment) unless authorized officers of the parties have executed a special agreement specifically governing such use.

Only those TI components which TI has specifically designated as military grade or “enhanced plastic” are designed and intended for use in military/aerospace applications or environments. Buyer acknowledges and agrees that any military or aerospace use of TI components which have ***not*** been so designated is solely at the Buyer's risk, and that Buyer is solely responsible for compliance with all legal and regulatory requirements in connection with such use.

TI has specifically designated certain components as meeting ISO/TS16949 requirements, mainly for automotive use. In any case of use of non-designated products, TI will not be responsible for any failure to meet ISO/TS16949.

Products		**Applications**	
Audio	www.ti.com/audio	Automotive and Transportation	www.ti.com/automotive
Amplifiers	amplifier.ti.com	Communications and Telecom	www.ti.com/communications
Data Converters	dataconverter.ti.com	Computers and Peripherals	www.ti.com/computers
DLP® Products	www.dlp.com	Consumer Electronics	www.ti.com/consumer-apps
DSP	dsp.ti.com	Energy and Lighting	www.ti.com/energy
Clocks and Timers	www.ti.com/clocks	Industrial	www.ti.com/industrial
Interface	interface.ti.com	Medical	www.ti.com/medical
Logic	logic.ti.com	Security	www.ti.com/security
Power Mgmt	power.ti.com	Space, Avionics and Defense	www.ti.com/space-avionics-defense
Microcontrollers	microcontroller.ti.com	Video and Imaging	www.ti.com/video
RFID	www.ti-rfid.com		
OMAP Applications Processors	www.ti.com/omap	**TI E2E Community**	e2e.ti.com
Wireless Connectivity	www.ti.com/wirelessconnectivity		

Mailing Address: Texas Instruments, Post Office Box 655303, Dallas, Texas 75265
Copyright © 2013, Texas Instruments Incorporated