PT8300BT

3mm Lamp Type Photo Transistor

Features

- High photo sensitivity
- High reliability
- Spectral range of sensitivity: 760-1100nm
- Fast Response time
- RoHS compliance

Description

The PT8300BT is silicon NPN Phototransistor.

The device comes with a superior filtering for visible light by utilizing special black epoxy.

Applications

- Infrared sensor
- Optical switches

Package Outline

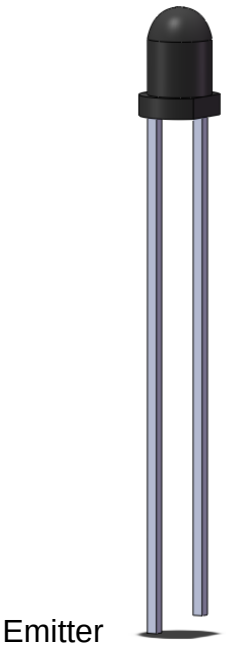

Schematic

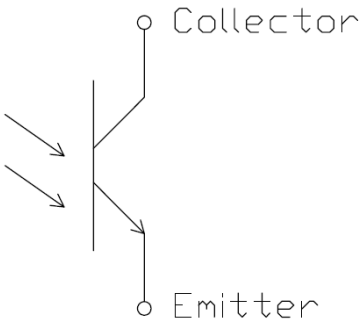

Absolute Maximum Rating at 25^{0}C

Symbol	*Parameters*	*Ratings*	*Units*	*Notes*
I_C	Collector Current	20	mA	
B_{VCEO}	Collector-Emitter Voltage	35	V	1
B_{VECO}	Emitter-Collector Voltage	5	V	2
T_{opr}	Operating Temperature	-40 ~ +85	^{0}C	
T_{stg}	Storage Temperature	-40 ~ +100	^{0}C	
T_{sol}	Soldering Temperature	260	^{0}C	3
P_{to}	Total Power Dissipation	150	mW	

Optical Characteristics

Symbol	*Parameters*	*Test Conditions*	*Min*	*Typ*	*Max*	*Units*	*Notes*
λ	Spectral Bandwidth	-	760	-	1100	nm	
λ_P	Peak Sensitivity	-	-	880	-	nm	
θ1/2	View Angle	V_{CE}=5V	-	±25	-	deg	

Electrical Characteristics

Symbol	*Parameters*	*Test Conditions*	*Min*	*Typ*	*Max*	*Units*	*Notes*
I_{CEO}	Dark Current	Ee=0mW /cm^2 V_{CE}=20V	-	-	100	nA	
$V_{CE(sat)}$	Collector-Emitter Saturation Voltage	Ee=1mW /cm^2 I_C=0.9mA	-	-	0.4	V	
I_C	Collector Light Current	Ee=1mW /cm^2 λ_P=940nm, V_{CE}=5V	0.9	3.0	6.4	mA	4
C_T	Terminal Capacitance	Ee=0mW /cm^2 f=1MHz ,V_{CE}=5V	-	3.80	-	pF	

Switching Characteristics

Symbol	*Parameters*	*Test Conditions*	*Min*	*Typ*	*Max*	*Units*	*Notes*
t_r	Rise Time	V_{ce} = 5V, R_L = 100Ω I_C=1.0mA	-	6	-	μs	5
t_f	Fall Time		-	7	-		
t_{on}	Turn on Delay Time		-	11	-		
t_{off}	Turn off Delay Time		-	7.9	-		

Notes:

1 : Test conditions : I_C=100μA, Ee=0mW/cm^2.

2 : Test conditions : I_E=100μA, Ee=0mW/cm^2.

3 : Soldering time≦5 seconds.

4 : Ic Bin Rank :

Bin Code	T2	T3	T4	T5
Min	0.9	1.4	2	3.2
Max	1.8	2.8	4	6.4

5 : Test circuit :

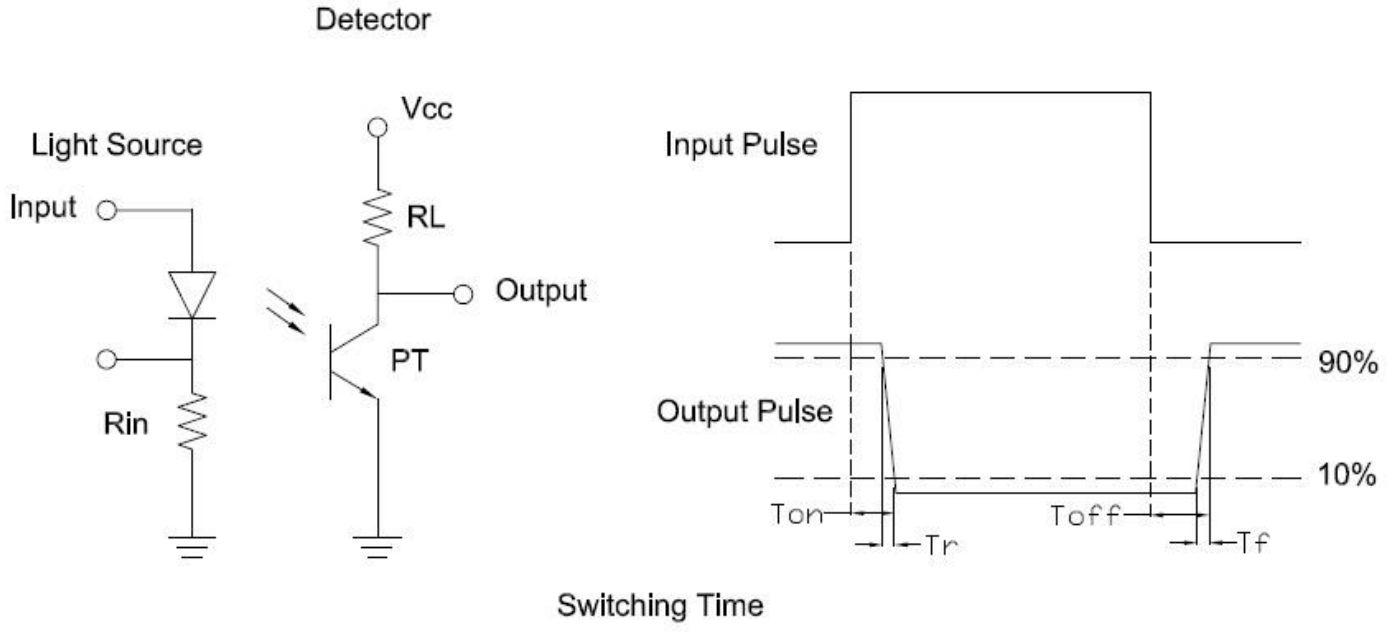

Switching Time

Typical Characteristic Curves

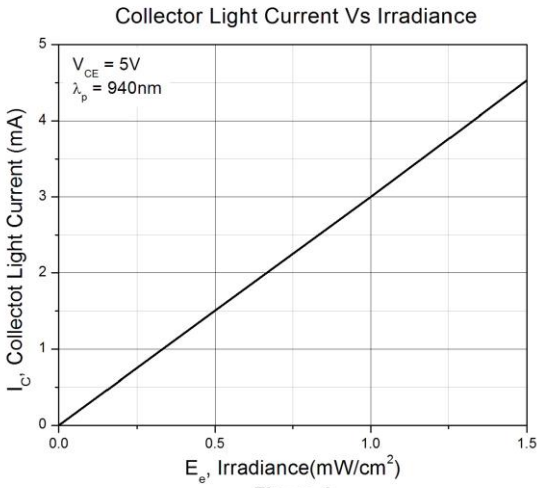

Figure 1

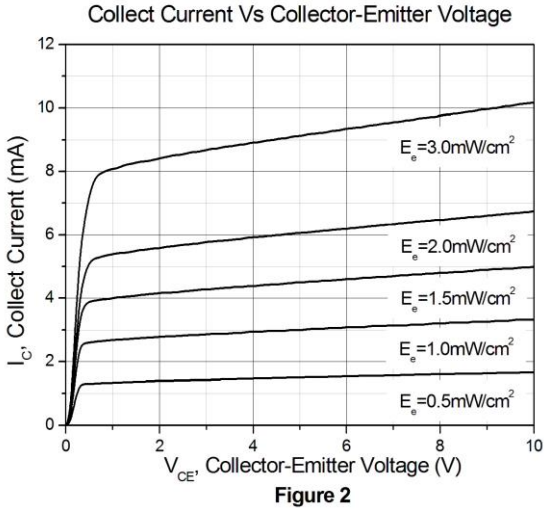

Figure 2

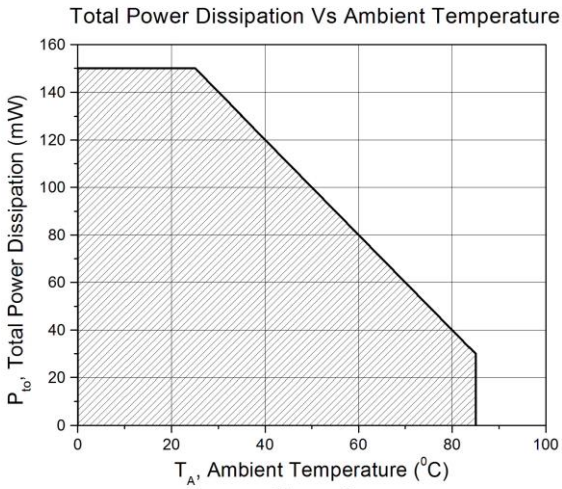

Figure 3

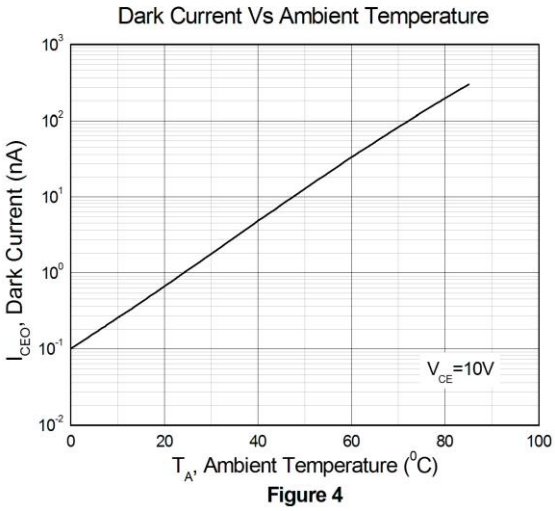

Figure 4

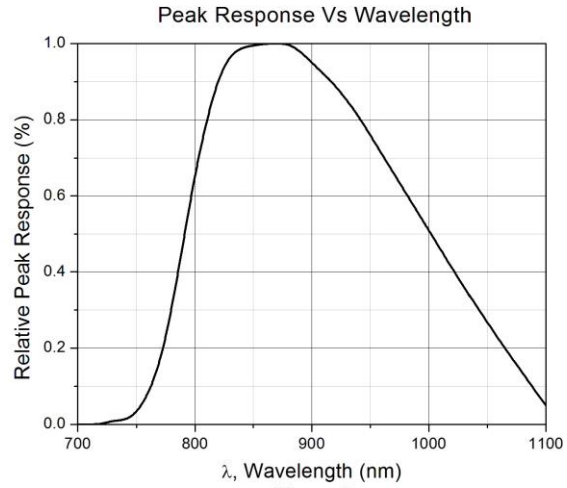

Figure 5

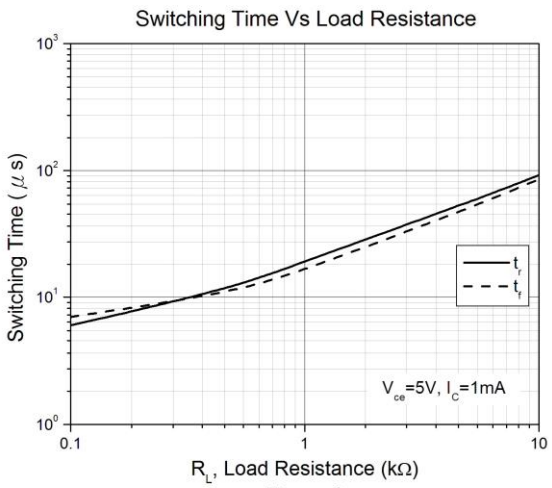

Figure 6

Typical Characteristic Curves

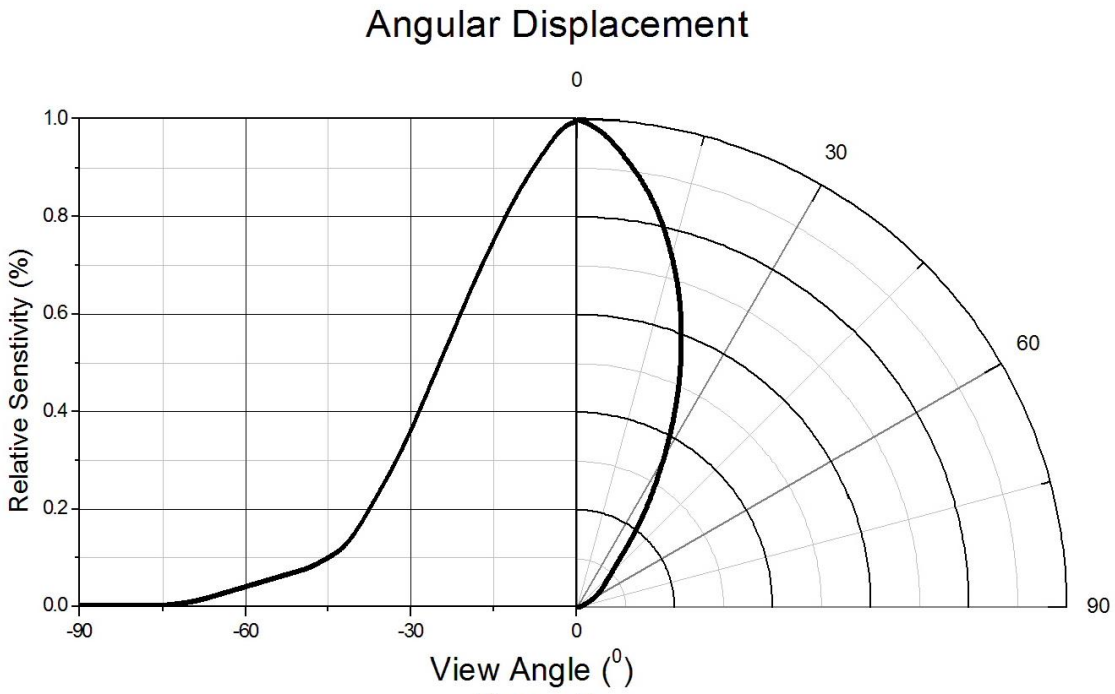

Figure 7

Package Dimension *All dimensions are in mm, unless otherwise stated.*

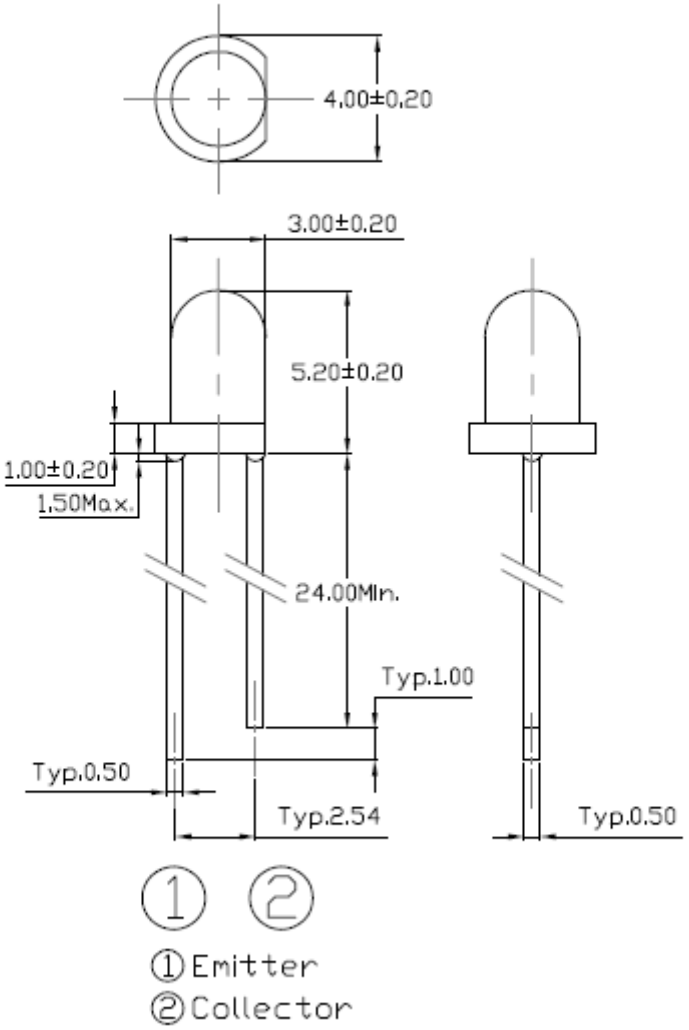

Ordering Information

PT8300BT/(XX)(YYY)

XX = TR – Tape & Reel / TB – Tape & Box
YYY = H; H- Refer to Tape dimension drawing (255 = 25.5mm)

Part Number	***Description***	***Quantity***
PT8300BT	1 Bag	500 pcs
	1 Box	10 bag
	1 Carton	8 box
PT8300BT/TR(H) Tape & Reel	1 Reel	1000 pcs
	1 Carton	8 box
PT8300BT/TB(H) Tape & Box	1 Box	2000pcs
	1 Carton	8 box

Tape Dimension *All dimensions are in mm, unless otherwise stated.*

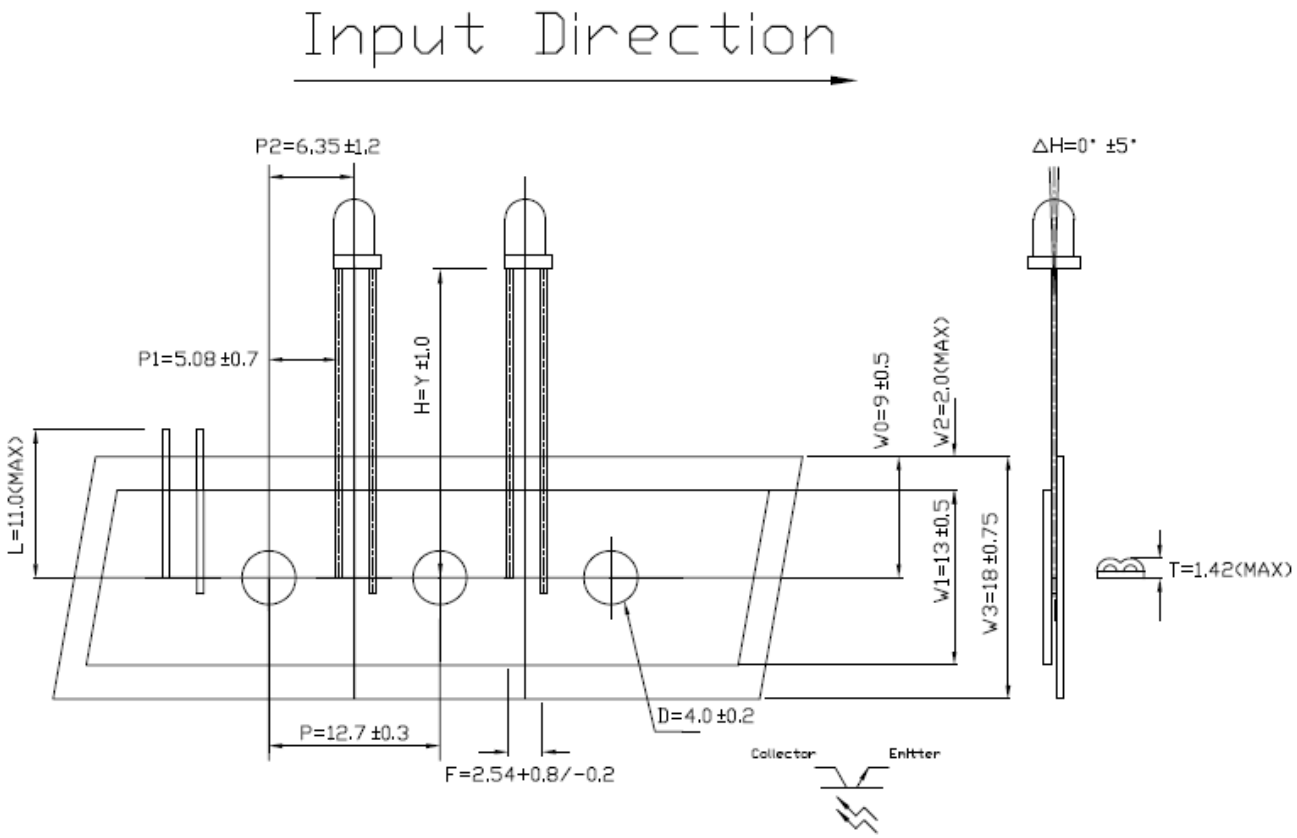

DISCLAIMER

CT MICRO RESERVES THE RIGHT TO MAKE CHANGES WITHOUT FURTHER NOTICE TO ANY PRODUCTS HEREIN TO IMPROVE RELIABILITY, FUNCTION OR DESIGN. CT MICRO DOES NOT ASSUME ANY LIABILITY ARISING OUT OF THE APPLICATION OR USE OF ANY PRODUCT OR CIRCUIT DESCRIBED HEREIN; NEITHER DOES IT CONVEY ANY LICENSE UNDER ITS PATENT RIGHTS, NOR THE RIGHTS OF OTHERS.

CT MICRO ARE NOT AUTHORIZED FOR USE AS CRITICAL COMPONENTS IN LIFE SUPPORT DEVICES OR SYSTEMS WITHOUT EXPRESS WRITTEN APPROVAL OF CT MICRO INTERNATIONAL CORPORATION.

1. *Life support devices or systems are devices or systems which, (a) are intended for surgical implant into the body, or (b) support or sustain life, or (c) whose failure to perform when properly used in accordance with instruction for use provided in the labelling, can be reasonably expected to result in significant injury to the user.*
2. *A critical component is any component of a life support device or system whose failure to perform can be reasonably expected to cause the failure of the life support device or system, or to affect its safety or effectiveness.*