DESCRIPTION

The PT6907 is a buck LED driver which has linear dimming function with normal switch ON/OFF. While turning-on the switch first time, the LED current will increase from the minimum value to the maximum current during about 9 seconds. The PT6907 builds-in exponential algorithm and the LED's brightness changes smoothly and linearly. During the dimming processing, you can turn-off the switch when the LED's brightness reaches the level you want. The PT6907 can remember and hold the status for a certain time which is programmable after turned-off. You should turn-on the switch again within this holding time. Then the output stays at remembered level. If you don't turn-off the switch during dimming processing, the output will increase to the maximum value and hold the status finally.

The PT6907 also integrates 10bit DAC. It is flexible for synchronous application. You can use only one switch to control the group LED lamps. They change synchronously using the power line AC clock.

The PT6907 operates in open loop current mode control, and the controller achieves good output current regulation without the need for any loop compensation. Also, the PT6907 operates in constant frequency mode. The frequency is set as 50KHz.

FEATURES

- 8V to 12V Input Voltage Range
- Low Start-up Current
- Constant Frequency Operation, 50kHz typical
- Open Loop Peak Current Controller
- Linear Dimming with Normal Switch On/Off
- Programmable Holding Time
- Dimming with Exponential Algorithm, More Suitable for Human Eyes.
- 10bit DAC Integrated for Synchronous Application, More Flexible for Group Control
- Normal Switch Compatible
- SOP8 Package

APPLICATIONS

- Offline LED Lamps and Fixtures
- Office and Home LED Lightings
- LED Table Lamps
- Signage and Decorative LED Lightings

BLOCK DIAGRAM

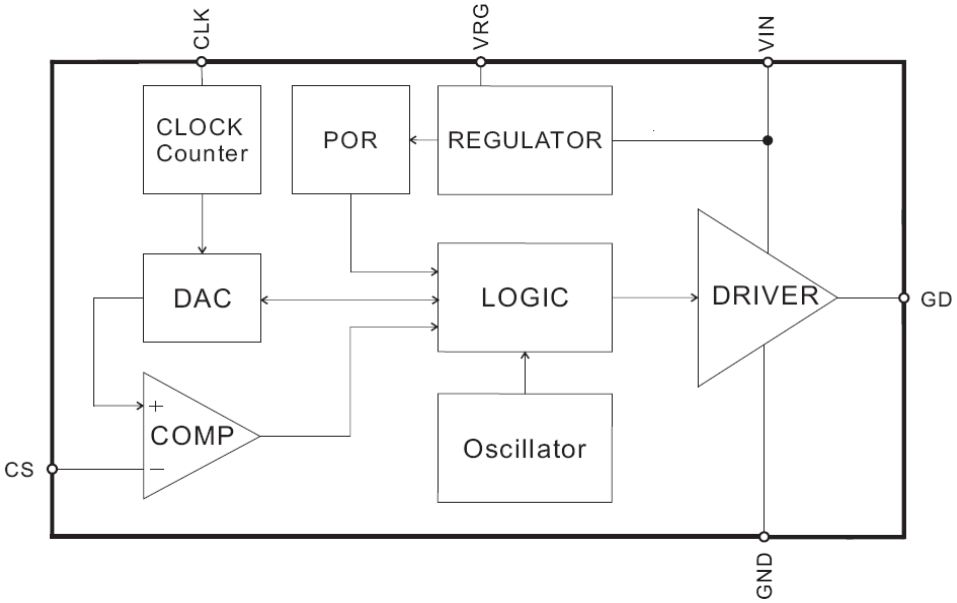

TYPICAL APPLICATION

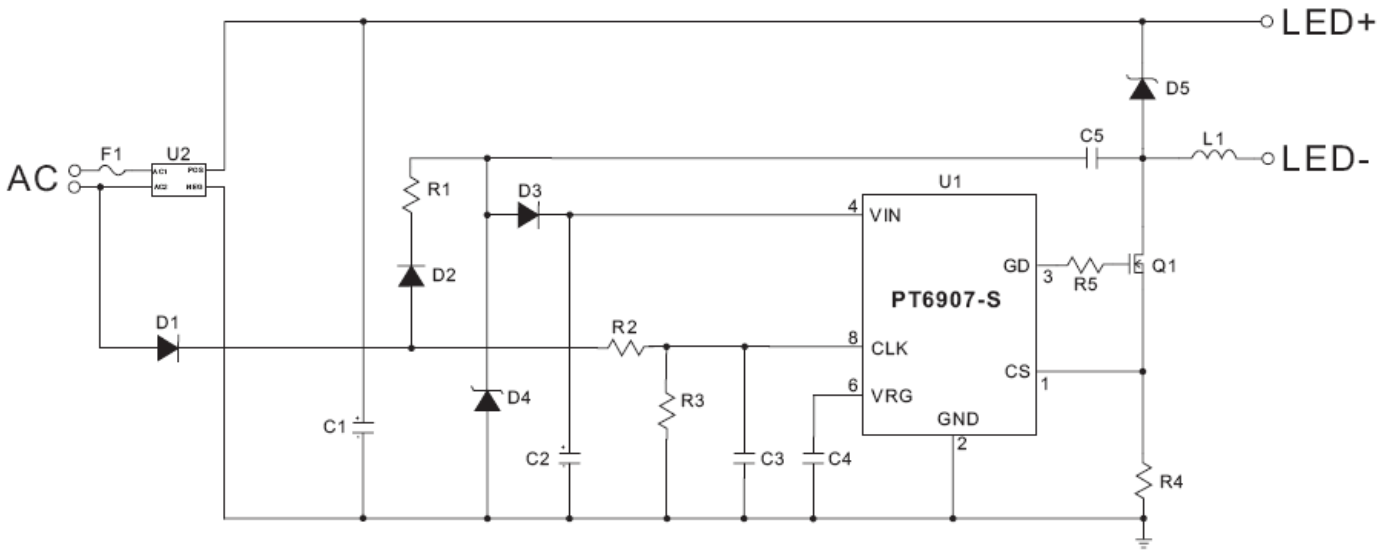

ORDER INFORMATION

Valid Part Number	Package Type	Top Code
PT6907-S	8 Pins, SOP, 150MIL	PT6907-S

PIN CONFIGURATION

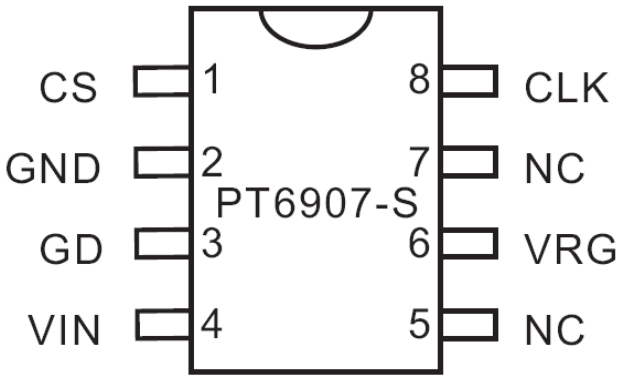

PIN DESCRIPTION

Pin Name	Description	Pin No.
CS	LED Current Sense. When the voltage of CS pin exceeds the internal threshold voltage, the GD output goes low.	1
GND	IC Ground.	2
GD	External MOSFET Gate Drive.	3
VIN	Input Supply Voltage 8V~12V/DC.	4
NC	No Connection	5
VRG	Status Remember Register. Connect a capacitor to ground. It's used for internal register during switch off. The holding time is programmable with this capacitor.	6
NC	No Connection	7
CLK	Clock Input for DAC. This pin is connected to AC clock signal to change the output. It is useful for synchronous application in group control.	8

IMPORTANT NOTICE

Princeton Technology Corporation (PTC) reserves the right to make corrections, modifications, enhancements, improvements, and other changes to its products and to discontinue any product without notice at any time.
PTC cannot assume responsibility for use of any circuitry other than circuitry entirely embodied in a PTC product. No circuit patent licenses are implied.

Princeton Technology Corp.
2F, 233-1, Baociao Road,
Sindian, Taipei 23145, Taiwan
Tel: 886-2-66296288
Fax: 886-2-29174598
http://www.princeton.com.tw