9 Amp 5V/3.3V Input Adjustable Integrated Switching Regulator

SLTS035A

(Revised 6/30/2000)

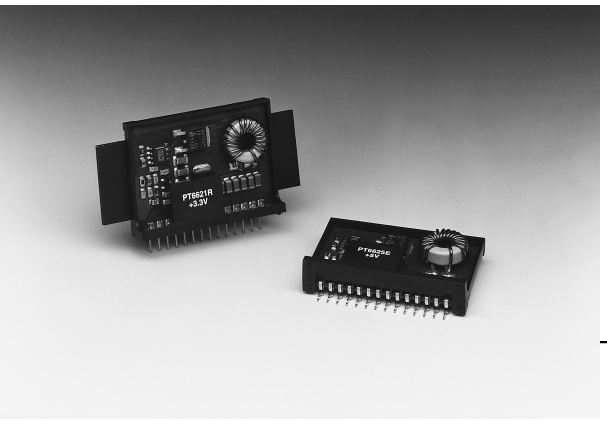

- Single Device 9A Output
- Input Voltage Range: 3.1V to 6.0V
- Adjustable Output Voltage
- 90% Efficiency
- Remote Sense Capability
- Standby Function
- Over-Temperature Protection

The PT6600 series is a high performance family of 14-Pin SIP (Single In-line Package) Integrated Switching Regulators (ISRs), designed for stand-alone operation in applications requiring as much as 9A of output current.

The PT6600 series will operate off either a 3.3V or 5V input bus and requires only two external capacitors for proper operation. Please note that this product does not include short circuit protection.

Standard Application

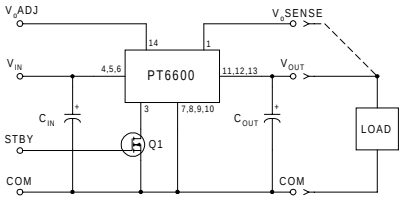

C_1 = Required 330µF electrolytic (1)
C_2 = Required 330µF electrolytic (1)
Q_1= NFET-or Open Collector Gate

Pin-Out Information

Pin	Function
1	Remote Sense
2	Do not connect
3	STBY*-Standby
4	V_{in}
5	V_{in}
6	V_{in}
7	GND
8	GND
9	GND
10	GND
11	V_{out}
12	V_{out}
13	V_{out}
14	V_{out} Adjust

Ordering Information

PT6601☐ = +3.3 Volts
† **PT6602☐** = +1.5 Volts
PT6603☐ = +2.5 Volts
PT6604☐ = +3.6 Volts
† **PT6605☐** = +1.2 Volts
† **PT6606☐** = +1.8 Volts

†3.3V Input Bus Capable

PT Series Suffix (PT1234X)

Case/Pin Configuration	Heat Spreader	Heat Spreader with Side Tabs
Vertical Through-Hole	P	R
Horizontal Through-Hole	D	G
Horizontal Surface Mount	E	B

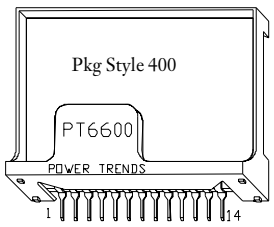

Note: Back surface of product is conducting metal.

Specifications

Characteristics (T_a = 25°C unless noted)	Symbols	Conditions		PT6600 SERIES Min	Typ	Max	Units
Output Current	I_o	T_a = 60°C, 200 LFM, pkg P T_a = 25°C, natural convection		0.1 (2) 0.1 (2)	— —	9.0 (4) 7.0 (4)	A
Input Voltage Range	V_{in}	0.1A ≤ I_o ≤ 8.0A	V_o= +2.5/3.3V V_o ≤ 1.8V V_o= +3.6V	4.5 3.1 4.8	— — —	6.0 6.0 6.0	V
Output Voltage Tolerance	ΔV_o	V_{in} = +5V, I_o = 8.0A T_a = 0°C to 65°C		V_o-0.1	—	V_o+0.1	V
Output Voltage Adjust Range	V_{oadj}	Pin 14 to V_o or ground V_{in}min=+3.1V or V_o+1.2V (whichever is greater)	V_o= +3.3V V_o= +1.5V V_o= +2.5V V_o= +3.6V	2.25 1.27 1.80 2.50	— — — —	4.20 2.65 3.50 4.30	V
Line Regulation	Reg_{line}	4.5V ≤ V_{in} ≤ 6.0V, I_o = 8.0A 3.1V ≤ V_{in} ≤ 6.0V, I_o = 8.0A 4.5V ≤ V_{in} ≤ 6.0V, I_o = 8.0A	V_o= +3.3V V_o= +1.5V V_o= +2.5V	— — —	±7 ±3 ±7	±17 ±8 ±13	mV
Load Regulation	Reg_{load}	V_{in} = +5V, 0.1 ≤ I_o ≤ 8.0A	V_o= +3.3V V_o= +1.5V V_o= +2.5V	— — —	±17 ±12 ±13	±33 ±23 ±25	mV
V_o Ripple/Noise	V_n	V_{in} = 5V, I_o = 8.0A		—	50	—	mVpp
Transient Response with C_2 = 330µF	t_{tr} V_{os}	I_o step between 4.0A and 8.0A V_o over/undershoot		— —	100 150	— —	µSec mV
Efficiency	η	V_{in} = +5V, I_o = 3.0A	V_o = +3.3/3.6V V_o = +1.5V V_o = +2.5V	— — —	90 76 85	— — —	%
		V_{in} = +5V, I_o = 8.0A	V_o = +3.3/3.6V V_o = +1.5V V_o = +2.5V	— — —	83 68 76	— — —	%
Switching Frequency	f_o	3.1V ≤ V_{in} ≤ 6.0V 0.1A ≤ I_o ≤ 8.0A		475	600	725	kHz
Absolute Maximum Operating Temperature Range	T_a	Over V_{in} range		–40 (3)	—	+85 (4)	°C
Thermal Resistance	θ_{ja}	Free Air Convection (40-60 LFM)		—	25	—	°C/W

Continued

Specifications (continued)

Characteristics (T_a = 25°C unless noted)	Symbols	Conditions	PT6600 SERIES Min	Typ	Max	Units
Storage Temperature	T_s	—	-40	—	+125	°C
Mechanical Shock	—	Per Mil-STD-883D, Method 2002.3	—	500	—	G's
Mechanical Vibration	—	Per Mil-STD-883D, Method 2007.2, 20-2000 Hz, soldered in a PC board	—	7.5	—	G's
Weight	—	—	—	14	—	grams

Notes: *(1) The PT6600 series requires two 330µF electrolytic capacitors (input and output) for proper operation in all applications. The input capacitance must be rated for a minimum of 1.1Arms of ripple current. See the application note, PT6500/6600 Series Capacitor Recommendations.*
(2) ISR will operate down to no load with reduced specifications.
(3) For operation below 0°C, use tantalum capacitors for C_{IN} and C_{OUT}. For more information, contact an Application Specialist.
(4) See Safe Operating Curves, or contact the factory for the appropriate derating.

TYPICAL CHARACTERISTICS

Safe Operating Area Curves (@ V_{in}=+5.0V) (See Note B)

PT6601P (Vertical)

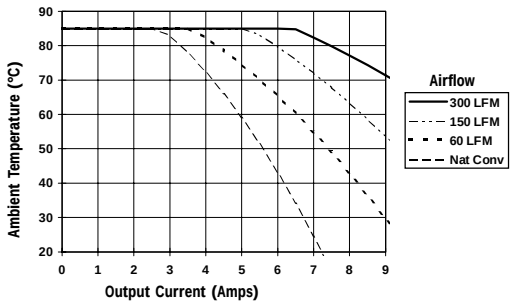

PT6601D (Horizontal)

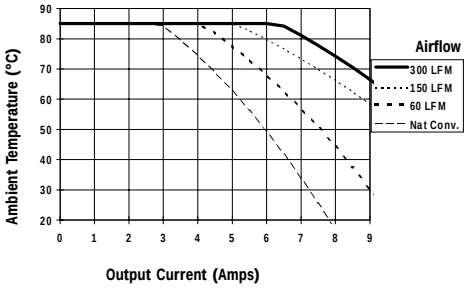

PT6601R (Vertical with Side Tab)

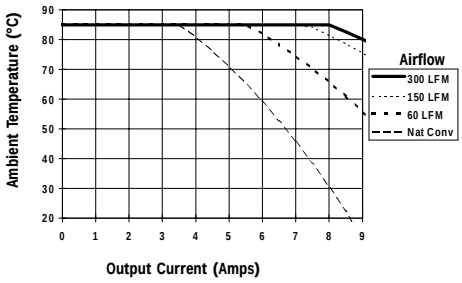

PT6601, 3.3 VDC (See Note A)

Efficiency vs Output Current

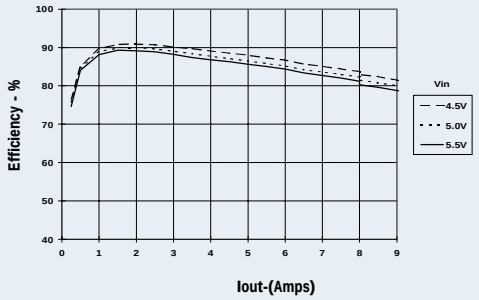

Ripple vs Output Current

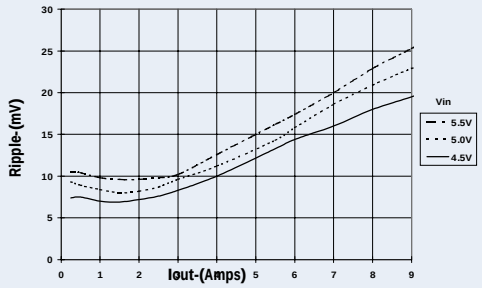

Power Dissipation vs Output Current

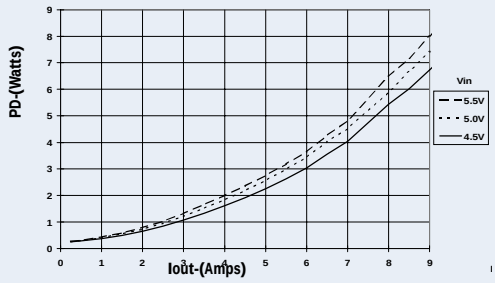

Note A: *All data listed in the above graphs has been developed from actual products tested at 25°C. This data is considered typical data for the ISR.*
Note B: *SOA curves represent operating conditions at which internal components are at or below manufacturer's maximum rated operating temperatures.*

Adjusting the Output Voltage of the PT6600 5V Bus Converters

The output voltage of the Power Trends PT6600 Series ISRs may be adjusted higher or lower than the factory trimmed pre-set voltage with the addition of a single external resistor. Table 1 accordingly gives the allowable adjustment range for each model in the series as V_a (min) and V_a (max).

Adjust Up: An increase in the output voltage is obtained by adding a resistor R2, between pin 14 (V_o adjust) and pins 7-10 (GND).

Adjust Down: Add a resistor (R1), between pin 14 (V_o adjust) and pins 11-13 (V_{out}).

Refer to Figure 1 and Table 2 for both the placement and value of the required resistor, either (R1) or R2 as appropriate.

Notes:

1. Use only a single 1% resistor in either the (R1) or R2 location. Place the resistor as close to the ISR as possible.
2. Never connect capacitors from V_o adjust to either GND, V_{out}, or the Remote Sense pin. Any capacitance added to the V_o adjust pin will affect the stability of the ISR.
3. If the Remote Sense feature is being used, connecting the resistor (R1) between pin 14 (V_o adjust) and pin 1 (Remote Sense) can benefit load regulation.
4. The minimum input voltage required by the part is V_{out} + 1.2 or 3.1V, whichever is higher.

Figure 1

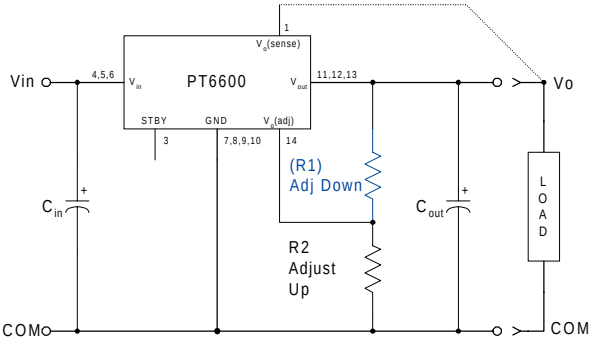

The values of (R1) [adjust down], and R2 [adjust up], can also be calculated using the following formulae.

$$(R1) = \frac{R_o\,(V_a - 1.0)}{(V_o - V_a)} - R_s \quad k\Omega$$

$$R2 = \frac{R_o}{V_a - V_o} - R_s \quad k\Omega$$

Where: V_o = Original output voltage
V_a = Adjusted output voltage
R_o = The resistance value in Table 1
R_s = The series resistance from Table 1

Table 1

PT6600 ADJUSTMENT AND FORMULA PARAMETERS

Series Pt #	PT6605	PT6607	PT6602	PT6608	PT6606	PT6603	PT6601	PT6604
V_O (nom)	1.2	1.3	1.5	1.7	1.8	2.5	3.3	3.6
V_a (min)	1.14	1.19	1.27	1.36	1.4	1.8	2.25	2.5
V_a (max)	2.35	2.45	2.65	2.85	2.95	3.5	4.2	4.3
R_O (kΩ)	2.49	2.49	2.49	2.49	2.49	4.99	12.1	10.0
R_S (kΩ)	2.0	2.0	2.0	2.0	2.0	4.22	12.1	12.1

Table 2

PT6600 ADJUSTMENT RESISTOR VALUES

Series Pt #	PT6605	PT6607	PT6602	PT6608	PT6606	PT6603	PT6601	PT6604
V_o (nom)	1.2	1.3	1.5	1.7	1.8	2.5	3.3	3.6
V_a (req'd)								
1.15	(5.5)kΩ							
1.2		(3.0)kΩ						
1.25	47.8kΩ	(10.5)kΩ						
1.3	22.9kΩ		(1.7)kΩ					
1.35	14.6kΩ	47.8kΩ	(3.8)kΩ					
1.4	10.5kΩ	22.9kΩ	(8.0)kΩ	(1.3)kΩ	(0.5)kΩ			
1.45	8.0kΩ	14.6kΩ	(20.4)kΩ	(2.5)kΩ	(1.2)kΩ			
1.5	6.3kΩ	10.5kΩ		(4.2)kΩ	(2.2)kΩ			
1.55	5.1kΩ	8.0kΩ	47.8kΩ	(7.1)kΩ	(3.5)kΩ			
1.6	4.2kΩ	6.3kΩ	22.9kΩ	(12.9)kΩ	(5.5)kΩ			
1.65	3.5kΩ	4.1kΩ	14.6kΩ	(30.4)kΩ	(8.8)kΩ			
1.7	3.0kΩ	4.2kΩ	10.5kΩ		(15.4)kΩ			
1.75	2.5kΩ	3.5kΩ	8.0kΩ	47.8kΩ	(35.4)kΩ			
1.8	2.2kΩ	3.0kΩ	6.3kΩ	22.9kΩ		(1.5)kΩ		
1.85	1.8kΩ	2.5kΩ	5.1kΩ	14.6kΩ	47.8kΩ	(2.3)kΩ		
1.9	1.6kΩ	2.2kΩ	4.2kΩ	10.5kΩ	22.9kΩ	(3.3)kΩ		
1.95	1.3kΩ	1.8kΩ	3.5kΩ	8.0kΩ	14.6kΩ	(4.4)kΩ		
2.0	1.1kΩ	1.6kΩ	3.0kΩ	6.3kΩ	10.5kΩ	(5.8)kΩ		
2.05	0.9kΩ	1.3kΩ	2.5kΩ	5.1kΩ	8.0kΩ	(7.4)kΩ		
2.1	0.8kΩ	1.1kΩ	2.2kΩ	4.2kΩ	6.3kΩ	(9.5)kΩ		
2.15	0.6kΩ	0.9kΩ	1.8kΩ	3.5kΩ	5.1kΩ	(12.2)kΩ		
2.2	0.5kΩ	0.8kΩ	1.6kΩ	3.0kΩ	4.2kΩ	(15.7)kΩ		
2.25	0.4kΩ	0.6kΩ	1.3kΩ	2.5kΩ	3.5kΩ	(20.7)kΩ	(2.3)kΩ	
2.3	0.3kΩ	0.5kΩ	1.1kΩ	2.2kΩ	3.0kΩ	(28.2)kΩ	(3.6)kΩ	
2.35	0.2kΩ	0.4kΩ	0.9kΩ	1.8kΩ	2.5kΩ	(40.7)kΩ	(5.1)kΩ	
2.4		0.3kΩ	0.8kΩ	1.6kΩ	2.2kΩ	(65.6)kΩ	(6.7)kΩ	
2.45		0.2kΩ	0.6kΩ	1.3kΩ	1.8kΩ	(140.0)kΩ	(8.5)kΩ	
2.5			0.5kΩ	1.1kΩ	1.6kΩ		(10.6)kΩ	(1.5)kΩ
2.55			0.4kΩ	0.9kΩ	1.3kΩ	95.6kΩ	(12.9)kΩ	(2.7)kΩ
2.6			0.3kΩ	0.8kΩ	1.1kΩ	45.7kΩ	(15.6)kΩ	(3.9)kΩ
2.65			0.2kΩ	0.6kΩ	6.9kΩ	29.0kΩ	(18.6)kΩ	(5.3)kΩ
2.7				0.5kΩ	0.8kΩ	20.7kΩ	(22.2)kΩ	(6.8)kΩ
2.75				0.4kΩ	0.6kΩ	15.7kΩ	(26.4)kΩ	(8.5)kΩ
2.8				0.3kΩ	0.5kΩ	12.4kΩ	(31.5)kΩ	(10.4)kΩ
2.85				0.2kΩ	0.4kΩ	10.0kΩ	(37.6)kΩ	(12.6)kΩ
2.9					0.3kΩ	8.3kΩ	(45.4)kΩ	(15.0)kΩ
2.95					0.2kΩ	0.9kΩ	(55.3)kΩ	(17.9)kΩ
3.0						5.8kΩ	(68.6)kΩ	(21.2)kΩ
3.1						4.1kΩ	(115.0)kΩ	(29.9)kΩ
3.2						2.9kΩ	(254.0)kΩ	(42.9)kΩ
3.3						2.0kΩ		(64.6)kΩ
3.4						1.3kΩ	109.0kΩ	(108.0)kΩ
3.5						0.8kΩ	48.4kΩ	(238.0)kΩ
3.6							28.2kΩ	
3.7							18.2kΩ	87.9kΩ
3.8							12.1kΩ	37.9kΩ
3.9	4/. V_{out} >3.8Vdc requires V_{in} >5.0Vdc !						8.1kΩ	21.2kΩ
4.0							5.2kΩ	12.9kΩ
4.1							3.0kΩ	7.9kΩ
4.2							1.3kΩ	4.6kΩ
4.3								2.2kΩ

R1 = (Blue) R2 = Black

Using the Standby Function on the PT6600 5V Bus Converters

For applications requiring output voltage On/Off control, the 14-pin PT6600 ISR series incorporates a standby function. This function may be used in applications that require power-up/shutdown sequencing, and wherever there is a requirement for the output status of the module to be controlled by external circuitry.

The standby function is provided by the *STBY** control, pin 3. If pin 3 is left open-circuit the regulator operates normally, and provides a regulated output when a valid supply voltage is applied to V_{in} (pins 4, 5, & 6) with respect to GND (pins 7-10). If a low voltage[2] is then applied to pin-3 the regulator output will be disabled and the input current drawn by the ISR will drop to less than 50mA[4]. The standby control may also be used to hold-off the regulator output during the period that input power is applied.

The standby control pin is ideally controlled using an open-collector (or open-drain) discrete transistor (See Figure 1). It may also be driven directly from a dedicated TTL[3] compatible gate. Table 1 provides details of the threshold requirements.

Table 1 Inhibit Control Thresholds [2,3]

Parameter	Min	Max
Enable (V_{IH})	1V	5V
Disable (V_{IL})	–0.1V	0.35V

Notes:

1. The Standby/Inhibit control logic is similar for all Power Trends' modules, but the flexibility and threshold tolerances will be different. For specific information on this function for other regulator models, consult the applicable application note.
2. The Standby control pin is ideally controlled using an open-collector (or open-drain) discrete transistor and requires no external pull-up resistor. The control input has an open-circuit voltage of about 1Vdc. To disable the regulator output, the control pin must be pulled to less than 0.35Vdc with a low-level 0.5mA sink to ground.
3. The Standby input on the PT6600 series may be driven by a differential output device, making it compatible with TTL logic. A standard TTL logic gate will meet the 0.35V V_{IL}(max) requirement (Table 1) at 0.5mA I_{OL}. *Do not* use devices that can drive the Standby control input above 5Vdc.
4. When the regulator output is disabled the current drawn from the input source is reduced to approximately 30–40mA (50mA maximum).

Figure 1

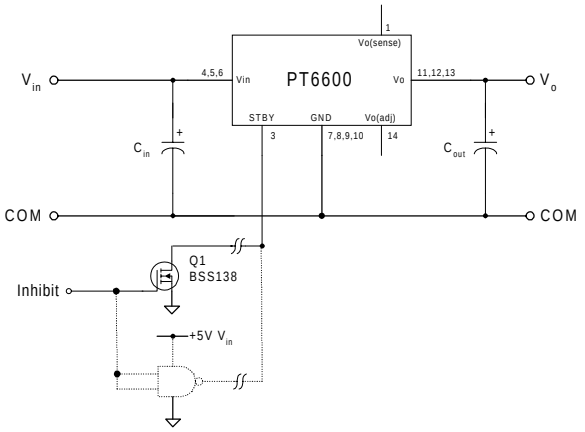

Turn-On Time: In the circuit of Figure 1, turning Q_1 on applies a low voltage to the Standby control (pin 3) and disables the regulator ouput. Correspondingly, turning Q_1 off releases the low-voltage signal and enables the output. The PT6600 ISR series regulators have a fast response and will provide a fully regulated output voltage within 250 µsec. The actual turn-on time will vary with load and the total amount of output capacitance. The waveform of Figure 2 shows the typical output voltage response of a PT6601 (3.3V) following the turn-off of Q_1 at time t = 0.0 secs. The waveform was measured with a 5Vdc input voltage, and 0.6Ω load.

Figure 2

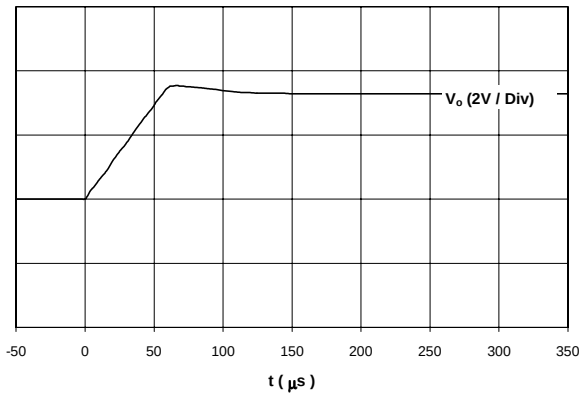

PACKAGING INFORMATION

Orderable Device	Status (1)	Package Type	Package Drawing	Pins	Package Qty	Eco Plan (2)	Lead/Ball Finish (6)	MSL Peak Temp (3)	Op Temp (°C)	Device Marking (4/5)	Samples
PT6601B	OBSOLETE	SIP MODULE	EEK	14		TBD	Call TI	Call TI			
PT6601ET	LIFEBUY	SIP MODULE	EEC	14		TBD	Call TI	Call TI			
PT6601F	LIFEBUY	SIP MODULE	EEF	14		TBD	Call TI	Call TI			
PT6601L	LIFEBUY	SIP MODULE	EEL	14		TBD	Call TI	Call TI			
PT6601Q	LIFEBUY	SIP MODULE	EEQ	14		TBD	Call TI	Call TI			
PT6601S	LIFEBUY	SIP MODULE	EES	14		TBD	Call TI	Call TI			
PT6602F	LIFEBUY	SIP MODULE	EEF	14		TBD	Call TI	Call TI			
PT6602G	LIFEBUY	SIP MODULE	EEG	14		TBD	Call TI	Call TI			
PT6602L	LIFEBUY	SIP MODULE	EEL	14		TBD	Call TI	Call TI			
PT6602M	LIFEBUY	SIP MODULE	EEM	14		TBD	Call TI	Call TI			
PT6602Q	LIFEBUY	SIP MODULE	EEQ	14		TBD	Call TI	Call TI			
PT6602R	LIFEBUY	SIP MODULE	EEE	14		TBD	Call TI	Call TI			
PT6603F	LIFEBUY	SIP MODULE	EEF	14		TBD	Call TI	Call TI			
PT6603G	LIFEBUY	SIP MODULE	EEG	14		TBD	Call TI	Call TI			
PT6603Q	LIFEBUY	SIP MODULE	EEQ	14		TBD	Call TI	Call TI			
PT6603S	LIFEBUY	SIP MODULE	EES	14		TBD	Call TI	Call TI			
PT6604B	NRND	SIP MODULE	EEK	14		TBD	Call TI	Call TI			
PT6604D	NRND	SIP MODULE	EEA	14		TBD	Call TI	Call TI			
PT6604E	NRND	SIP MODULE	EEC	14		TBD	Call TI	Call TI			
PT6604F	NRND	SIP MODULE	EEF	14		TBD	Call TI	Call TI			
PT6604G	NRND	SIP MODULE	EEG	14		TBD	Call TI	Call TI			
PT6604L	NRND	SIP MODULE	EEL	14		TBD	Call TI	Call TI			
PT6604M	NRND	SIP MODULE	EEM	14		TBD	Call TI	Call TI			
PT6604P	NRND	SIP MODULE	EED	14		TBD	Call TI	Call TI			
PT6604Q	NRND	SIP MODULE	EEQ	14		TBD	Call TI	Call TI			
PT6604R	NRND	SIP MODULE	EEE	14		TBD	Call TI	Call TI			
PT6605E	LIFEBUY	SIP MODULE	EEC	14		TBD	Call TI	Call TI			
PT6605ET	OBSOLETE	SIP MODULE	EEC	14		TBD	Call TI	Call TI			
PT6605F	LIFEBUY	SIP MODULE	EEF	14		TBD	Call TI	Call TI			
PT6605G	LIFEBUY	SIP MODULE	EEG	14		TBD	Call TI	Call TI			

Orderable Device	Status (1)	Package Type	Package Drawing	Pins	Package Qty	Eco Plan (2)	Lead/Ball Finish (6)	MSL Peak Temp (3)	Op Temp (°C)	Device Marking (4/5)	Samples
PT6605L	LIFEBUY	SIP MODULE	EEL	14		TBD	Call TI	Call TI			
PT6605M	LIFEBUY	SIP MODULE	EEM	14		TBD	Call TI	Call TI			
PT6605P	LIFEBUY	SIP MODULE	EED	14		TBD	Call TI	Call TI			
PT6605Q	LIFEBUY	SIP MODULE	EEQ	14		TBD	Call TI	Call TI			
PT6605R	LIFEBUY	SIP MODULE	EEE	14		TBD	Call TI	Call TI			
PT6606F	LIFEBUY	SIP MODULE	EEF	14		TBD	Call TI	Call TI			
PT6606L	LIFEBUY	SIP MODULE	EEL	14		TBD	Call TI	Call TI			
PT6606M	LIFEBUY	SIP MODULE	EEM	14		TBD	Call TI	Call TI			
PT6606Q	LIFEBUY	SIP MODULE	EEQ	14		TBD	Call TI	Call TI			

(1) The marketing status values are defined as follows:
ACTIVE: Product device recommended for new designs.
LIFEBUY: TI has announced that the device will be discontinued, and a lifetime-buy period is in effect.
NRND: Not recommended for new designs. Device is in production to support existing customers, but TI does not recommend using this part in a new design.
PREVIEW: Device has been announced but is not in production. Samples may or may not be available.
OBSOLETE: TI has discontinued the production of the device.

(2) Eco Plan - The planned eco-friendly classification: Pb-Free (RoHS), Pb-Free (RoHS Exempt), or Green (RoHS & no Sb/Br) - please check http://www.ti.com/productcontent for the latest availability information and additional product content details.
TBD: The Pb-Free/Green conversion plan has not been defined.
Pb-Free (RoHS): TI's terms "Lead-Free" or "Pb-Free" mean semiconductor products that are compatible with the current RoHS requirements for all 6 substances, including the requirement that lead not exceed 0.1% by weight in homogeneous materials. Where designed to be soldered at high temperatures, TI Pb-Free products are suitable for use in specified lead-free processes.
Pb-Free (RoHS Exempt): This component has a RoHS exemption for either 1) lead-based flip-chip solder bumps used between the die and package, or 2) lead-based die adhesive used between the die and leadframe. The component is otherwise considered Pb-Free (RoHS compatible) as defined above.
Green (RoHS & no Sb/Br): TI defines "Green" to mean Pb-Free (RoHS compatible), and free of Bromine (Br) and Antimony (Sb) based flame retardants (Br or Sb do not exceed 0.1% by weight in homogeneous material)

(3) MSL, Peak Temp. - The Moisture Sensitivity Level rating according to the JEDEC industry standard classifications, and peak solder temperature.

(4) There may be additional marking, which relates to the logo, the lot trace code information, or the environmental category on the device.

(5) Multiple Device Markings will be inside parentheses. Only one Device Marking contained in parentheses and separated by a "~" will appear on a device. If a line is indented then it is a continuation of the previous line and the two combined represent the entire Device Marking for that device.

(6) Lead/Ball Finish - Orderable Devices may have multiple material finish options. Finish options are separated by a vertical ruled line. Lead/Ball Finish values may wrap to two lines if the finish value exceeds the maximum column width.

Important Information and Disclaimer: The information provided on this page represents TI's knowledge and belief as of the date that it is provided. TI bases its knowledge and belief on information provided by third parties, and makes no representation or warranty as to the accuracy of such information. Efforts are underway to better integrate information from third parties. TI has taken and continues to take reasonable steps to provide representative and accurate information but may not have conducted destructive testing or chemical analysis on incoming materials and chemicals. TI and TI suppliers consider certain information to be proprietary, and thus CAS numbers and other limited information may not be available for release.

In no event shall TI's liability arising out of such information exceed the total purchase price of the TI part(s) at issue in this document sold by TI to Customer on an annual basis.

IMPORTANT NOTICE

Texas Instruments Incorporated and its subsidiaries (TI) reserve the right to make corrections, enhancements, improvements and other changes to its semiconductor products and services per JESD46, latest issue, and to discontinue any product or service per JESD48, latest issue. Buyers should obtain the latest relevant information before placing orders and should verify that such information is current and complete. All semiconductor products (also referred to herein as “components”) are sold subject to TI’s terms and conditions of sale supplied at the time of order acknowledgment.

TI warrants performance of its components to the specifications applicable at the time of sale, in accordance with the warranty in TI’s terms and conditions of sale of semiconductor products. Testing and other quality control techniques are used to the extent TI deems necessary to support this warranty. Except where mandated by applicable law, testing of all parameters of each component is not necessarily performed.

TI assumes no liability for applications assistance or the design of Buyers’ products. Buyers are responsible for their products and applications using TI components. To minimize the risks associated with Buyers’ products and applications, Buyers should provide adequate design and operating safeguards.

TI does not warrant or represent that any license, either express or implied, is granted under any patent right, copyright, mask work right, or other intellectual property right relating to any combination, machine, or process in which TI components or services are used. Information published by TI regarding third-party products or services does not constitute a license to use such products or services or a warranty or endorsement thereof. Use of such information may require a license from a third party under the patents or other intellectual property of the third party, or a license from TI under the patents or other intellectual property of TI.

Reproduction of significant portions of TI information in TI data books or data sheets is permissible only if reproduction is without alteration and is accompanied by all associated warranties, conditions, limitations, and notices. TI is not responsible or liable for such altered documentation. Information of third parties may be subject to additional restrictions.

Resale of TI components or services with statements different from or beyond the parameters stated by TI for that component or service voids all express and any implied warranties for the associated TI component or service and is an unfair and deceptive business practice. TI is not responsible or liable for any such statements.

Buyer acknowledges and agrees that it is solely responsible for compliance with all legal, regulatory and safety-related requirements concerning its products, and any use of TI components in its applications, notwithstanding any applications-related information or support that may be provided by TI. Buyer represents and agrees that it has all the necessary expertise to create and implement safeguards which anticipate dangerous consequences of failures, monitor failures and their consequences, lessen the likelihood of failures that might cause harm and take appropriate remedial actions. Buyer will fully indemnify TI and its representatives against any damages arising out of the use of any TI components in safety-critical applications.

In some cases, TI components may be promoted specifically to facilitate safety-related applications. With such components, TI’s goal is to help enable customers to design and create their own end-product solutions that meet applicable functional safety standards and requirements. Nonetheless, such components are subject to these terms.

No TI components are authorized for use in FDA Class III (or similar life-critical medical equipment) unless authorized officers of the parties have executed a special agreement specifically governing such use.

Only those TI components which TI has specifically designated as military grade or “enhanced plastic” are designed and intended for use in military/aerospace applications or environments. Buyer acknowledges and agrees that any military or aerospace use of TI components which have ***not*** been so designated is solely at the Buyer's risk, and that Buyer is solely responsible for compliance with all legal and regulatory requirements in connection with such use.

TI has specifically designated certain components as meeting ISO/TS16949 requirements, mainly for automotive use. In any case of use of non-designated products, TI will not be responsible for any failure to meet ISO/TS16949.

Products		**Applications**	
Audio	www.ti.com/audio	Automotive and Transportation	www.ti.com/automotive
Amplifiers	amplifier.ti.com	Communications and Telecom	www.ti.com/communications
Data Converters	dataconverter.ti.com	Computers and Peripherals	www.ti.com/computers
DLP® Products	www.dlp.com	Consumer Electronics	www.ti.com/consumer-apps
DSP	dsp.ti.com	Energy and Lighting	www.ti.com/energy
Clocks and Timers	www.ti.com/clocks	Industrial	www.ti.com/industrial
Interface	interface.ti.com	Medical	www.ti.com/medical
Logic	logic.ti.com	Security	www.ti.com/security
Power Mgmt	power.ti.com	Space, Avionics and Defense	www.ti.com/space-avionics-defense
Microcontrollers	microcontroller.ti.com	Video and Imaging	www.ti.com/video
RFID	www.ti-rfid.com		
OMAP Applications Processors	www.ti.com/omap	**TI E2E Community**	e2e.ti.com
Wireless Connectivity	www.ti.com/wirelessconnectivity		

Mailing Address: Texas Instruments, Post Office Box 655303, Dallas, Texas 75265
Copyright © 2014, Texas Instruments Incorporated