PT6520 Series

8-A 5-V/3.3-V Input Adjustable ISR with Short-Circuit protection

SLTS104A

(Revised 1/25/2002)

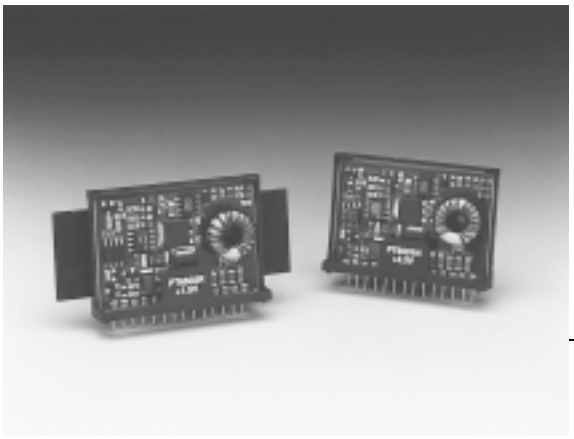

Features

- 8A Rated Output Current
- Single Device: 3.3V/5V Input
- High Efficiency (92% for PT6521)
- Small Footprint (0.75 in², Suffix 'P')
- Output On/Off Standby Control
- Output Short-Circuit Protection
- Adjustable Output Voltage
- Soft Startup
- 16-pin Mount Option (Suffixes L, M, Q, & F)

Description

These power modules are a series of high performance, 8-A rated, Integrated Switching Regulators (ISRs), housed in a low cost 14-Pin SIP (Single In-line Package). Operating from either a 3.3V or 5V standard power bus, the PT6520 series produces a high-output, low-voltage power source for the industry's latest high-speed, microprocessors, ASICs, & DSPs. This allows for the easy integration of these new low-voltage ICs into existing 3.3V or 5V systems without re-designing the power supply.

The PT6520 series features an output On/Off standby pin and output short-circuit protection.

Ordering Information

	PT6521□	= 3.3 Volts
†	**PT6522□**	= 1.5 Volts
†	**PT6523□**	= 2.5 Volts
†	**PT6525□**	= 2.1 Volts
†	**PT6526□**	= 1.8 Volts
†	**PT6527□**	= 1.2 Volts

† 3.3V Input Bus Capable

Note:
Back surface of product is electrically conductive

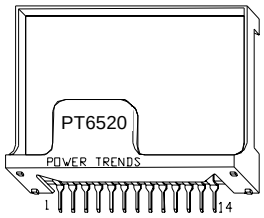

PT Series Suffix (PT1234x)

Case/Pin Configuration	Order Suffix	Package Code *
Vertical	**P**	(EED)
Horizontal	**D**	(EEA)
SMD	**E**	(EEC)
Horizontal, 2-Pin Tab	**M**	(EEM)
SMD, 2-Pin Tab	**L**	(EEL)
Horizontal, 2-Pin Ext Tab	**Q**	(EEQ)
SMD, 2-Pin Ext Tab	**F**	(EEF)
Vertical, Side Tab	**R**	(EEE)
Horizontal, Side Tab	**G**	(EEG)
SMD, Side Tab	**B**	(EEK)

** Previously known as package styles 400/410.*

(Reference the applicable package code drawing for the dimensions and PC board layout)

Pin-Out Information

Pin	Function
1	Remote Sense
2	Do Not Connect
3	STBY*
4	V_{in}
5	V_{in}
6	V_{in}
7	GND
8	GND
9	GND
10	GND
11	V_{out}
12	V_{out}
13	V_{out}
14	V_{out} Adjust

* *For further information, see application notes.*

Standard Application

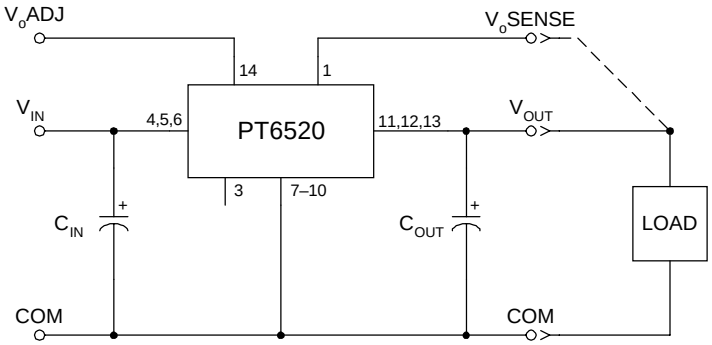

Specifications (Unless otherwise stated, T_a =25°C, V_{in} =5V, C_{in} =330µF, C_{out} =330µF, and I_o =$I_o$max)

Characteristic	Symbol	Conditions		PT6520 SERIES Min	Typ	Max	Units
Output Current	I_o	Over V_{in} range		0.1 (1)	—	8.0	A
Input Voltage Range	V_{in}	Over I_o Range	V_o =3.3V V_o ≤2.5V	4.5 3.1	— —	5.5 5.5	VDC
Set Point Voltage Tolerance	V_o tol			—	±1	±1.5	%V_o
Temperature Variation	Reg_{temp}	–40° ≤T_a ≤ +85°C, I_o =$I_o$min		—	±0.5	—	%V_o
Line Regulation	Reg_{line}	Over V_{in} range		—	±5	±10	mV
Load Regulation	Reg_{load}	Over I_o range		—	±5	±10	mV
Total Output Voltage Variation	ΔV_otot	Includes set-point, line, load, –40° ≤T_a ≤ +85°C		—	±2	±3	%V_o
Efficiency	η	I_o =3.0A	V_o =3.3V V_o =2.5V V_o =2.1V V_o =1.8V V_o =1.5V V_o =1.2V	— — — — — —	92 88 85 82 80 75	— — — — — —	%
		I_o =8.0A	V_o =3.3V V_o =2.5V V_o =2.1V V_o =1.8V V_o =1.5V V_o =1.2V	— — — — — —	89 85 82 78 75 71	— — — — — —	%
V_o Ripple (pk-pk)	V_r	20MHz bandwidth		—	35	—	mV_{pp}
Transient Response	t_{tr}	1A/µs load step, 50% to 100% $I_o$max		—	50	—	µs
	ΔV_{tr}	V_o over/undershoot		—	±70	—	mV
Short Circuit Threshold	I_{sc} threshold			—	12	22.5	A
Switching Frequency	f_s	Over V_{in} and I_o range		300	350	400	kHz
Remote On/Off (Pin 1) Input High Voltage Input Low Voltage Input Low Current	 V_{IH} V_{IL} I_{IL}	Referenced to –V_{in} (pin 7)		 — –0.1 —	 — — –0.5	 Open (2) +0.4 –	 V mA
Standby Input Current	I_{in} standby	pins 3 & 7 connected		—	15	25	mA
External Output Capacitance	C_{out}	See application schematic		330	—	5,000	µF
External Input Capacitance	C_{in}	See application schematic		330	—	—	µF
Operating Temperature Range	T_a	Over V_{in} range		-40	—	+85 (3)	°C
Storage Temperature	T_s	—		-40	—	+125	°C
Reliability	MTBF	Per Bellcore TR-332 50% stress, T_a =40°C, ground benign		6.3	—	—	10^6 Hrs
Mechanical Shock	—	Per Mil-Std-883D, method 2002.3, 1ms, half-sine, mounted to a fixture		—	500	—	G's
Mechanical Vibration Mil-Std-883D, 20-2000Hz	—	Suffixes P, D, & E Suffixes L & M		— —	7.5 TBD (4)	— —	G's
Weight	—	Suffixes P, D, & E Suffixes R, G & B Suffixes L & M Suffixes Q & F		— — — —	12.5 16.5 15.25 22	— — — —	grams
Flammability	—	Materials meet UL 94V-0					

Notes: *(1) The ISR will operate at no load with reduced specifications.*
(2) The STBY control (pin 3) has an internal pull-up and if it is left open circuit the module will operate when input power is applied. The open-circuit voltage is typically 12.6V, and maybe as high as 15V. Refer to the application notes for other interface considerations.*
(3) See Safe Operating Area curves or contact the factory for the appropriate derating.
(4) The tab pins on the 16-pin mount package types (suffixes L & M) must be soldered. For more information see the applicable package outline drawing.

Input/Output Capacitors: *The PT6520 series requires a 330µF capacitor at both the input and output for proper operation in all applications. In addition, the input capacitance (C_{in}) must be rated for a minimum of 1.2Arms ripple current rating. For transient or dynamic load applications, additional output capacitance (C_{out}) may be necessary. The maximum allowable output capacitance is 5,000µF. For more information consult the related application note on capacitor recommendations.*

Typical Characteristics

Characteristic Data; V_{in} =5.0V *(See Note A)*

Efficiency vs Output Current

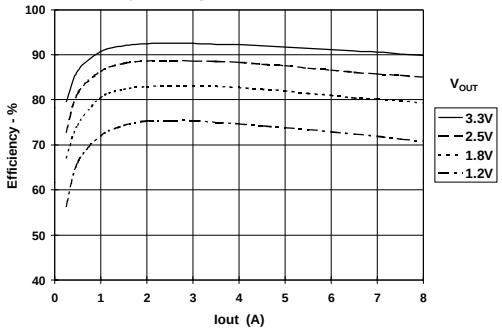

Output Ripple vs Output Current

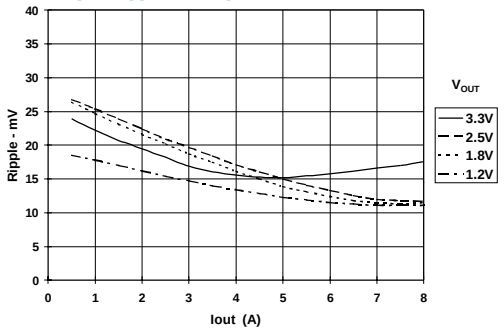

Power Dissipation vs Output Current

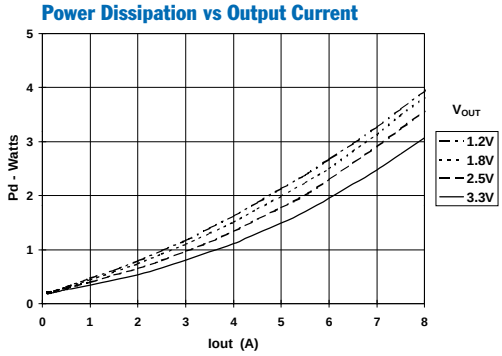

Safe Operating Area; V_{in} =5V *(See Note B)*

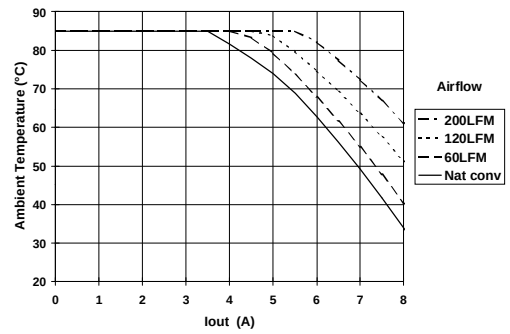

Characteristic Data; V_{in} =3.3V *(See Note A)*

Efficiency vs Output Current

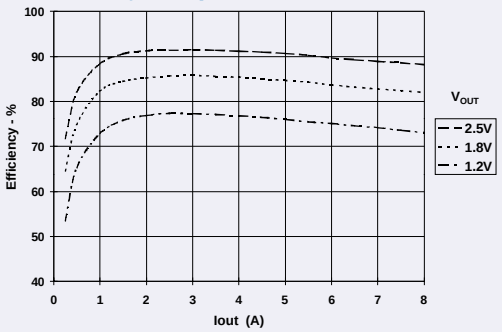

Output Ripple vs Output Current

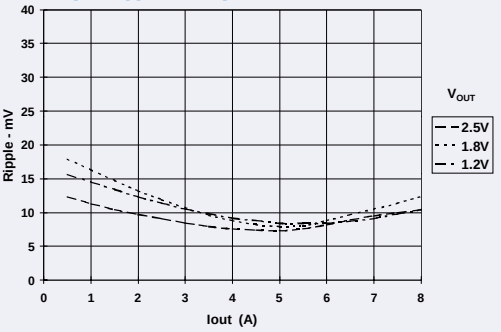

Power Dissipation Output Current

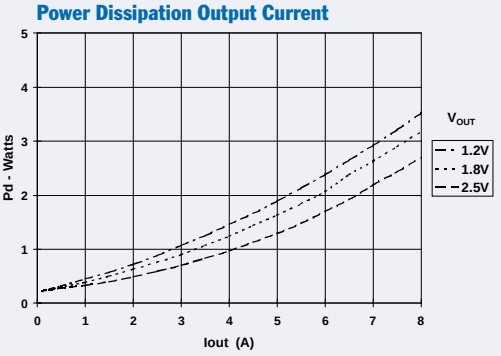

Safe Operating Area; 3.3V *(See Note B)*

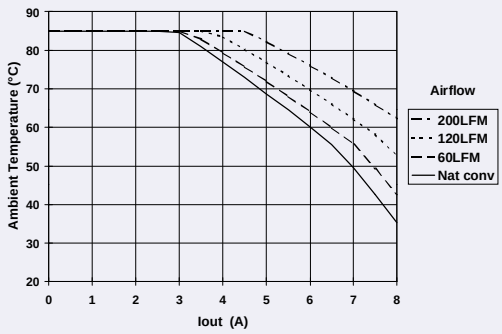

Note A: *Characteristic data has been developed from actual products tested at 25°C. This data is considered typical data for the Converter.*
Note B: *SOA curves represent the conditions at which internal components are at or below the manufacturer's maximum operating temperatures*

Using the Standby Function of the PT6520 Series of Integrated Switching Regulators

The PT6520 series of power modules are high efficiency regulators that operate off either a 3.3V or 5V input bus voltage. These regulators incorporate a *Standby* function, which may be used in applications that require power-up/shutdown sequencing, and wherever there is a requirement for the output status of the module to be controlled by external circuitry.

The standby function is provided by the *STBY** control, pin 3. If pin 3 is left open-circuit [1] the regulator operates normally, and provides a regulated output when a valid supply voltage is applied to V_{in} (pins 4–6) with respect to GND (pins 7–10). If a low voltage [2] is then applied to pin 3 the regulator output will be disabled and the input current drawn by the ISR will be reduced to about 15mA [3]. The standby control may also be used to hold-off the regulator output during the period that input power is applied.

Pin 3 is ideally controlled with an open-collector (or open-drain) discrete transistor (See Figure 1). The open-circuit voltage is typcially 12.6V. Table 1 gives the circuit parameters for this control input.

Table 1 Standby Control Requirements [2, 3]

Parameter	Min	Typ	Max
Input Low (V_{IL})	–0.1V		+0.4V
I_{stby} (pin 3 =ground)		–0.5mA	
V_{stby} (open circuit)		12.6V	15V

Notes:

1 The standby control input requires no external pull-up resistor. The open-circuit voltage of the STBY* pin is typically 12.6V.

2. The standby control input is *Not* compatible with TTL or other devices that incorporate a totem-pole output drive. Use only a true open-collector device, preferably a discrete bipolar transistor (or MOSFET). To ensure the regulator output is disabled, the control pin must be pulled to less than 0.4Vdc with a low-level 0.5mA sink to ground.

3. When the regulator output is disabled the current drawn from the input source is typically reduced to 15mA.

Figure 1

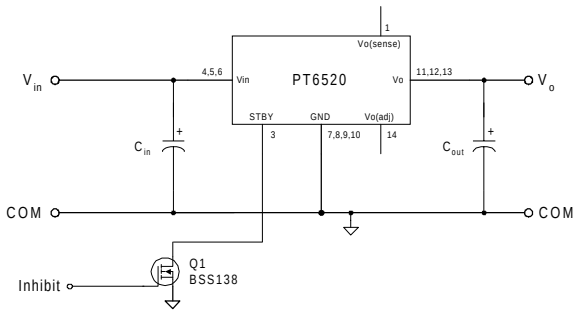

Turn-On Time: In the circuit of Figure 1, turning Q_1 on applies a low voltage to the STBY control (pin 3) and disables the regulator ouput. Correspondingly, turning Q_1 off removes the low-voltage signal and enables the output. Once enabled, the output will typically experience a 10–15ms delay followed by a predictable ramp-up of voltage. The regulator should provide a fully regulated output voltage within 40ms. The waveform of Figure 2 shows the output voltage and input current waveforms of a PT6521 (3.3V) following the turn-off of Q_1. The turn off of Q_1 corresponds to the rise in Vstby. The waveforms were measured with a 5Vdc input voltage, and 4.5A resistive load.

Figure 2

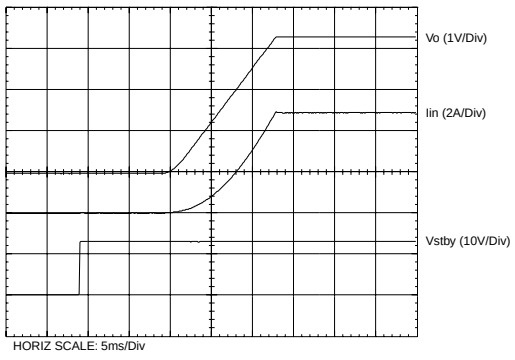

Adjusting the Output Voltage of the PT6520 Series of Integrated Switching Regulators

The output voltage of the PT6520 series of integrated switching regulators (ISRs) may be adjusted higher or lower than the factory trimmed pre-set voltage with the addition of a single external resistor. [1] Table 1 gives the allowable adjustment range for each model in the series as V_a (min) and V_a (max).

Adjust Up: An increase in the output voltage is obtained by adding a resistor R_2, between pin 14 (V_o adjust) and pins 7-10 (GND).

Adjust Down: Add a resistor (R_1), between pin 14 (V_o adjust) and pin 1 V_o(sense) [3].

Refer to Figure 1 and Table 2 for both the placement and value of the required resistor, either (R_1) or R_2 as appropriate.

The values of (R1) [adjust down], and R2 [adjust up], can also be calculated using the following formulas.

$$(R_1) = \frac{R_o\,(V_a - V_r)}{V_o - V_a} - R_s \quad k\Omega$$

$$R_2 = \frac{R_o \cdot V_r}{V_a - V_o} - R_s \quad k\Omega$$

Where: V_o = Original output voltage
V_a = Adjusted output voltage
V_r = The reference voltage (Table 1)
R_o = The multiplier resistance (Table 1)
R_s = The internal series resistance (Table 1)

Table 1

ADJUSTMENT AND FORMULA PARAMETERS

Series Pt #	PT6527	PT6522	PT6526	PT6525	PT6523	PT6521
V_o (nom)	1.2	1.5	1.8	2.1	2.5	3.3
V_a (min)	1.09	1.47	1.75	1.95	2.25	2.75
V_a (max)	1.52	1.73	2.05	2.45	2.85	3.75
V_r (V)	0.8	1.27	1.27	1.27	1.27	1.27
R_o (kΩ)	10.0	10.2	10.0	10.0	10.0	10.0
R_s (kΩ)	24.9	49.9	49.9	33.2	33.2	24.9

Figure 1

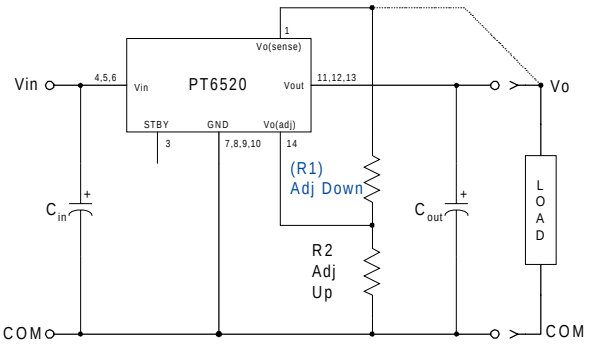

Notes:

1. Use only a single 1% resistor in either the (R_1) or R_2 location. Place the resistor as close to the ISR as possible.
2. Never connect capacitors from V_o adjust to either GND, V_{out}, or the Remote Sense pin. Capacitance added to the V_o adjust pin will affect the stability of the ISR.
3. If the Remote Sense feature is not being used, the resistor (R_1) may be connected between pin 14 (V_o adjust) and pins 11–13 (V_{out}).
4. Adjusting the output voltage of the PT6523 (2.5V model) higher than the factory pre-trimmed output voltage may increase the minimum input voltage specified for the part. This model must comply with the following requirements.

PT6523:

V_{in}(min) = (V_a + 0.5)V or 3.1V, whichever is greater.

Table 2

PT6520 ADJUSTMENT RESISTOR VALUES

Series Pt #	PT6527	PT6522	PT6526	PT6525	PT6523	Series Pt #	PT6521
V_o (nom)	1.2V	1.5V	1.8V	2.1V	2.5V	V_o (nom)	3.3V
V_a (req'd)						V_a (req'd)	
1.1	(5.1)kΩ					2.75	(2.0)kΩ
1.15	(45.1)kΩ					2.8	(5.7)kΩ
1.2						2.85	(10.2)kΩ
1.25	135.0kΩ					2.9	(15.9)kΩ
1.3	55.1kΩ					2.95	(23.1)kΩ
1.35	28.4kΩ					3.0	(32.8)kΩ
1.4	15.1kΩ					3.05	(46.3)kΩ
1.45	7.1kΩ					3.1	(66.6)kΩ
1.47	4.7kΩ	(18.1)kΩ				3.15	(100.0)kΩ
1.5	1.8kΩ					3.2	(168.0)kΩ
1.55		209.0kΩ				3.25	(371.0)kΩ
1.6		79.6kΩ				3.3	
1.65		36.5kΩ				3.35	229.0kΩ
1.7		14.9kΩ				3.4	102.0kΩ
1.75			(46.1)kΩ			3.45	59.8kΩ
1.8						3.5	38.6kΩ
1.85			204.0kΩ			3.55	25.9kΩ
1.9			77.1kΩ			3.6	17.4kΩ
1.95			34.8kΩ	(12.1)kΩ		3.65	11.4kΩ
2.0			13.6kΩ	(39.8)kΩ		3.7	6.9kΩ
2.05				(123.0)kΩ		3.75	3.3kΩ
2.1							
2.15				221.kΩ			
2.2				93.8kΩ			
2.25				51.5kΩ	(6.0)kΩ		
2.3				30.3kΩ	(18.3)kΩ		
2.35				17.6kΩ	(38.8)kΩ		
2.4				9.1kΩ	(79.8)kΩ		
2.45				3.1kΩ	(203.0)kΩ		
2.5							
2.55					221.0kΩ		
2.6					93.8kΩ		
2.65				(See Note 4)	51.5kΩ		
2.7					30.3kΩ		
2.75					17.6kΩ		
2.8					9.1kΩ		
2.85					3.1kΩ		

R1 = (Blue) R2 = Black

Capacitor Recommendations for the PT6520 Series of Integrated Switching Regulators

Input Capacitors:

The recommended input capacitance is determined by 1.0 ampere minimum ripple current rating and 330µF minimum capacitance (300µF for Oscon® or low ESR tantalum). Ripple current and <100mΩ equivalent series resistance (ESR) values are the major considerations, along with temperature, when designing with different types of capacitors. Tantalum capacitors have a recommended minimum voltage rating of 2× the maximum DC voltage + AC ripple. This is necessary to insure reliability for input voltage bus applications

Output Capacitors:

The ESR of the required capacitor (C_{out}) must not be greater than 150mΩ. Electrolytic capacitors have poor ripple performance at frequencies greater than 400kHz but excellent low frequency transient response. Above the ripple frequency, ceramic capacitors are necessary to improve the transient response and reduce any high frequency noise components apparent during higher current excursions. Preferred low ESR type capacitor part numbers are identified in Table 1.

Tantalum Capacitors

Tantalum type capacitors may be used for the output but only the AVX TPS series, Sprague 593D/594/595 series or Kemet T495/T510 series. These capacitors are recommended over many other tantalum types due to their higher rated surge, power dissipation, and ripple current capability. As a caution the TAJ series by AVX is not recommended. This series has considerably higher ESR, reduced power dissipation, and lower ripple current capability. The TAJ series is less reliable than the AVX TPS series when determining power dissipation capability. Tantalum or Oscon® types are recommended for applications where ambient temperatures fall below 0°C.

Capacitor Table

Table 1 identifies the characteristics of capacitors from a number of vendors with acceptable ESR and ripple current (rms) ratings. The number of capacitors required at both the input and output buses is identified for each capacitor type.

This is not an extensive capacitor list. Capacitors from other vendors are available with comparable specifications. Those listed are for guidance. The RMS ripple current rating and ESR (Equivalent Series Resistance at 100kHz) are critical parameters necessary to insure both optimum regulator performance and long capacitor life.

Table 1: Input/Output Capacitors

Capacitor Vendor/ Component Series	Capacitor Characteristics					Quantity		
	Working Voltage	Value(µF)	(ESR) Equivalent Series Resistance	85°C Maximum Ripple Current(Irms)	Physical Size(mm)	Input Bus	Output Bus	Vendor Number
Panasonic FC	25V 35V 35V	560µF 390µF 330µF	0.0065Ω 0.065Ω 0.117Ω	1205mA 1205mA 555mA	12.5x15 12.5x15 8x11.5	1 2 N/R	1 1 1	EEUFC1E561S EEUFC1V391S EEUFC1C331
United Chemi-Con LXV/FS/ LXZ	16V 35V 10V 20V	330µF 470µF 330µF 150µF	0.120Ω 0.052Ω 0.025Ω 0.030÷2 Ω	555mA 1220mA 3500mA 3200mA	8x12 10x20 10x10.5 10x10.5	N/R 1 1 2	1 1 1 2	LXZ16VB331M8X12LL LXZ35VB471M10X20LL 10FS330M 20FS150M
Nichicon PL/ PM	35V 35V 50V	560µF 330µF 470µF	0.048Ω 0.065÷2 Ω 0.046Ω	1360mA 1020mA 1470mA	16x15 12.5x15 18x15	1 1 1	1 1 1	UPL1V561MHH6 UPL1V331MHH6 UPM1H4711MHH6
Panasonic FC (Surface Mtg)	10V 35V 16V	1000µF 330µF 330µF	0.043Ω 0.065Ω 0.150Ω	1205mA 1205mA 670mA	12x16.5 12.5x16 10x10.2	1 1 N/R	1 1 1	EEVFC1A102LQ EEVFC1V331LQ EEVFC1C331P
Oscon- SS SV	10V 10V 20V	330µF 330µF 150µF	0.025Ω 0.025Ω 0.024÷2 Ω	>3500mA >3800mA 3600mA	10.0x10.5 10.3x10.3 10.3x10.3	1 1 2	1 1 2	10SS330M 10SV300M 20SV150M SV= Surface Mount
AVX Tantalum TPS	10V 10V 10V	330µF 330µF 220µF	0.100÷2 Ω 0.100÷2 Ω 0.095Ω	>2500mA >3000mA >2000mA	7.3Lx 4.3Wx 4.1H	2 2 2	1 1 2	TPSV337M010R0100 TPSV337M010R0060 TPSV227M0105R0100
Kemet T510/ T495	10V 10V	330µF 220µF	0.033Ω 0.07Ω÷2 =0.035Ω	1400mA >2000mA	7.3Lx5.7W x 4.0H	2 2	1 2	T510X337M010AS T495X227M010AS
Sprague 594D	10V 10V	330µF 220µF	0.045Ω 0.065Ω	2350mA >2000mA	7.3Lx 6.0Wx 4.1H	2 2	1 2	4D337X0010R2T 594D227X0010D2T

N/R –Not recommended. The ripple current rating and ESR does not meet the requirements.

PACKAGING INFORMATION

Orderable Device	Status (1)	Package Type	Package Drawing	Pins	Package Qty	Eco Plan (2)	Lead/Ball Finish	MSL Peak Temp (3)
PT6521B	NRND	SIP MOD ULE	EEK	14	12	TBD	Call TI	Level-1-215C-UNLIM
PT6521D	NRND	SIP MOD ULE	EEA	14	12	TBD	Call TI	Level-1-215C-UNLIM
PT6521E	NRND	SIP MOD ULE	EEC	14	12	TBD	Call TI	Level-1-215C-UNLIM
PT6521ET	NRND	SIP MOD ULE	EEL	14	100	TBD	Call TI	Level-1-235C-UNLIM
PT6521F	NRND	SIP MOD ULE	EEF	14		TBD	Call TI	Call TI
PT6521G	NRND	SIP MOD ULE	EEG	14	12	TBD	Call TI	Level-1-215C-UNLIM
PT6521L	NRND	SIP MOD ULE	EEL	14	12	TBD	Call TI	Level-1-215C-UNLIM
PT6521LT	NRND	SIP MOD ULE	EEL	14	100	TBD	Call TI	Level-1-235C-UNLIM
PT6521M	NRND	SIP MOD ULE	EEM	14	12	TBD	Call TI	Level-1-215C-UNLIM
PT6521P	NRND	SIP MOD ULE	EED	14	12	TBD	Call TI	Level-1-215C-UNLIM
PT6521Q	NRND	SIP MOD ULE	EEQ	14		TBD	Call TI	Call TI
PT6521R	NRND	SIP MOD ULE	EEE	14	12	TBD	Call TI	Level-1-215C-UNLIM
PT6522B	NRND	SIP MOD ULE	EEK	14	12	TBD	Call TI	Level-1-215C-UNLIM
PT6522D	NRND	SIP MOD ULE	EEA	14	12	TBD	Call TI	Level-1-215C-UNLIM
PT6522E	NRND	SIP MOD ULE	EEC	14	12	TBD	Call TI	Level-1-215C-UNLIM
PT6522ET	NRND	SIP MOD ULE	EEL	14		TBD	Call TI	Call TI
PT6522F	NRND	SIP MOD ULE	EEF	14		TBD	Call TI	Call TI
PT6522G	NRND	SIP MOD ULE	EEG	14	12	TBD	Call TI	Level-1-215C-UNLIM
PT6522L	NRND	SIP MOD ULE	EEL	14	12	TBD	Call TI	Level-1-215C-UNLIM
PT6522LT	NRND	SIP MOD ULE	EEL	14	100	TBD	Call TI	Call TI
PT6522M	NRND	SIP MOD ULE	EEM	14		TBD	Call TI	Call TI
PT6522P	NRND	SIP MOD ULE	EED	14	12	TBD	Call TI	Level-1-215C-UNLIM
PT6522Q	NRND	SIP MOD ULE	EEQ	14		TBD	Call TI	Call TI
PT6522R	NRND	SIP MOD ULE	EEE	14	12	TBD	Call TI	Level-1-215C-UNLIM
PT6523B	NRND	SIP MOD ULE	EEK	14		TBD	Call TI	Call TI

Orderable Device	Status (1)	Package Type	Package Drawing	Pins	Package Qty	Eco Plan (2)	Lead/Ball Finish	MSL Peak Temp (3)
PT6523D	NRND	SIP MOD ULE	EEA	14	12	TBD	Call TI	Level-1-215C-UNLIM
PT6523E	NRND	SIP MOD ULE	EEC	14	12	TBD	Call TI	Level-1-215C-UNLIM
PT6523ET	NRND	SIP MOD ULE	EEL	14	100	TBD	Call TI	Level-1-215C-UNLIM
PT6523F	NRND	SIP MOD ULE	EEF	14		TBD	Call TI	Call TI
PT6523G	NRND	SIP MOD ULE	EEG	14		TBD	Call TI	Call TI
PT6523L	NRND	SIP MOD ULE	EEL	14		TBD	Call TI	Call TI
PT6523LT	NRND	SIP MOD ULE	EEL	14	100	TBD	Call TI	Level-1-215C-UNLIM
PT6523M	NRND	SIP MOD ULE	EEM	14		TBD	Call TI	Call TI
PT6523P	NRND	SIP MOD ULE	EED	14	12	TBD	Call TI	Level-1-215C-UNLIM
PT6523Q	NRND	SIP MOD ULE	EEQ	14		TBD	Call TI	Call TI
PT6523R	NRND	SIP MOD ULE	EEE	14		TBD	Call TI	Call TI
PT6525B	NRND	SIP MOD ULE	EEK	14		TBD	Call TI	Call TI
PT6525D	NRND	SIP MOD ULE	EEA	14	12	TBD	Call TI	Level-1-215C-UNLIM
PT6525E	NRND	SIP MOD ULE	EEC	14		TBD	Call TI	Call TI
PT6525F	NRND	SIP MOD ULE	EEF	14		TBD	Call TI	Call TI
PT6525G	NRND	SIP MOD ULE	EEG	14		TBD	Call TI	Call TI
PT6525L	NRND	SIP MOD ULE	EEL	14		TBD	Call TI	Call TI
PT6525M	NRND	SIP MOD ULE	EEM	14		TBD	Call TI	Call TI
PT6525P	NRND	SIP MOD ULE	EED	14		TBD	Call TI	Call TI
PT6525Q	NRND	SIP MOD ULE	EEQ	14		TBD	Call TI	Call TI
PT6525R	NRND	SIP MOD ULE	EEE	14		TBD	Call TI	Call TI
PT6526B	NRND	SIP MOD ULE	EEK	14	12	TBD	Call TI	Level-1-215C-UNLIM
PT6526D	NRND	SIP MOD ULE	EEA	14	12	TBD	Call TI	Level-1-215C-UNLIM
PT6526E	NRND	SIP MOD ULE	EEC	14	12	TBD	Call TI	Level-1-215C-UNLIM
PT6526ET	NRND	SIP MOD ULE	EEL	14	100	TBD	Call TI	Level-1-215C-UNLIM
PT6526F	NRND	SIP MOD ULE	EEF	14	12	TBD	Call TI	Level-1-215C-UNLIM

Orderable Device	Status [1]	Package Type	Package Drawing	Pins	Package Qty	Eco Plan [2]	Lead/Ball Finish	MSL Peak Temp [3]
PT6526G	NRND	SIP MOD ULE	EEG	14	12	TBD	Call TI	Level-1-215C-UNLIM
PT6526L	NRND	SIP MOD ULE	EEL	14	12	TBD	Call TI	Level-1-215C-UNLIM
PT6526LT	NRND	SIP MOD ULE	EEL	14	100	TBD	Call TI	Level-1-215C-UNLIM
PT6526M	NRND	SIP MOD ULE	EEM	14		TBD	Call TI	Call TI
PT6526P	NRND	SIP MOD ULE	EED	14	12	TBD	Call TI	Level-1-215C-UNLIM
PT6526Q	NRND	SIP MOD ULE	EEQ	14		TBD	Call TI	Call TI
PT6526R	NRND	SIP MOD ULE	EEE	14	12	TBD	Call TI	Level-1-215C-UNLIM
PT6527B	NRND	SIP MOD ULE	EEK	14	12	TBD	Call TI	Level-1-215C-UNLIM
PT6527D	NRND	SIP MOD ULE	EEA	14		TBD	Call TI	Call TI
PT6527E	NRND	SIP MOD ULE	EEC	14	12	TBD	Call TI	Level-1-215C-UNLIM
PT6527F	NRND	SIP MOD ULE	EEF	14	12	TBD	Call TI	Level-1-215C-UNLIM
PT6527G	NRND	SIP MOD ULE	EEG	14	12	TBD	Call TI	Level-1-215C-UNLIM
PT6527L	NRND	SIP MOD ULE	EEL	14		TBD	Call TI	Call TI
PT6527M	NRND	SIP MOD ULE	EEM	14		TBD	Call TI	Call TI
PT6527P	NRND	SIP MOD ULE	EED	14	12	TBD	Call TI	Level-1-215C-UNLIM
PT6527Q	NRND	SIP MOD ULE	EEQ	14		TBD	Call TI	Call TI
PT6527R	NRND	SIP MOD ULE	EEE	14		TBD	Call TI	Call TI

[1] The marketing status values are defined as follows:
ACTIVE: Product device recommended for new designs.
LIFEBUY: TI has announced that the device will be discontinued, and a lifetime-buy period is in effect.
NRND: Not recommended for new designs. Device is in production to support existing customers, but TI does not recommend using this part in a new design.
PREVIEW: Device has been announced but is not in production. Samples may or may not be available.
OBSOLETE: TI has discontinued the production of the device.

[2] Eco Plan - The planned eco-friendly classification: Pb-Free (RoHS) or Green (RoHS & no Sb/Br) - please check http://www.ti.com/productcontent for the latest availability information and additional product content details.
TBD: The Pb-Free/Green conversion plan has not been defined.
Pb-Free (RoHS): TI's terms "Lead-Free" or "Pb-Free" mean semiconductor products that are compatible with the current RoHS requirements for all 6 substances, including the requirement that lead not exceed 0.1% by weight in homogeneous materials. Where designed to be soldered at high temperatures, TI Pb-Free products are suitable for use in specified lead-free processes.
Green (RoHS & no Sb/Br): TI defines "Green" to mean Pb-Free (RoHS compatible), and free of Bromine (Br) and Antimony (Sb) based flame retardants (Br or Sb do not exceed 0.1% by weight in homogeneous material)

[3] MSL, Peak Temp. -- The Moisture Sensitivity Level rating according to the JEDEC industry standard classifications, and peak solder temperature.

Important Information and Disclaimer: The information provided on this page represents TI's knowledge and belief as of the date that it is provided. TI bases its knowledge and belief on information provided by third parties, and makes no representation or warranty as to the accuracy of such information. Efforts are underway to better integrate information from third parties. TI has taken and continues to take reasonable steps to provide representative and accurate information but may not have conducted destructive testing or chemical analysis on incoming materials and chemicals. TI and TI suppliers consider certain information to be proprietary, and thus CAS numbers and other limited information may not be available for release.

In no event shall TI's liability arising out of such information exceed the total purchase price of the TI part(s) at issue in this document sold by TI to Customer on an annual basis.

IMPORTANT NOTICE

Texas Instruments Incorporated and its subsidiaries (TI) reserve the right to make corrections, modifications, enhancements, improvements, and other changes to its products and services at any time and to discontinue any product or service without notice. Customers should obtain the latest relevant information before placing orders and should verify that such information is current and complete. All products are sold subject to TI's terms and conditions of sale supplied at the time of order acknowledgment.

TI warrants performance of its hardware products to the specifications applicable at the time of sale in accordance with TI's standard warranty. Testing and other quality control techniques are used to the extent TI deems necessary to support this warranty. Except where mandated by government requirements, testing of all parameters of each product is not necessarily performed.

TI assumes no liability for applications assistance or customer product design. Customers are responsible for their products and applications using TI components. To minimize the risks associated with customer products and applications, customers should provide adequate design and operating safeguards.

TI does not warrant or represent that any license, either express or implied, is granted under any TI patent right, copyright, mask work right, or other TI intellectual property right relating to any combination, machine, or process in which TI products or services are used. Information published by TI regarding third-party products or services does not constitute a license from TI to use such products or services or a warranty or endorsement thereof. Use of such information may require a license from a third party under the patents or other intellectual property of the third party, or a license from TI under the patents or other intellectual property of TI.

Reproduction of information in TI data books or data sheets is permissible only if reproduction is without alteration and is accompanied by all associated warranties, conditions, limitations, and notices. Reproduction of this information with alteration is an unfair and deceptive business practice. TI is not responsible or liable for such altered documentation.

Resale of TI products or services with statements different from or beyond the parameters stated by TI for that product or service voids all express and any implied warranties for the associated TI product or service and is an unfair and deceptive business practice. TI is not responsible or liable for any such statements.

Following are URLs where you can obtain information on other Texas Instruments products and application solutions:

Products		**Applications**	
Amplifiers	amplifier.ti.com	Audio	www.ti.com/audio
Data Converters	dataconverter.ti.com	Automotive	www.ti.com/automotive
DSP	dsp.ti.com	Broadband	www.ti.com/broadband
Interface	interface.ti.com	Digital Control	www.ti.com/digitalcontrol
Logic	logic.ti.com	Military	www.ti.com/military
Power Mgmt	power.ti.com	Optical Networking	www.ti.com/opticalnetwork
Microcontrollers	microcontroller.ti.com	Security	www.ti.com/security
		Telephony	www.ti.com/telephony
		Video & Imaging	www.ti.com/video
		Wireless	www.ti.com/wireless

Mailing Address: Texas Instruments
Post Office Box 655303 Dallas, Texas 75265

Copyright © 2005, Texas Instruments Incorporated