DESCRIPTION

The PT5622 is an electronic ballast controller IC intended for dimming product with ordinary switch. The features of the controller IC include negative-feedback closed-loop control of the lamp current, programmable preheat time and preheat frequency, low start-up current, precise oscillating frequency and easy applications. PT5622 is available in both DIP16/SOP16 packages.

APPLICATION

- Adjustable to various types of fluorescent lamps/CFLs

FEATURES

- Electronic ballast IC with dimming function using ordinary switches
- Integrated MCU
- Negative-feedback control of the lamp current, supporting low luminance ignition
- 2/3-level selection available for low to high or high to low luminance dimming mode
- Programmable preheat time
- Programmable preheat frequency, sweeping frequency ignition
- Programmable delay time from switch-off to reset state
- Programmable delay time from switch-on to preheat mode
- Fixed dead time
- Supporting DIP16/SOP16 packages

BLOCK DIAGRAM

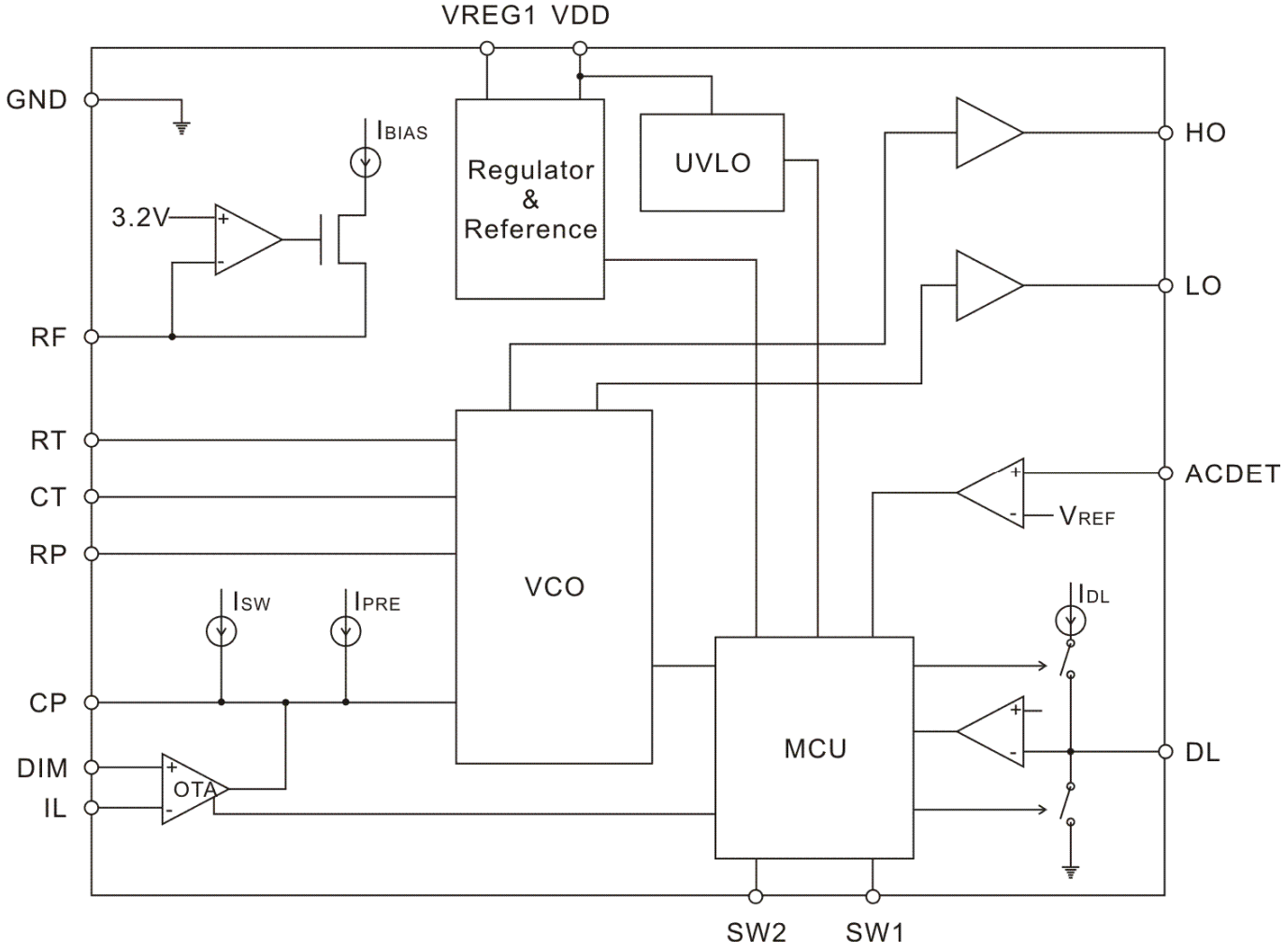

APPLICATION CIRCUIT

AC: 120V, OUTPUT POWER 15W/7W/3W

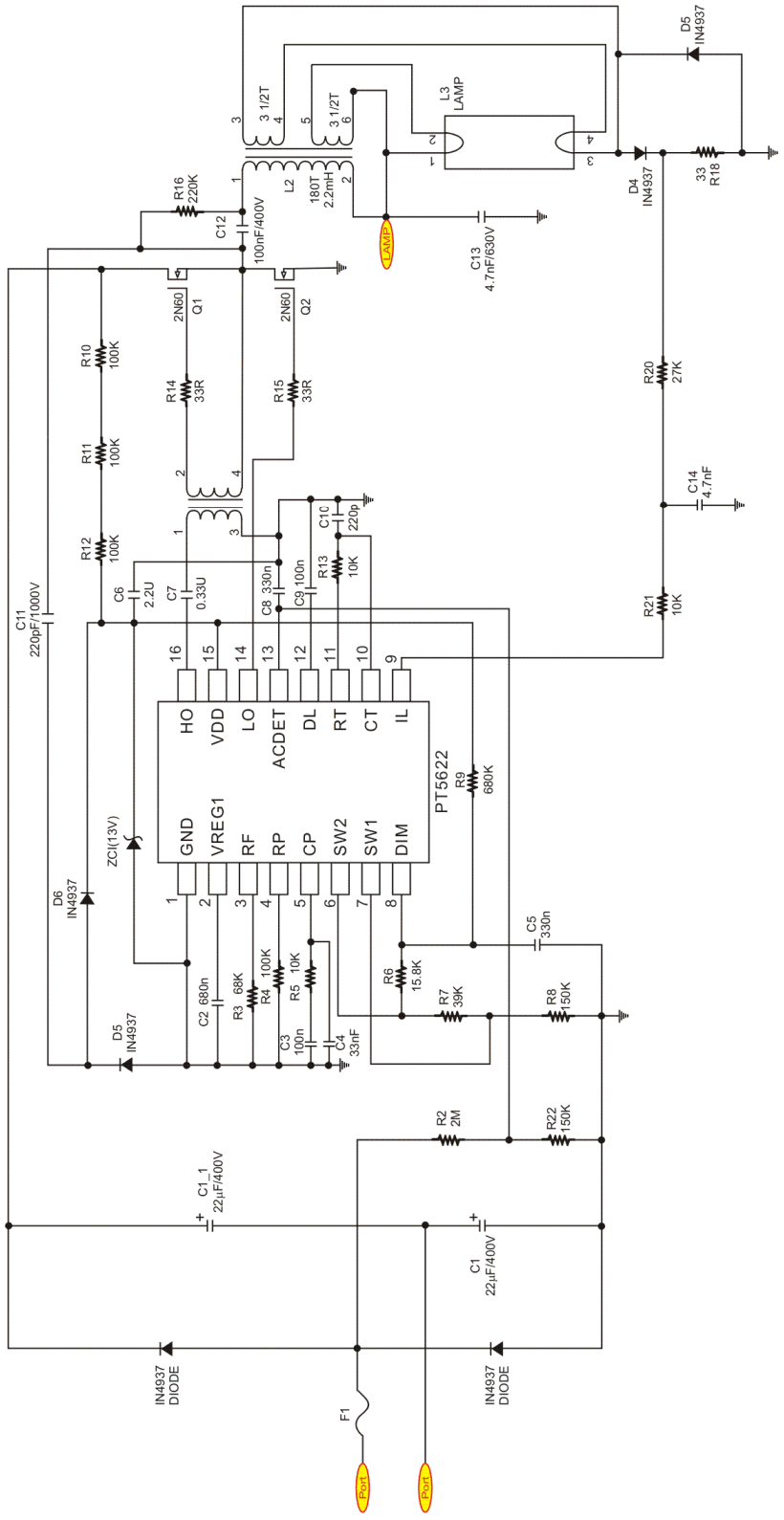

ORDER INFORMATION

Valid Part Number	Package Type	Top Code
PT5622-D-001	16 Pins, DIP, 300mil	PT5622-D-001
PT5622-D-002	16 Pins, DIP, 300mil	PT5622-D-002
PT5622-D-003	16 Pins, DIP, 300mil	PT5622-D-003
PT5622-D-004	16 Pins, DIP, 300mil	PT5622-D-004
PT5622-S-001	16 Pins, SOP, 150mil	PT5622-S-001
PT5622-S-002	16 Pins, SOP, 150mil	PT5622-S-002
PT5622-S-003	16 Pins, SOP, 150mil	PT5622-S-003
PT5622-S-004	16 Pins, SOP, 150mil	PT5622-S-004

PIN CONFIGURATION

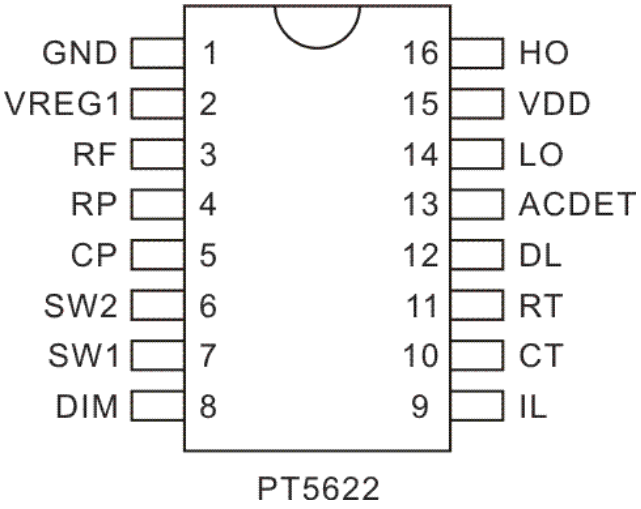

PIN CONFIGURATION

Pin Name	Description	Pin No.
GND	Ground	1
VREG1	Standby power supply for internal MCU when the AC power supply is switched off	2
RF	Internal reference current bias setting pin, its voltage is fixed at 3.2V. An external resistor is connected from this pin to GND to determine the internal reference current, typical value is 68K	3
RP	Preheat frequency setting pin, its output current is 29μA. An external resistor is connected to this pin and introduce a voltage for VCO	4
CP	Preheat time and sweeping frequency ignition setting pin	5
SW2, SW1	3-level dimming setting pin, different states of SW2 and SW1 leads to change output voltage of external resistive divider, and this voltage is introduced to the input of the dimming pin DIM.	6, 7
DIM	Dimming input pin. Accept the output voltage of external resistive divider	8
IL	Lamp current sampling pin	9
CT	An external capacitor is connected to this pin to determine oscillating frequency	10
RT	An external resistor is connected to this pin to determine oscillating frequency	11
DL	Switch delay time setting pin. A capacitor is connected to this pin. When an AC input is detected by ACDET pin, 0.6μA current is charged to the capacitor. If the AC input is not switched-off before the capacitor reaching 3.8V, the system enters preheat mode	12
ACDET	AC input detection pin, used for detecting the switch state and on-off times of AC input	13
LO	Low-side gate driver output	14
VDD	Power supply, operating voltage is 13V	15
HO	High-side gate driver output	16

IMPORTANT NOTICE

Princeton Technology Corporation (PTC) reserves the right to make corrections, modifications, enhancements, improvements, and other changes to its products and to discontinue any product without notice at any time.
PTC cannot assume responsibility for use of any circuitry other than circuitry entirely embodied in a PTC product. No circuit patent licenses are implied.

Princeton Technology Corp.
2F, 233-1, Baociao Road,
Sindian, Taipei 23145, Taiwan
Tel: 886-2-66296288
Fax: 886-2-29174598
http://www.princeton.com.tw