Princeton Technology Corp.
Tel : 886-2-29162151
Fax: 886-2-29174598
URL: *http://www.princeton.com.tw*

5-Mode Preset Equalizer IC **PT2388**

DESCRIPTION

PT2388 is a 2-channel digital preset equalizer utilizing CMOS Technology. It provides 5 different sound selections, namely: Flat/Normal, Rock, Pops, Classic and Jazz. A Bass Booster may be added to any of 5 sound selections, thereby creating more audio versatility. PT2388 provides two types of key selection mode, namely: the Direct and the Cyclic. Pin assignment and application circuit are optimized for cost saving advantages and easy PCB layout.

FEATURES

- CMOS Technology
- Low Total Harmonic Distortion and High S/N Ratio: THD + N < 0.02%, S/N > 95 dB
- LED Display Output Mode
- Least External Components
- 5 Sound Selections Provided: Flat/Normal, Classic, Rock, Pops, and Jazz
- Bass Booster Function
- 2-Channel Output
- Wide Operating Voltage Range: 5 ~9 V
- Direct or Cyclic Key Selection is Provided
- Available in DIP or SO Package

APPLICATIONS

- Walkman
- Car Audio
- Fader
- Multimedia Audio Components
- MPEG Card

Tel : 886-2-29162151
Fax: 886-2-29174598
URL: *http://www.princeton.com.tw*

PIN CONFIGURATION

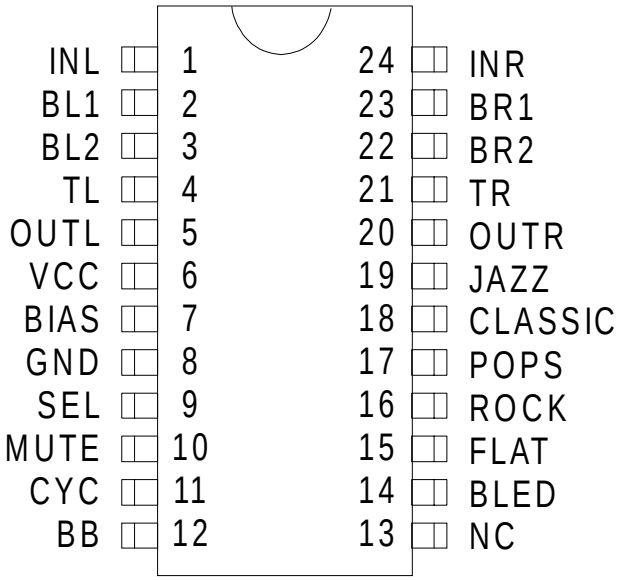

ORDER INFORMATION

Valid Part Number	Package
PT2388	24 Pins, DIP (300 mil)
PT2388-S	24 Pins, SO (300 mil)

Tel : 886-2-29162151
Fax: 886-2-29174598
URL: *http://www.princeton.com.tw*

APPLICATION CIRCUIT

Direct Key Mode

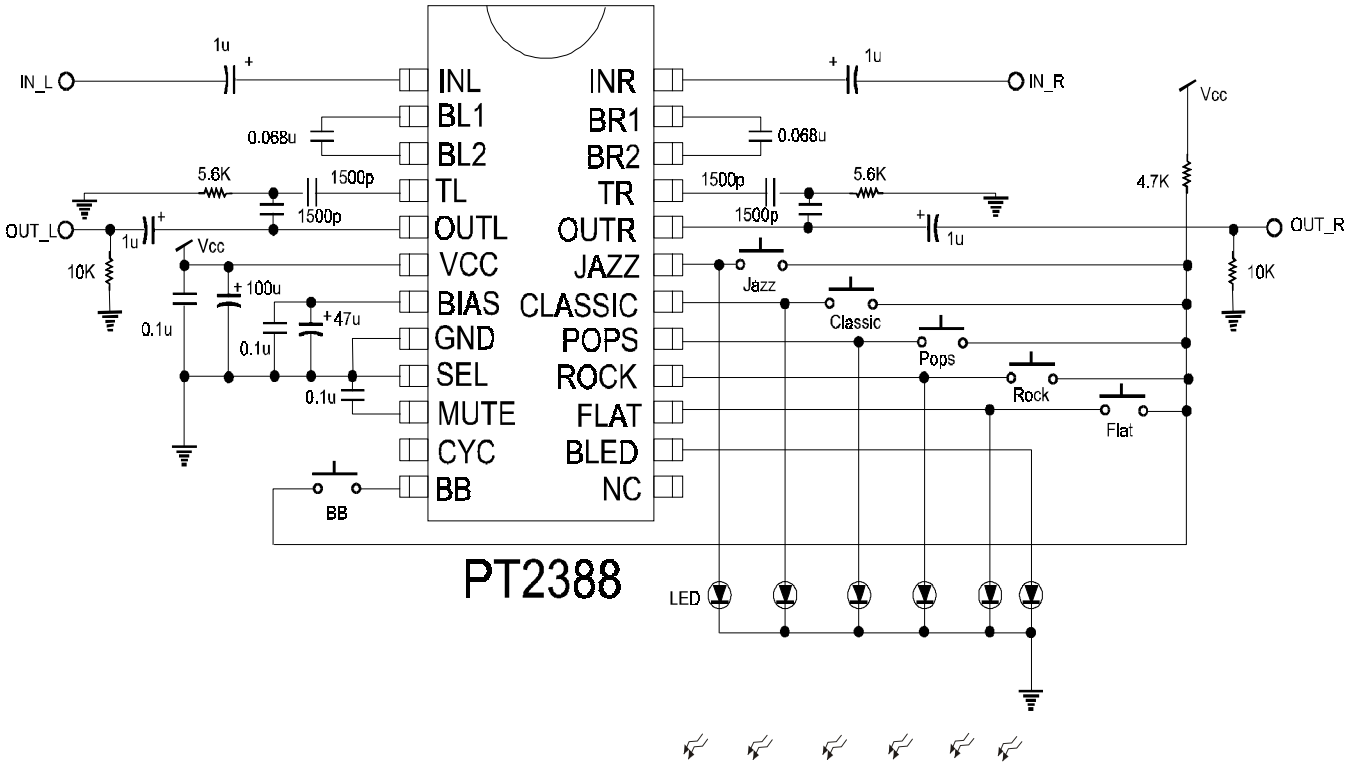

Note: Please use 0.068uF , 1500pF Mylar Capacitors.

APPLICATION CIRCUIT

Cyclic Key Mode

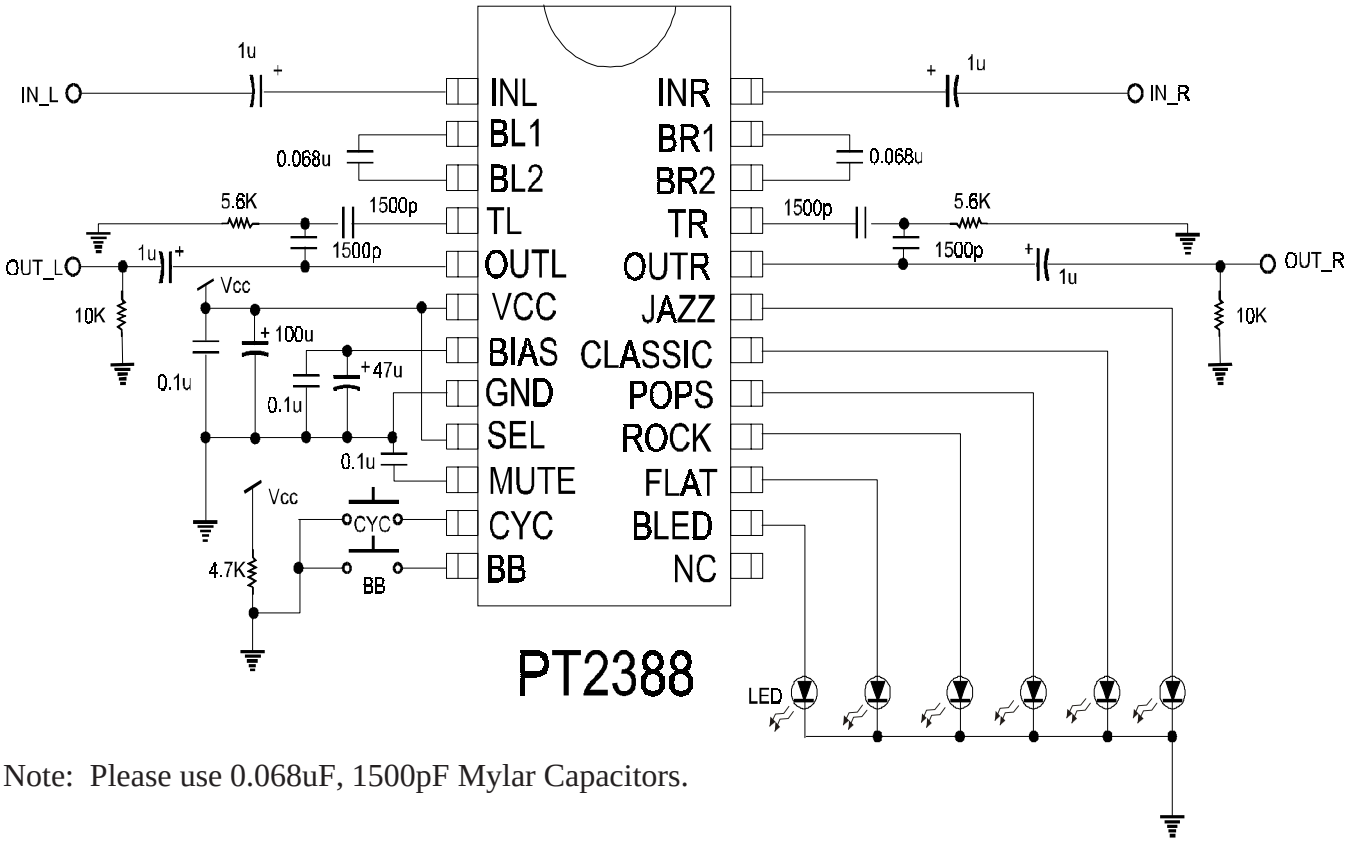

Note: Please use 0.068uF, 1500pF Mylar Capacitors.