Tel: 886-2-66296288
Fax: 886-2-29174598
URL: http://www.princeton.com.tw

5-Mode Preset Equalizer IC **PT2388**

DESCRIPTION

PT2388 is a 2-channel digital preset equalizer utilizing CMOS Technology. It provides 5 different sound selections, namely: Flat/Normal, Rock, Pops, Classic and Jazz. A Bass Booster may be added to any of 5 sound selections, thereby creating more audio versatility. PT2388 provides two types of key selection mode, namely: the Direct and the Cyclic. Pin assignment and application circuit are optimized for cost saving advantages and easy PCB layout.

FEATURES

- CMOS technology
- Low total harmonic distortion and high S/N ratio: THD + N < 0.02%, S/N > 95dB
- LED display output mode
- Least external components
- 5 sound selections provided: Flat/Normal, Classic, Rock, Pops, and Jazz
- Bass booster function
- 2-channel output
- Wide operating voltage Range: 5 ~ 9V
- Direct or cyclic key selection is provided
- Available in DIP or SOP

APPLICATIONS

- Walkman
- Car audio
- Fader
- Multimedia audio components
- MPEG card

Tel: 886-2-66296288
Fax: 886-2-29174598
URL: http://www.princeton.com.tw

PIN CONFIGURATION

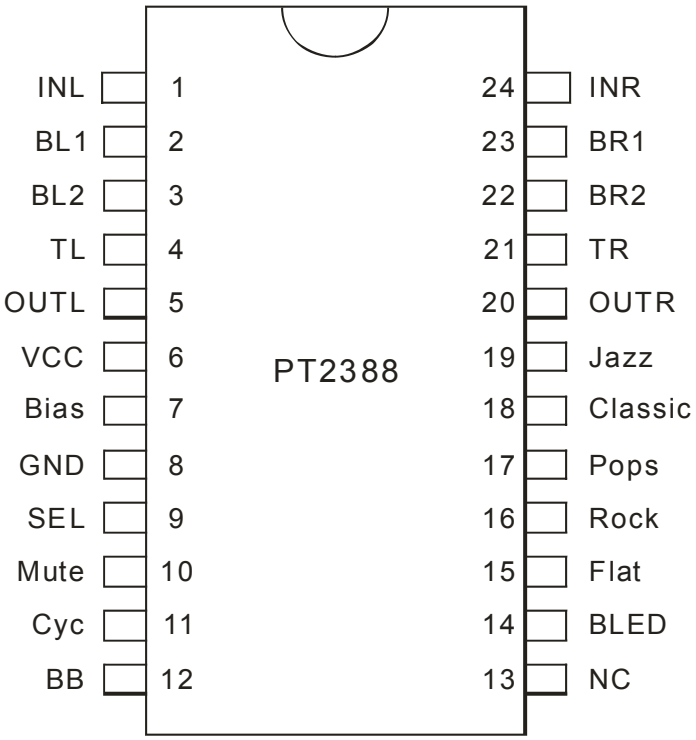

Tel: 886-2-66296288
Fax: 886-2-29174598
URL: http://www.princeton.com.tw

APPLICATION CIRCUIT

DIRECT KEY MODE

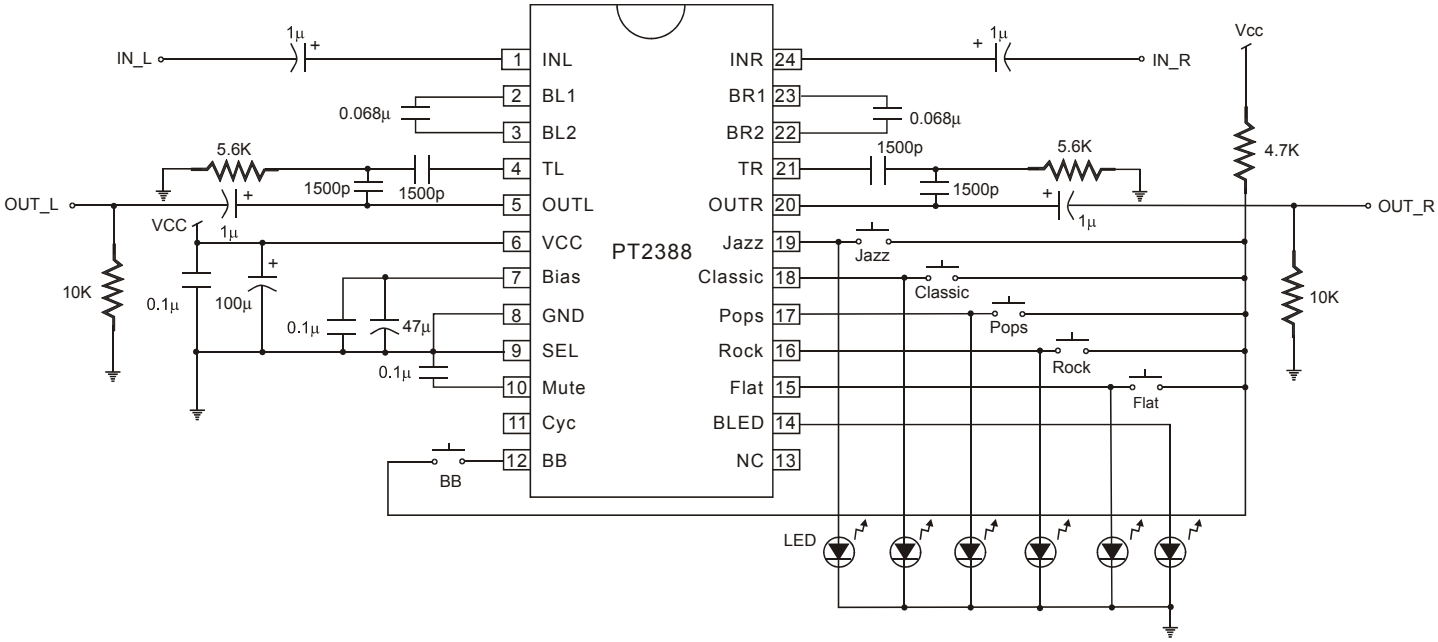

Note:
Please use 1500pF, 0.068µF Mylar Capacitors.

Tel: 886-2-66296288
Fax: 886-2-29174598
URL: http://www.princeton.com.tw

CYCLIC KEY MODE

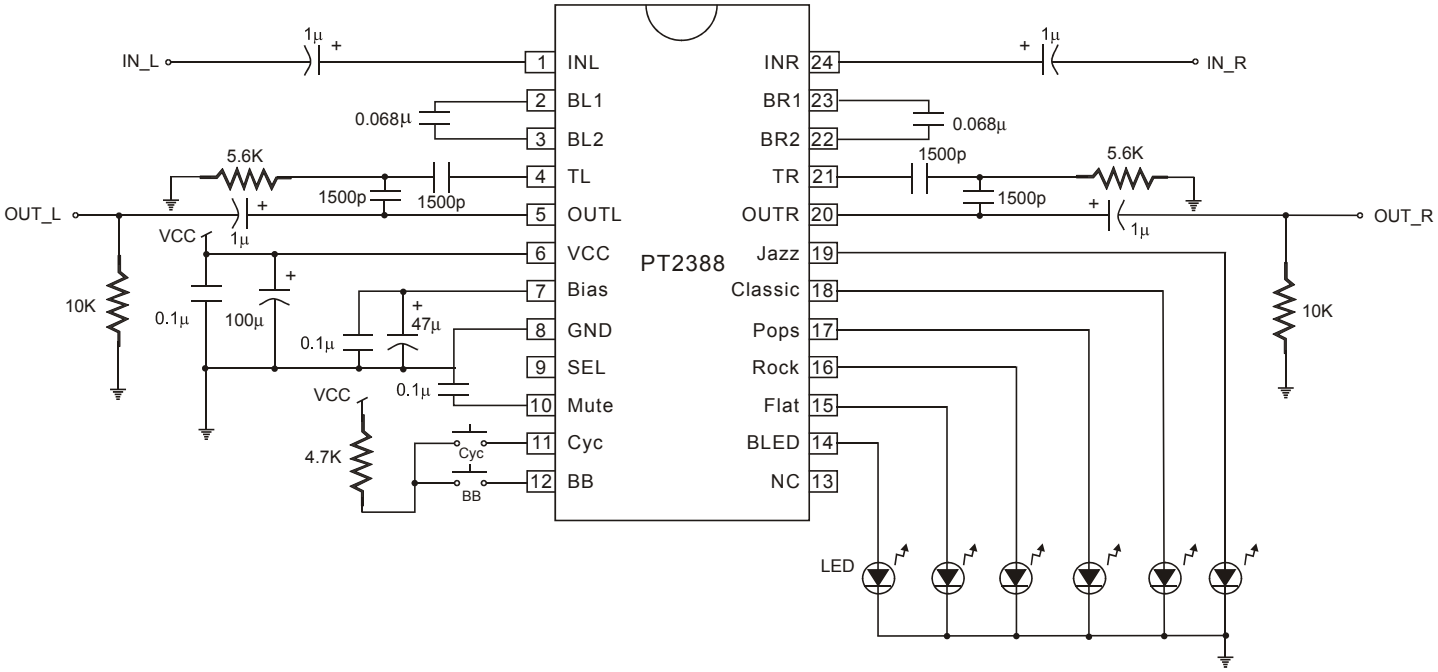

Note:
Please use 1500pF, 0.068µF Mylar Capacitors.

Tel: 886-2-66296288
Fax: 886-2-29174598
URL: http://www.princeton.com.tw

ORDER INFORMATION

Valid Part Number	Package Type	Top Code
PT2388	24 Pins, DIP, 300mil	PT2388
PT2388-S	24 Pins, SOP, 300mil	PT2388-S

Tel: 886-2-66296288
Fax: 886-2-29174598
URL: http://www.princeton.com.tw

PACKAGE INFORMATION

24 PINS, DIP, 300MIL

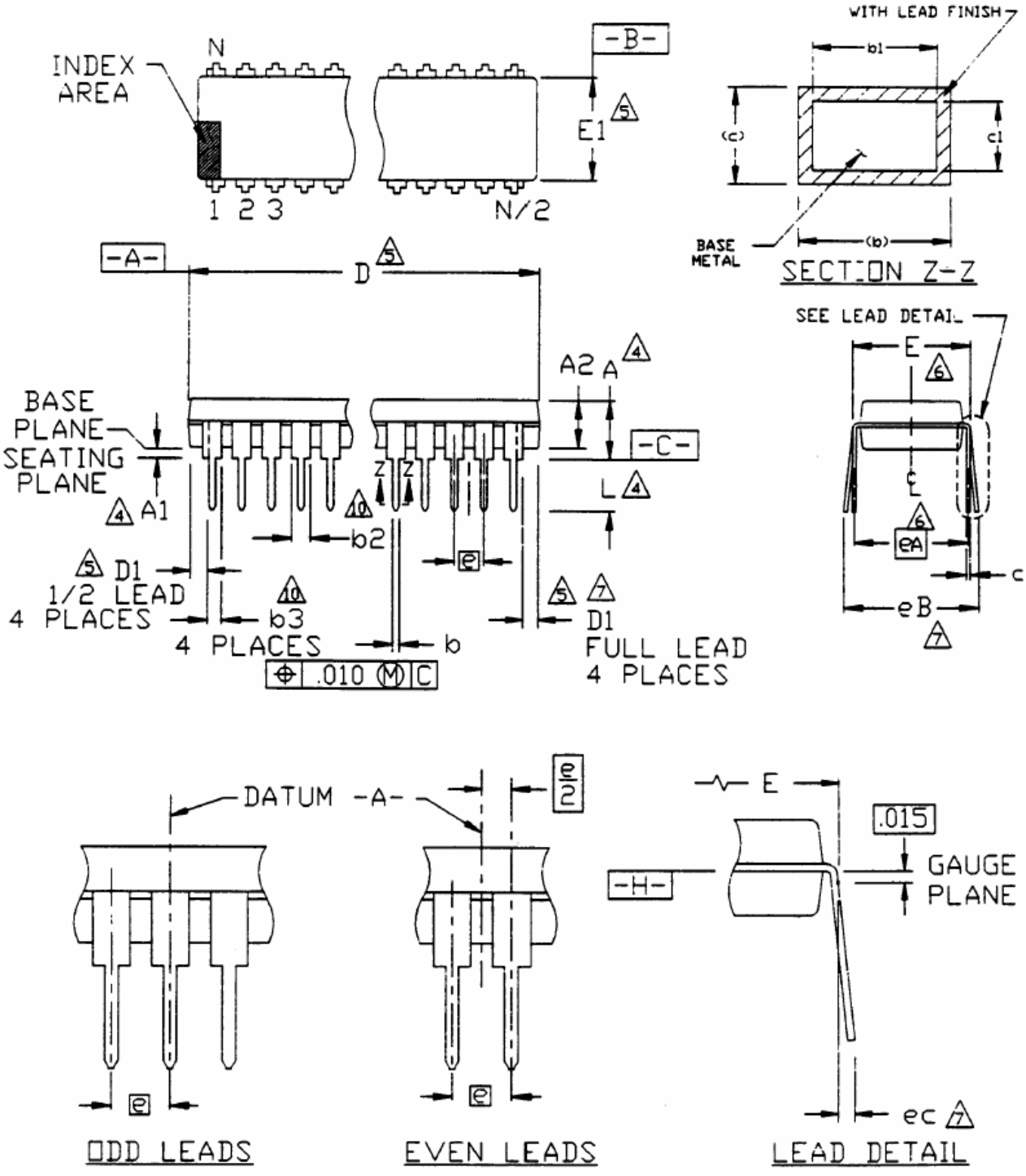

Symbols	Dimensions		
	Min.	Nom.	Max.
A			0.210
A1	0.015		
A2	0.115	0.130	0.195
b	0.014	0.018	0.022
b1	0.014	0.018	0.020
b2	0.045	0.060	0.070
b3	0.030	0.039	0.045
c	0.008	0.010	0.014
c1	0.008	0.010	0.011
D	1.160	1.185	1.195
D1	0.005		
E	0.300	0.310	0.325
E1	0.240	0.250	0.280
e	0.100 bsc.		
eA	0.300 bsc.		
eB			0.430
eC	0.000		0.060
L	0.115	0.130	0.150

Notes:
1. All dimensions are in INCHES.
2. Dimensioning and tolerancing per ANSI Y 14.5-1982.
3. Dimension “A”, “A1” and “L” are measured with the package seated in JEDEC Seating Plane Gauge GS-3.
4. “D”, “D1” and “E1” dimensions do not include mold flash or protrusions. Mold flash or protrusions shall not exceed 0.010 inch.
5. “E” and “eA” measured with the leads constrained to be perpendicular to datum -c-.
6. “eB” and “eC” are measured at the lead tips with the leads unconstrained.
7. N is the number of terminal positions. (N=24)
8. Pointed or rounded lead tips are preferred to ease insertion.
9. “b2” and “b3” maximum dimensions are not include dambar protrusions. Dambar protrusions shall not exceed 0.010 inch (0.25mm)
10. Distance between leads including Dambar protrusions to be 0.005 inch. minimum.
11. Datum plane -H- coincident with the bottom of lead, where lead exits body.
12. Refer to JEDEC MS-001, Variation BE.

JEDEC is the trademark of JEDEC SOLID STATE TECHNOLOGY ASSOCIATION.

Tel: 886-2-66296288
Fax: 886-2-29174598
URL: http://www.princeton.com.tw

24 PINS, SOP, 300MIL

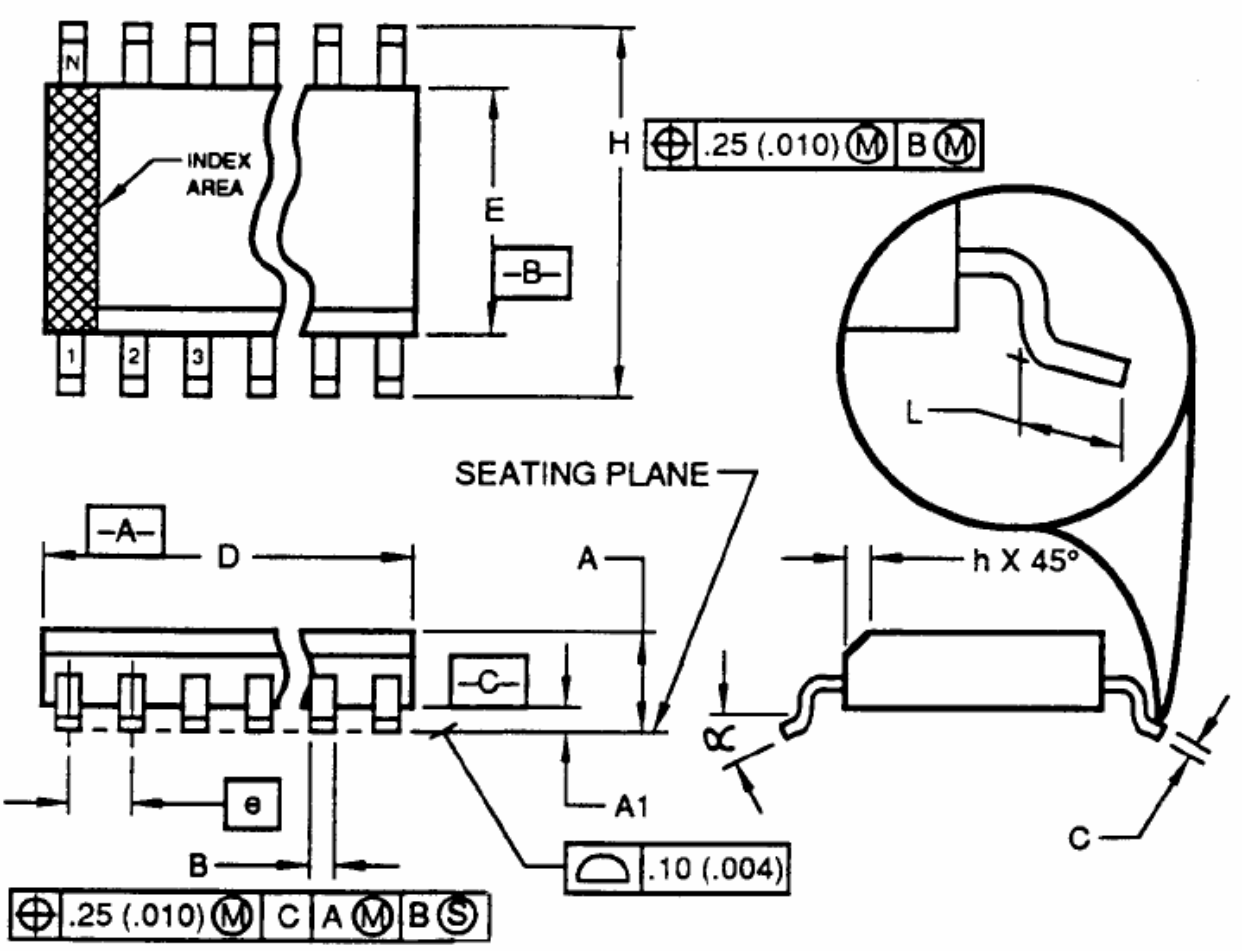

Symbols	Dimensions		
	Min.	Nom.	Max.
A	2.35		2.65
A1	0.10		0.30
B	0.33		0.51
C	0.23		0.32
D	15.20		15.60
E	7.40		7.60
e	1.27 bsc.		
H	10.00		10.65
h	0.25		0.75
L	0.40		1.27
α	0°		8°

Notes:
1. Dimensioning and tolerancing per ANSI Y 14.5-1982.
2. Dimension “D” does not include mold flash, protrusions or gate burrs. Mold Flash, protrusion or gate burrs shall not exceed 0.15mm (0.006 in)per side.
3. Dimension “E” does not include interlead flash protrusions. Interlead flash or protrusions shall not exceed 0.25 mm (0.010 in) per side.
4. The chamfer on the body is optional. It is not present, a visual index feature must be located within the crosshatched area.
5. “L” is the length of the terminal for soldering to a substrate.
6. “N” is the number of terminal position. (N=24)
7. The lead width “B” as measured 0.36 mm (0.014 in) or greater above the seating plane, shall not exceed a maximum value of 0.61mm (0.24 in).
8. Controlling dimension: MILLIMETER.
9. Refer to JEDEC MS-013, Variation AD.

JEDEC is the trademark of JEDEC SOLID STATE TECHNOLOGY ASSOCIATION.