Princeton Technology Corp.
Tel : 886-2-29162151
Fax: 886-2-29174598
URL: *http://www.princeton.com.tw*

Headphone Driver IC **PT2308**

DESCRIPTION

PT2308 is a Class AB stereo headphone driver chip utilizing CMOS Technology specially designed for portable digital audio applications. It is housed in an 8-pin DIP or SO package and is functionally compatible with TDA1308. Pin assignments and application circuit are optimized for lower cost effectiveness and easy PCB Layout

FEATURES

- CMOS Technology
- Low Power Consumption
- Wide Temperature Range
- Excellent Power Supply Ripple Rejection
- High Signal-to-Noise Ratio, S/N=110dB
- Low Harmonic Distortion, THD= 0.001%
- Large Output Voltage Swing

APPLICATIONS

- Portable Digital Audio
- Hi-fi Audio System
- Walkman
- CD-ROM

Tel : 886-2-29162151
Fax: 886-2-29174598
URL: *http://www.princeton.com.tw*

PIN CONFIGURATION

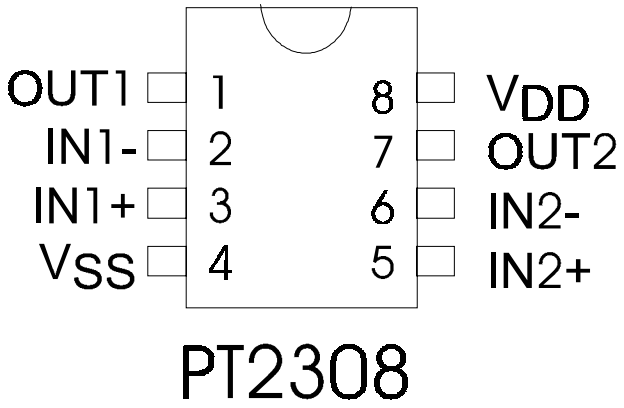

APPLICATION CIRCUIT

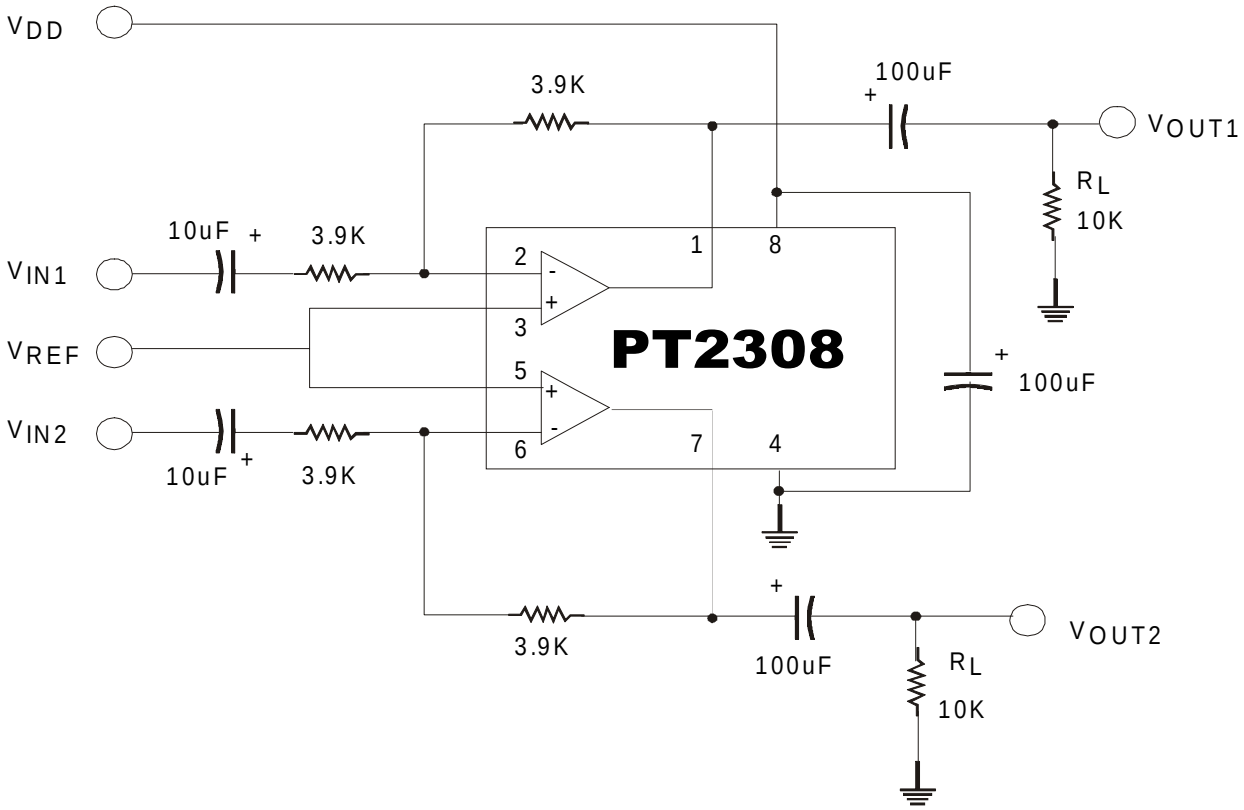

Tel : 886-2-29162151
Fax: 886-2-29174598
URL: *http://www.princeton.com.tw*

ORDER INFORMATION

Valid Part Number	Package
PT2308	8 Pins, DIP (300 mil)
PT2308-S	8 Pins, SO (150 mil)