EVAL-M1-05-65D User Manual

iMOTION™ Modular Application Design Kit

About this document

Scope and purpose

This application note provides an overview of the evaluation-board EVAL-M1-05-65D including its main features, key data, pin assignments and mechanical dimensions.

EVAL-M1-05-65D is a complete evaluation-board including a 3-phase IPM for motor drive application. In combination with either EVAL-M1-101T or EVAL-M1-099M it features and demonstrates Infineon's IPM technology for motor drive.

The evaluation board EVAL-M1-05-65D for Intelligent Power Modules (IPM) was developed to support Customers during their first steps designing applications with CIPOS™ Micro power modules.

Intended audience

This application note is intended for all technical specialists working with the EVAL-M1-05-65D board.

Table of Contents

About this document **1**
Table of Contents **1**
1 Safety precautions **2**
2 Introduction **4**
3 Main features **5**
3.1 Key data 6
4 Pin assignments **10**
5 Getting Started with EVAL-M1-05-65D **12**
5.1 Setting up the system 12
5.2 iMOTION™ development tools and software 14
5.2.1 MCEWizard setup overview 14
5.2.2 MCEDesigner setup overview 16
6 Schematics and Layout **18**
6.1 DC-Link Voltage Measurement 18
6.2 Thermistor Output 19
6.3 EMI input filter and rectifier circuit 19
6.4 Inverter section using CIPOS™ Micro 20
6.5 Power supply 21
6.6 Over current circuit 21
6.7 Layout 22
7 Bill of Materials of EVAL-M1-05-65D **24**
8 Reference **26**
Revision History **27**

1 Safety precautions

In addition to the precautions listed throughout this manual, please read and understand the following statements regarding hazards associated with development systems.

Table 1 Precautions

	***Attention:*** ***The ground potential of the EVAL-M1-05-65D system is biased to a negative DC bus voltage potential. When measuring voltage waveform by oscilloscope, the scope's ground needs to be isolated. Failure to do so may result in personal injury or death. Darkened display LEDs are not an indication that capacitors have discharged to safe voltage levels.***
	***Attention:*** ***EVAL-M1-05-65D system contains DC bus capacitors which take time to discharge after removal of the main supply. Before working on the drive system, wait three minutes for capacitors to discharge to safe voltage levels. Failure to do so may result in personal injury or death. Darkened display LEDs are not an indication that capacitors have discharged to safe voltage levels.***
	***Attention:*** ***Only personnel familiar with the drive and associated machinery should plan or implement the installation, start-up and subsequent maintenance of the system. Failure to comply may result in personal injury and/or equipment damage.***
	***Attention:*** ***The surfaces of the drive may become hot, which may cause injury.***
	***Attention:*** ***EVAL-M1-05-65D system contains parts and assemblies sensitive to Electrostatic Discharge (ESD). Electrostatic control precautions are required when installing, testing, servicing or repairing this assembly. Component damage may result if ESD control procedures are not followed. If you are not familiar with electrostatic control procedures, refer to applicable ESD protection handbooks and guidelines.***
	***Attention:*** ***A drive, incorrectly applied or installed, can result in component damage or reduction in product lifetime. Wiring or application errors such as under sizing the motor, supplying an incorrect or inadequate AC supply or excessive ambient temperatures may result in system malfunction.***
	***Attention:*** ***Remove and lock out power from the drive before you disconnect or reconnect wires or perform service. Wait three minutes after removing power to discharge the bus capacitors. Do not attempt to service the drive until the bus***

		capacitors have discharged to zero. Failure to do so may result in personal injury or death.
	***Attention:***	***EVAL-M1-05-65D system is shipped with packing materials that need to be removed prior to installation. Failure to remove all packing materials which are unnecessary for system installation may result in overheating or abnormal operating condition.***

2 Introduction

The EVAL-M1-05-65D evaluation board is a part of the iMOTION™ Modular Application Design Kit for drives (iMOTION™ MADK).

The MADK-platform is intended to use various power stages with different control boards. These boards can easily be interfaced through the 20 pin iMOTION™ MADK-M1 interface connector.

This evaluation board is designed to give comprehensible solutions of a power stage featuring µIPM™ -DIP. The board is equipped with all assembly groups for sensor less field oriented control (FOC). It provides a single-phase AC-connector, rectifier, DC-link and 3-phase output for power. It contains emitter-shunts for current sensing and a voltage divider for DC-link voltage measurement.

The EVAL-M1-05-65D evaluation board is available from Infineon. The features of this board are described in the design feature chapter of this document, whereas the remaining paragraphs provide information to enable the customers to copy, modify and qualify the design for production according to their own specific requirements.

Environmental conditions were considered in the design of the EVAL-M1-05-65D. The design was tested as described in this document but not qualified regarding safety requirements or manufacturing and operation over the whole operating temperature range or lifetime. The boards provided by Infineon are subject to functional testing only.

Evaluation boards are not subject to the same procedures as regular products regarding Returned Material Analysis (RMA), Process Change Notification (PCN) and Product Discontinuation (PD). Evaluation boards are intended to be used under laboratory conditions by specialists only.

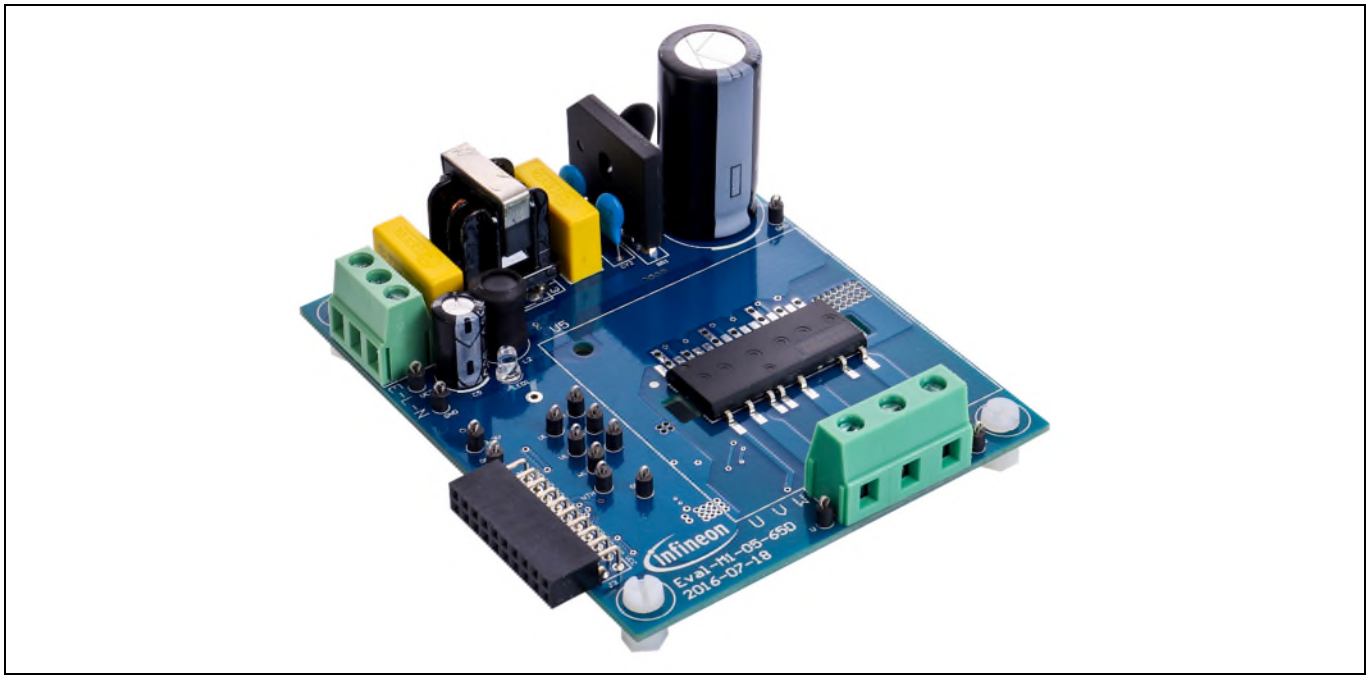

Figure 1 Evaluation-board EVAL-M1-05-65D

Figure 1 shows the evaluation board EVAL-M1-05-65D. Although this board is compatible with on surface mount as well as through whole CIPOS™ Micro modules. This document explains the features and details of this board in combination with CIPOS™ Micro IRSM515-065 and IRSM505-065. The only difference between these modules is the presence of a NTC. IRSM505-065 has a NTC and IRSM515-065 does not. Both modules are rated 500 V. Ratings and other details of the board are explained in the subsequent sections.

3 Main features

EVAL-M1-05-65D is a complete evaluation board including a 3-phase IPM for motor drive application. The kit demonstrates Infineon's IPM technology for motor drives.

Main features of CIPOS™ Micro Intelligent Power Module IRSM515-065 and IRSM505-065 are:

- 3-phase inverter including high voltage gate drivers
- Integrated bootstrap functionality
- Trench FREDFET with $R_{DS(on)}$ of 1.3 Ω @ 25°C
- Under voltage lockout for all channels
- Matched propagation delay for all channels
- Temperature feedback via NTC applicable for IRSM505-065
- Optimized dV/dt for loss and EMI trade off
- 3.3 V logic compatible and advanced input filter
- Possibility to choose single shunt or leg shunt current sensing
- Driver tolerant to negative transient voltage
- Isolation 1900 V_{rms}, 1min
- Certified by UL file number E252584

The evaluation board characteristics are:

- Nominal input voltage 240 V_{AC}
- 20 – 150 W motor power range without heatsink
- On board EMI filter
- Current sensing for each phase configured by default
- Over current protection
- Sensing of DC-link voltage
- Thermistor output
- Fault diagnostic output
- Measurement test-points compatible to standard oscilloscope probes
- PCB is 90 x 75 mm and has two layers with 35 µm copper each
- RoHS compliant

3.1 Key data

Figure 2 provides the overview of the IRSM505-065 and IRSM515-065 internal electrical schematics. For further information regarding these IPMs like static and dynamic electrical behavior, as well as thermal and mechanical characteristics please refer to the datasheet of the IRSM505-065 or IRSM515-065. Table 2 provides the absolute maximum ratings of the IRSM505-065 or IRSM515-065.

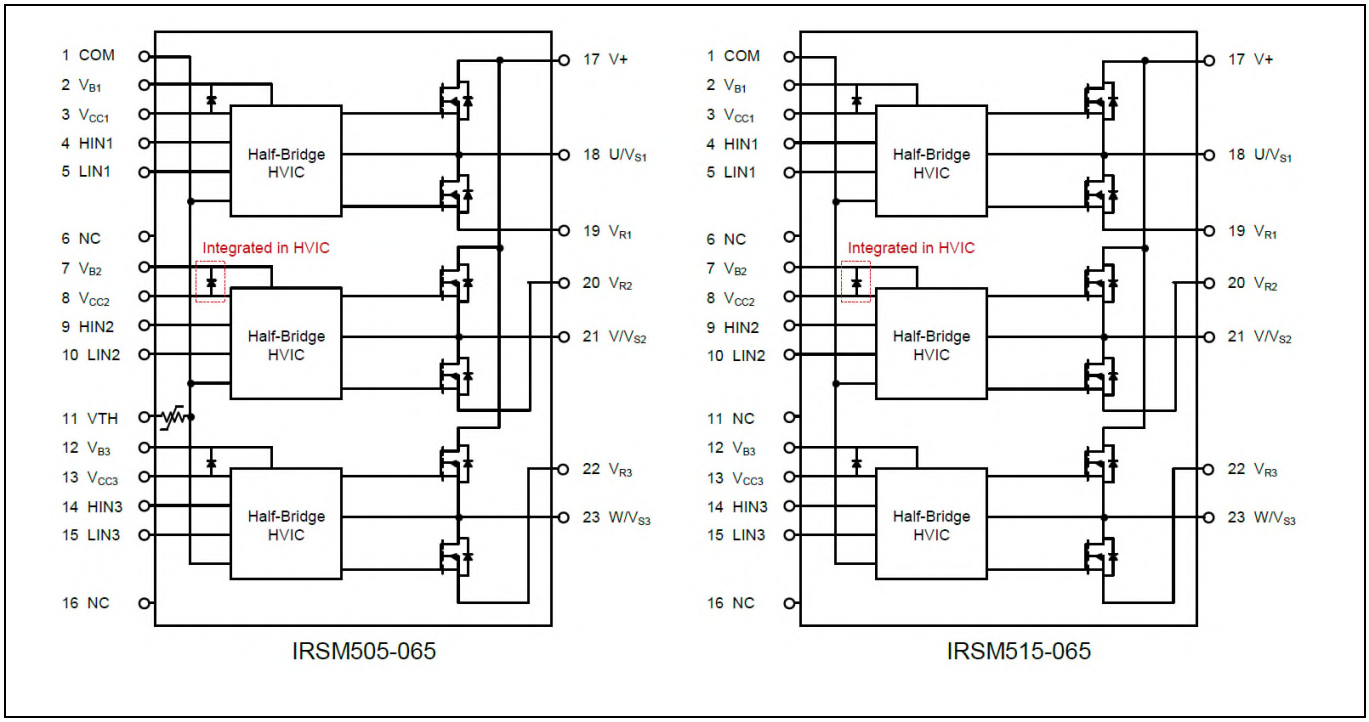

Figure 2 CIPOS™ Micro internal electrical schematic

Table 2 CIPOS™ Micro Absolute Maximum Ratings of IRSM505-065 or IRSM515-065

Symbol	Description	Min	Max	Unit
V_{DSS}	MOSFET Blocking Voltage	---	500	V
I_O @ T=25°C	DC Output Current per MOSFET	---	2.6	A
P_d @ T_C=25°C	Maximum Power Dissipation per MOSFET	---	19	W
V_{ISO}	Isolation Voltage (1min)	---	1900	V_{rms}
T_J	Operating Junction Temperature	-40	150	°C
T_C	Operating Case Temperature	-40	150	°C
T_S	Storage Temperature	-40	150	°C
$V_{S1,2,3}$	High Side Floating Supply Offset Voltage	$V_{B1,2,3}$ - 20	$V_{B1,2,3}$ +0.3	V
$V_{B1,2,3}$	High Side Floating Supply Voltage	-0.3	275	V
V_{CC}	Low Side and Logic Supply voltage	-0.3	25	V
V_{IN}	Input Voltage of LIN, HIN	-0.3	V_{CC}+0.3	V

1. *Absolute maximum ratings are limitations which should not be less than minimum or higher than maximum ratings. Outside these limitations for safe operation, damage of the module should be expected.*

Table 3 depicts the recommended operating conditions of IRSM505-065 or IRSM515-065.

Table 3 Recommended operating conditions of CIPOS™ Micro IRSM505-065 or IRSM515-065

Symbol	Description	Min	Max	Unit
V+	Positive DC Bus Input Voltage	$2 \cdot V_{CC}+5$	400	V
$V_{S1,2,3}$	High Side Floating Supply Offset Voltage	---	400	V
$V_{B1,2,3}$	High Side Floating Supply Voltage	$V_{Sx}+12$	$V_{Sx}+20$	V
V_{CC}	Low Side and Logic Supply Voltage	13.5	16.5	V
V_{IN}	Input Voltage of LIN, HIN, I_{TRIP}, EN, FLT	0	5	V
f_{SW}	PWM Carrier Frequency	---	20	kHz

Table 4 shows the important specifications of the evaluation board EVAL-M1-05-65D.

Table 4 EVAL-M1-05-65D board specifications

Parameters	Value	Conditions
Input		
Voltage	100-240 V_{rms}	
Frequency	50/60 Hz	
Input current	1.5 A_{rms}	IRSM505-065DA/ IRSM515-065DA, module T_c = 70°C without heatsink
Output		
Power (3phases)	90 W**	IRSM505-065DA/ IRSM515-065DA
Current per leg	650 mA*	IRSM505-065DA/ IRSM515-065DA
	*rms, f_{PWM}=6 kHz, T_a=25°C, **input 220V_{AC}, T_c=125°C, */**without heatsink	
DC Bus		
Maximum DC bus voltage	400 V	
Minimum DC bus voltage	110 V	
Current feedback		
Current sensing devices RS1, RS2, RS3	0.25 Ω	The default configuration uses three shunts in the emitter paths. To implement single shunt sensing, the board should be modified: 1) RS1 and RS3 have to be removed 2) IU+,IV+,IW+ have to be connected 3) R7 has to be changed to 3.48 kΩ
Protections		
Output current trip level	2.5A_{pk}	Configured by either changing shunt resistors RS1, RS2, RS3 or adapting comparator threshold changing resistor R7
On board power supply		
15 V	15 V±5 %, Max 20 mA	Used for CIPOS™ Micro gate driver power
3.3 V	3.3 V±5 %, Max 50 mA	Used for interface signals to the control board and alarm signals as I_{TRIP}, FLT/EN
PCB characteristics		
Material	FR4, 1.6 mm thickness, 2-layers. 35 µm copper thickness	
Dimension	90 mm x 75 mm	
System environment		
Ambient temperature	From 0 to 70°C	Non-condensing, maximum RH of 95 %

Figure 3 and Figure 4 hint out the functional groups of the EVAL-M1-05-65D evaluation board.

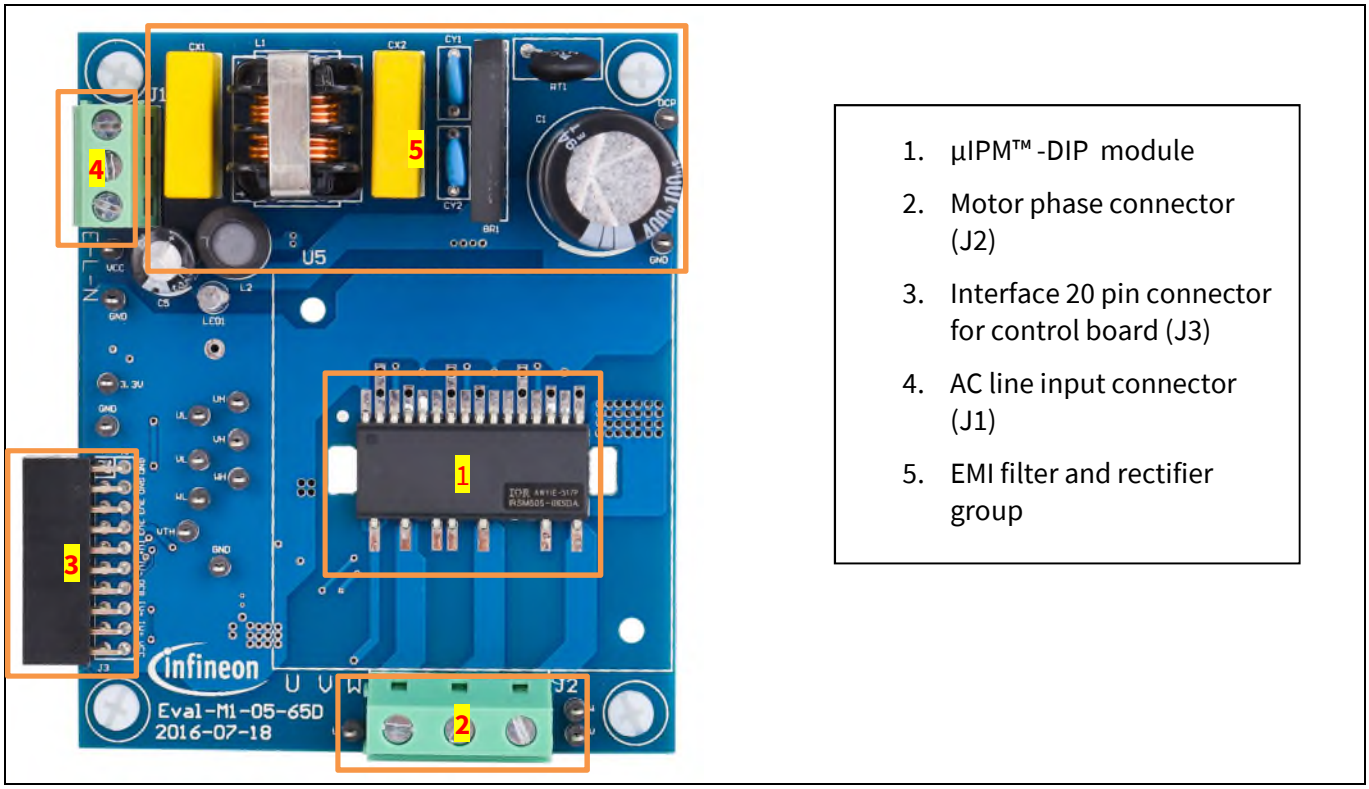

1. µIPM™-DIP module
2. Motor phase connector (J2)
3. Interface 20 pin connector for control board (J3)
4. AC line input connector (J1)
5. EMI filter and rectifier group

Figure 3 Functional groups of the EVAL-M1-05-65D evaluation board's top side

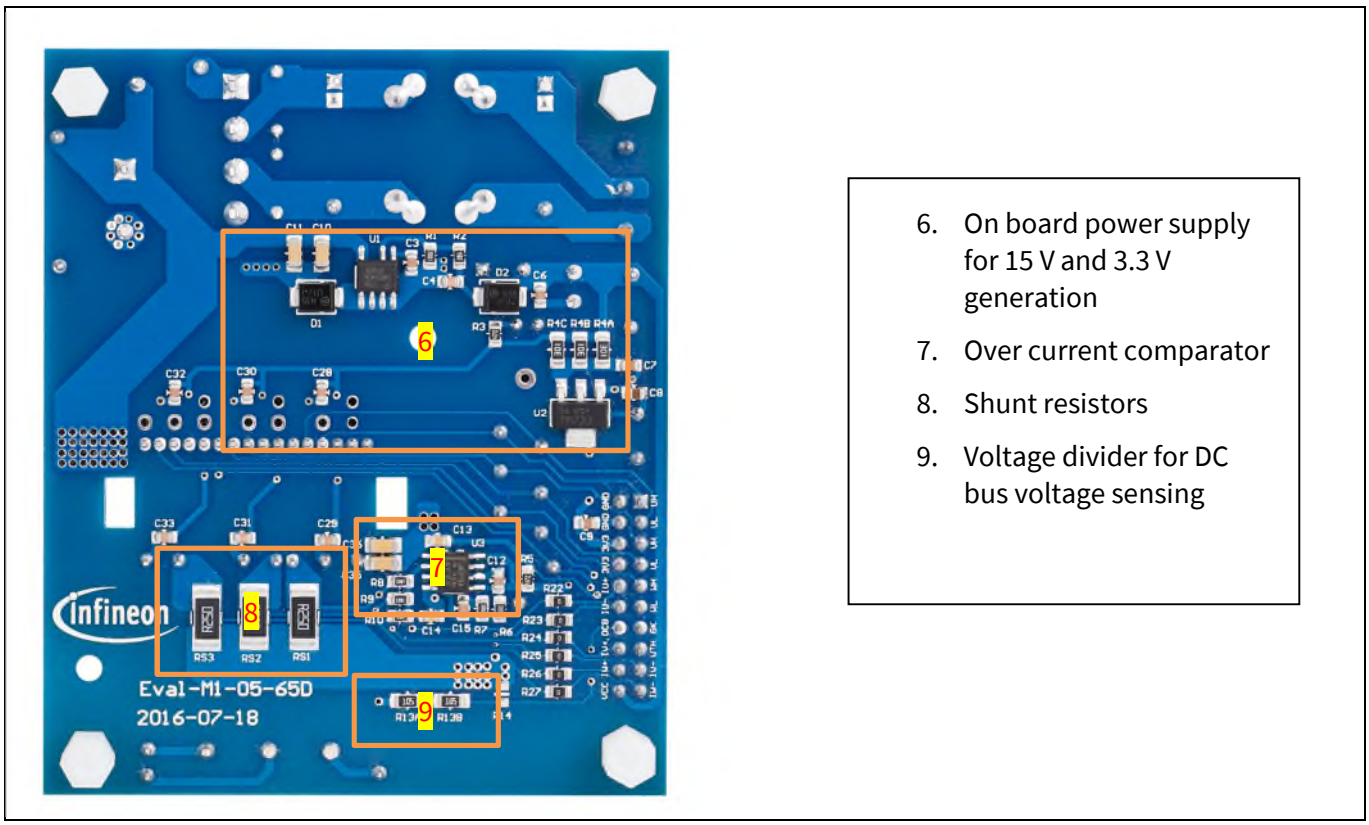

6. On board power supply for 15 V and 3.3 V generation
7. Over current comparator
8. Shunt resistors
9. Voltage divider for DC bus voltage sensing

Figure 4 Functional groups of the EVAL-M1-05-65D evaluation board's bottom side

4 Pin assignments

General information about the connectors of the EVAL-M1-05-65D evaluation board is reported. Table 5 includes the details of the line connector J1-AC. It is possible to connect DC voltage to the AC connector. In this case a permanent DC-current will be conducted through the rectifier bridge. Maximum ratings are valid for AC as well as DC conditions. It is recommended to observe the temperature of the rectifier bridge. Due to the rectifier, DC supply's polarity at the connector is of no concern.

The evaluation board doesn't have a fuse. An external fuse is highly recommended during testing.

Table 5 J1- AC Line connector

S. No.	Pin	Details
1	E	Earth ground
2	L	AC line input (120 V – 240 V) or DC+ connector
3	N	AC neutral input or DC- connector

Table 6 denotes the details of the motor side connector J2.

Table 6 J2- Motor side connector

S. No.	Pin	Details
1	U	Connected to motor phase U
2	V	Connected to motor phase V
3	W	Connected to motor phase W

Pin assignments

Table 7 provides the pin assignments of the M1 20 pin interface connector J3. This connector is the interface to the controller board.

Table 7 J3 - 20 pin interface connector for controller board

Pin	Name	Connectors
1	PWMUH	3.3 V compatible logic input for high side gate driver-Phase1 [2]
2	GND	Ground
3	PWMUL	3.3 V compatible logic input for low side gate driver-Phase1 [2]
4	GND	Ground
5	PWMVH	3.3 V compatible logic input for high side gate driver-Phase2 [2]
6	+3.3V	On board 3.3 V supply
7	PWMVL	3.3 V compatible logic input for low side gate driver-Phase2 [2]
8	+3.3V	On board 3.3 V supply
9	PWMWH	3.3 V compatible logic input for high side gate driver-Phase3 [2]
10	IU+	Shunt voltage phase U
11	PWMWL	3.3 V compatible logic input for low side gate driver-Phase3 [2]
12	IU-	Ground
13	GK	Gate kill signal – active low when over current is detected [3]
14	DCBSENSE	DC bus positive voltage, scaled in 0-3.3 V range by a voltage divider
15	VTH	Thermistor Output
16	IV+	Shunt voltage phase V
17	IV-	Ground
18	IW+	Shunt voltage phase W
19	IW-	Ground
20	VCC	15 V Supply

2. *Input signals are active high. Pull-down resistors are not inserted on the EVAL-M1-05-65D board and need to be assembled on control cards. iMOTION™ MADK control cards are already equipped with pull-down resistors.*
3. *Gate Kill signal (GK) is pulled low during over current condition. Chapter 6.6 explains the details of this circuit.*

5 Getting Started with EVAL-M1-05-65D

In order to run the motor system, a combination of the iMOTION™ MADK power board EVAL-M1-05-65D and the matching MADK control board (with M1 connector, EVAL-M1-101T for example in this chapter) is required. The iMOTION™ Software Tools MCEDesigner and MCEWizard are also required in order to initially setup the system, as well as to control and fine-tune the system performance to match users exact needs. This chapter provides more details on setting up the system and getting started with iMOTION™ MADK development platform.

5.1 Setting up the system

After downloading and installing the iMOTION™ PC Tools (MCEWizard and MCEDesigner), following steps need to be executed in order to run the motor. Refer to chapters 5.2.1 and 5.2.2 as well as MCEWizard and MCEDesigner documentation for more information.

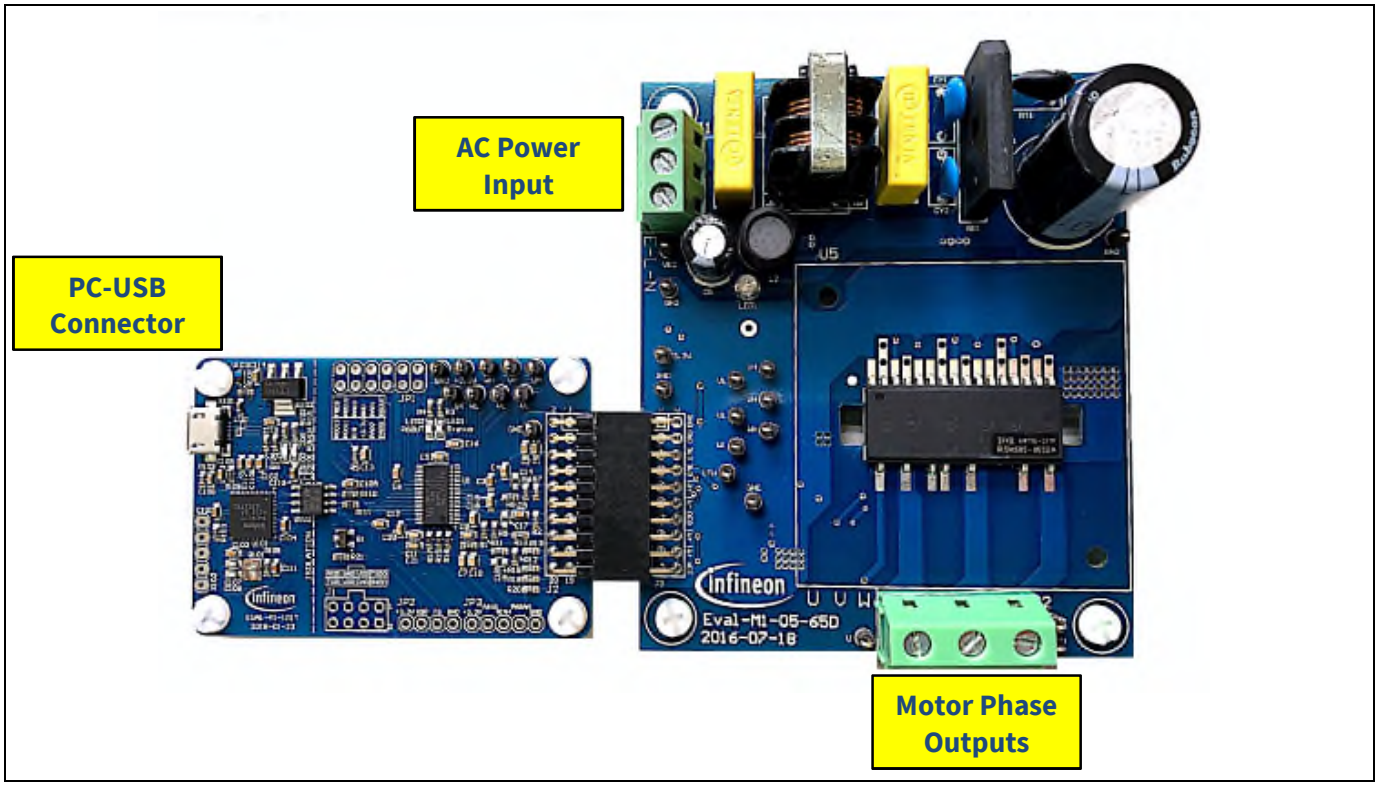

Figure 5 System connection example using EVAL-M1-101T and EVAL-M1-05-65D

1. Get the latest ”IMC101T-T038 MCE Software Package” available on www.infineon.com/imotion-software web page.
2. Connect PC-USB connector on the on-board-debugger to the PC via USB cable.
3. Connect EVAL-M1-101T’s M1 20-pin interface connector (J2) to power board (For example EVAL-M1-05-65D, see Figure 5).
4. Use MCEWizard to enter the target motor’s system and operating parameters, as well as evaluation board’s hardware parameters, which will then be used to calculate controller’s digital parameter set representing complete motor drive system. First click “Calculate” button on the “Verify & Save Page” and then save the drive parameter set into your project directory by clicking “Export to Designer file (.txt)”. Saved Drive System Parameter File will be later used by the MCEDesigner. Refer to Chapter 5.2.1 or MCEWizard User Guide for more details.
5. Connect motor phase outputs to the motor.
6. Connect AC power to power input connector and power on system.

7. Start MCEDesigner tool and open MCEDesigner default configuration file (.irc) for IMC101T-T038 controller (IMC101T_Vxxx.irc) by clicking “File” > “Open”. IMC101T_Vxxx.irc file is included in ”IMC101T-T038 MCE Software Package” downloaded in step 1.
8. MCEDesigner should automatically connect to the EVAL-M1-101T control board using default COM port (Indicated by green circle next to “COMx Up” status in the bottom frame of the MCEDesigner GUI). If it cannot establish the connection, change COM port by doing following steps: (“System” window active) > Preferences > Connection > Connect using (Chose one of the other available COM ports from the drop-down menu).
9. Use following steps to program the system parameters into the internal SRAM of iMOTION™ IC: Click “Tools” > “Programmer” and select “Program Parameters”. Browse and select the System Drive Parameters .txt file created in step 4. See chapter MCEDesigner setup overview 5.2.2 for more details.
10. Start the motor by clicking the green traffic light button in the control bar.

5.2 iMOTION™ development tools and software

The iMOTION™ Development Tool installers for MCEDesigner and MCEWizard are available for download via Infineon iMOTION™ website (http://www.infineon.com/imotion-software). All supported tools and software variants are listed there. Please visit this page periodically to check for tool/software updates.

Isolated on-board debugger provides the USB to UART bridge between the PC and the target iMOTION™ device with 1kV DC galvanic isolation between the motor drive system (hot side) and the PC/debugger (cold) side. On-board debugger uses the SEGGER J-Link driver for UART communication with IMC101T-T038. J-Link driver will be installed during the MCEDesigner installation. In case the driver is not installed properly, please go to SEGGER J-Link website to download and install the latest J-Link "Software and Documentation pack for Windows".

5.2.1 MCEWizard setup overview

After installing the MCEWizard, the shortcut for MCEWizard appears on the Windows desktop. Double click the shortcut to open the MCEWizard and configure the parameters for evaluation boards or motor. Figure 6 shows the "Welcome Page" for MCEWizard, where the MADK control board or power board can be selected through the pull-down list. Infineon keeps releasing new MADK controller and power boards. Therefore, it could happen that some of the newest power boards are not pre-configured in the MCEWizard tool and cannot be selected through the pull-down menu. In that case, the user should select any other power board (as similar as possible) and follow the MCEWizard setup steps by entering the parameter values which are specific to the chosen board. Make sure both "I have modified the circuit board" and "Enable advanced question" checkmarks are selected. Please refer to the Application Note of the corresponding power board for additional information.

After selecting the MADK control and the power board, start the MCEWizard system setup procedure by clicking the "Next" button in the right bottom corner as shown in Figure 6.

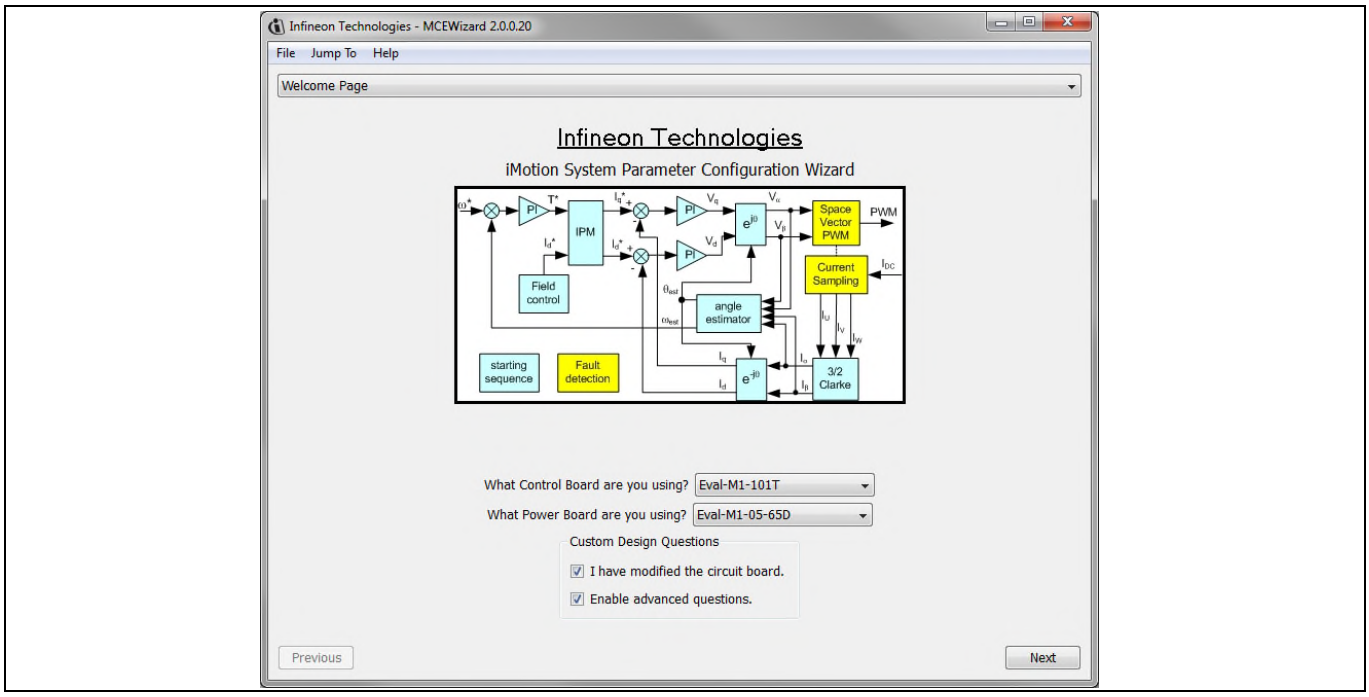

Figure 6 Welcome Page of MCEWizard

iMOTION™ MADK system enables users to easily test different combination of control and power board with their motors. User should be familiar with the system level parameters which are related to the motor used. There is a very limited number of parameters which are specific to the control board or power board hardware.

Table 8 provides the MCEWizard setup overview for hardware related parameters specific to EVAL-M1-05-65D power board. Similar tables will be available in each control board's Application Note. Combination of this table and the corresponding table of the control board provides enough information to setup the MADK-based motor drive system in shortest time.

Table 8 MCEWizard setup overview table

Page	Parameter	Value	Comment
Welcome Page	Control Board selecting	EVAL-M1-101T for example	
Welcome Page	Power Board selecting	EVAL-M1-05-65D	If no, select similar power board to modify
Options Page	Motor 1 Shunt Configuration	Leg shunt	
Question 3	Controller Supply Voltage	+3.3V	VDD is 3.3V by default
Question 19	Max DC Bus Voltage	380V	
Question 23	DC Bus Sensing High Resistor	2000 kΩ	
Question 24	DC Bus Sensing Low Resistor	Refer to the control board user manual	
Question 54	NTC Temperature Shutdown value	Refer to the control board user manual	
Question 63	GateSense Low-Side Devices	High is true	
Question 64	GateSense High-Side Devices	High is true	
Question 69	Motor 1 Current Input	Calculated in the corresponding Section in control board user manual	

After all the MCEWizard questions are answered, the "Verify & Save Page" will be shown as in Figure 7.

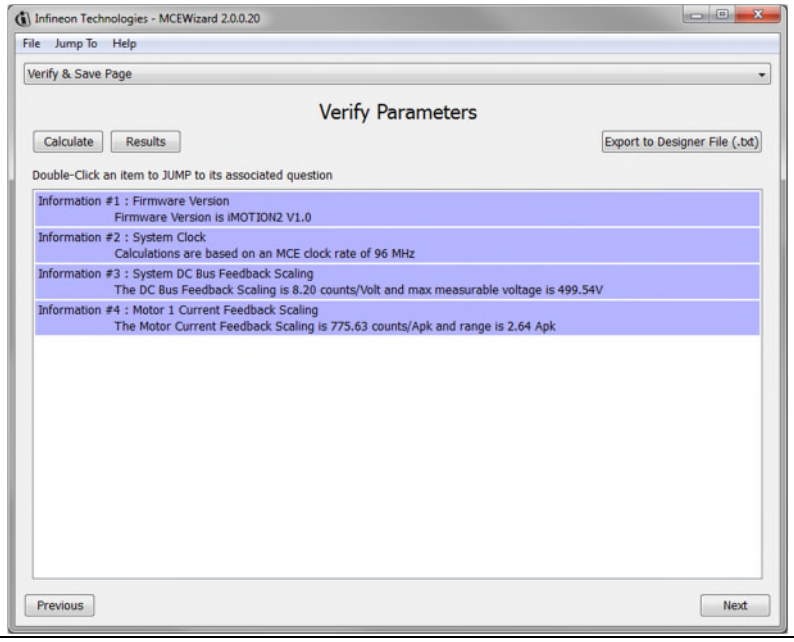

Figure 7 Verify and Save page for MCEWizard

Click "Calculate" button and "Export to Designer File (.txt)" button to save the parameter file which will be used by the MCEDesigner in the next steps.

5.2.2 MCEDesigner setup overview

After installing MCEDesigner installer, there is a shortcut for MCEDesigner on Windows desktop. Double click the shortcut to open MCEDesigner and then open “IMC101T_xx.irc” file as shown in Figure 8.

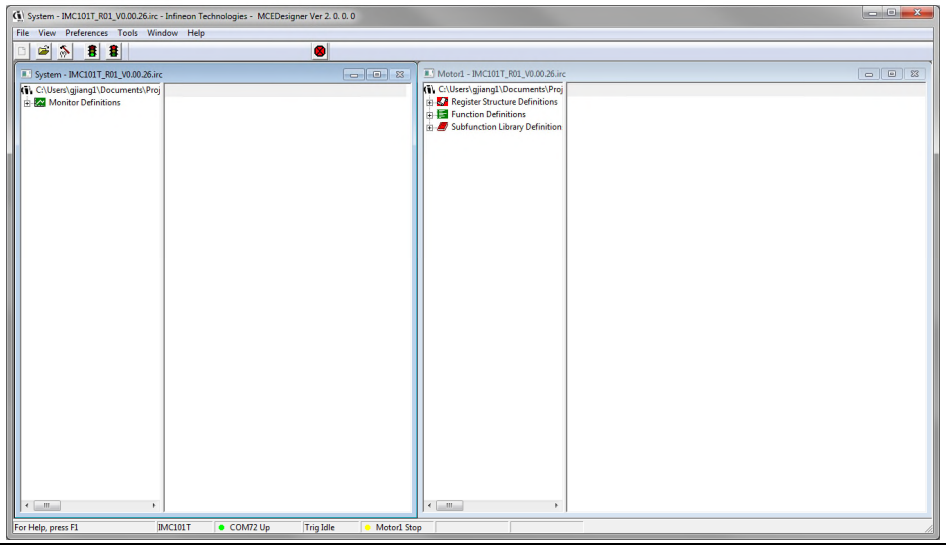

Figure 8 MCEDesigner’s Main Display for EVAL-M1-101T

To program Drive System Parameter file into IMC101T-T038, please click “Tools” menu and select “Programmer” in the pull down list. The pop-up window “Program IMC controller” will show up as in Figure 9. Click on the “Program Parameters” radio button (this is the default option), and then select the Drive System Parameter file created using MCEWizard by clicking on “Browse”. Finally, click on the “Start” button to program the parameter file into the IMC101T-T038 IC.

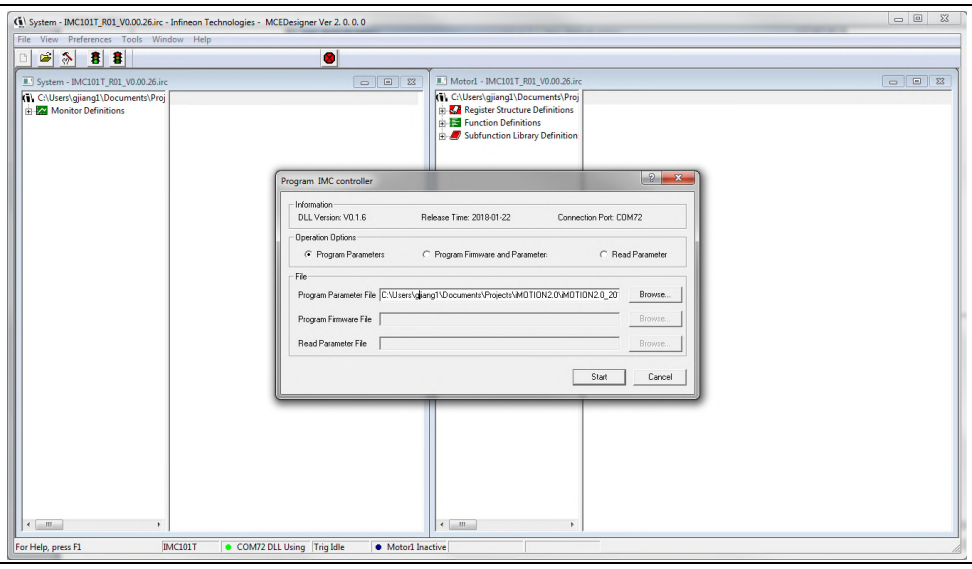

Figure 9 “Program IMC Controller” pop-up window

After Drive System Parameter file has been programmed into IMC101 controller, and the motor drive system is powered, the MCEDesigner can be used to start/stop the motor, display motor current traces, change the motor

speed, modify drive parameters and many other functions. Please refer to the MCEDesigner documentation for more details.

Note: *On-board Debugger portion of EVAL-M1-101T is galvanically isolated from the controller portion and the attached power board. In order to program the parameters or firmware to the IMC101T-T038 controller, the 3.3V DC voltage needs to be supplied to the controller portion of the EVAL-M1-101T. This voltage can either be supplied by the power board (MADK power boards are designed to supply the 3.3V to the control board through M1 or M3 connector) or by feeding the 3.3V DC voltage to the control board through some of the available 3.3V access/test points if the power board is not attached to the EVAL-M1-101T control board.*

To program new firmware and Drive System Parameter into IMC101T-T038, please click “Tools” menu and select “Programmer” in the pull down list. The pop-up window “Program IMC controller” will show up as in Figure 10. Click on the “Program Firmware and Parameter” radio button, and select the Drive System Parameter file created using MCEWizard by clicking on the “Browse” button on the row of “Program Parameter File”, and then select the firmware file by clicking on the “Browse” button on the row of “Program Firmware File”. Finally, click on the “Start” button to program the parameter file into the IMC101T-T038 IC.

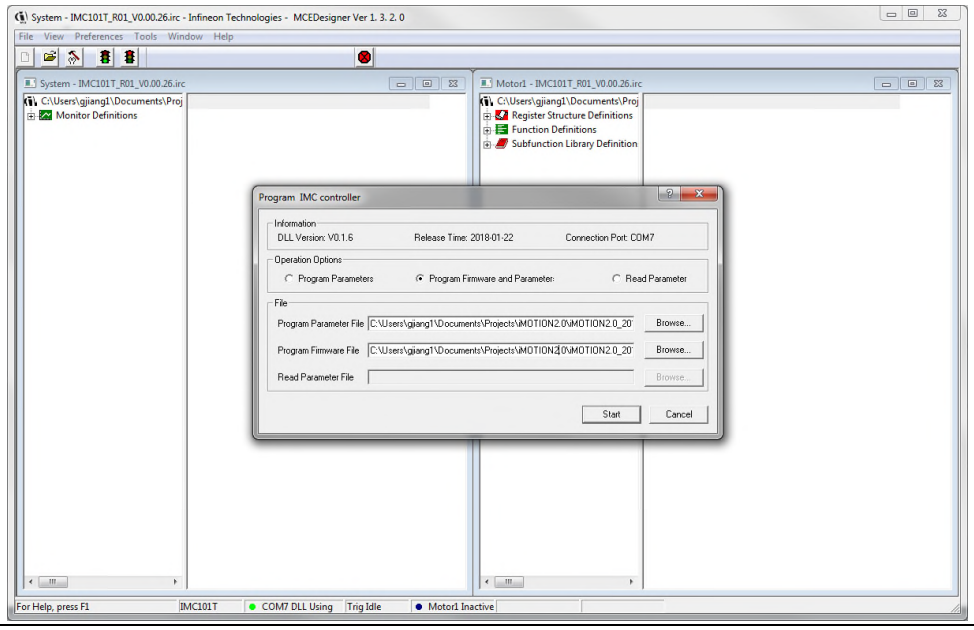

Figure 10 Program Firmware and Parameter in “Program IMC Controller” pop-up window

All the latest firmware files for different types of iMOTION™ motor control ICs are available for download via Infineon iMOTION™ website (http://www.infineon.com/imotion-software).

6 Schematics and Layout

To meet individual customer requirements and make the EVAL-M1-05-65D evaluation board a basis for development or modification, all necessary technical data like schematics, layout and components are included in this chapter.

6.1 DC-Link Voltage Measurement

Pin 14 of connector J3 provides access to the DC-link voltage. Three possible feedback cases are associated with this pin. Figure 11 provides the DC bus sense resistor details.

By default, R14 is not mounted on Eval-M1-05-65D. There must be a pull-down resistor mounted on the corresponding control card.

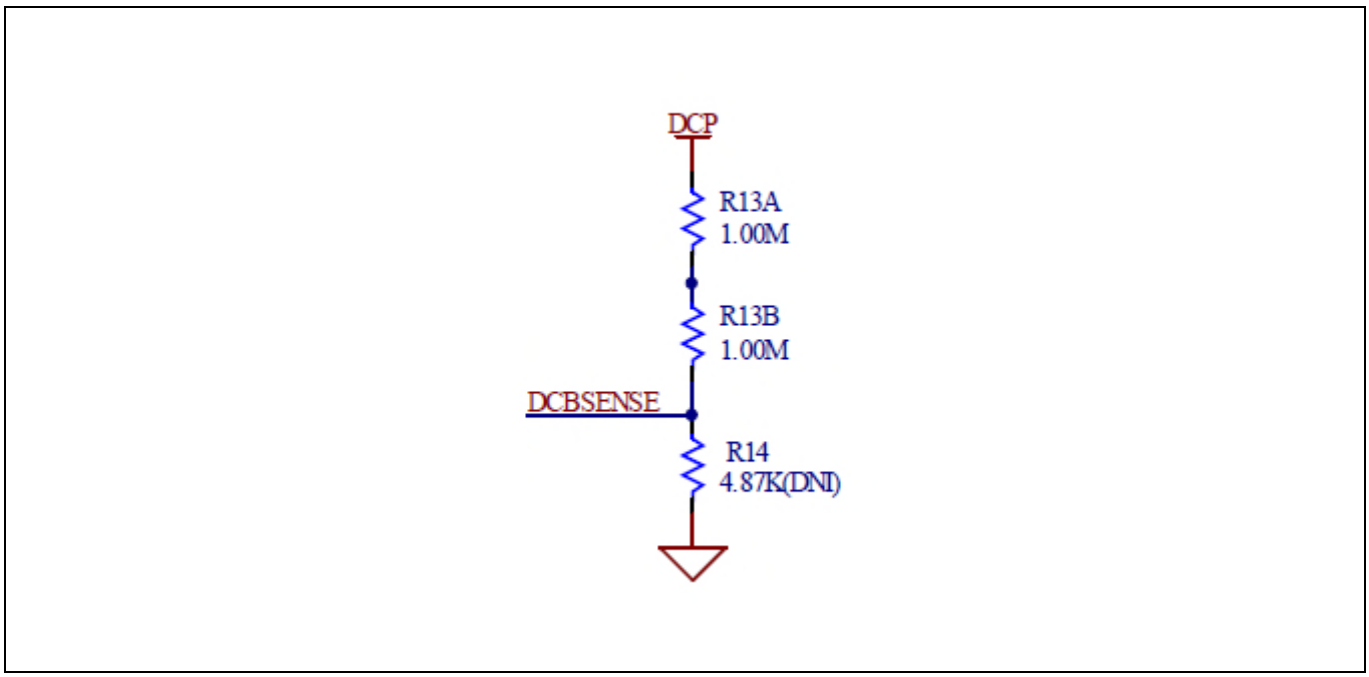

Figure 11 DC bus sense resistor on EVAL-M1-05-65D evaluation board

If a pull down resistor of 4.87 kΩ referred to ground is inserted either on the Eval-M1-05-65D evaluation board or on the control board, the DCBSENSE voltage results in the range of 0 to 3.3 V on the pin reflecting a DC bus voltage range of 0 to 400 V.

If a pull down resistor of 4.87 kΩis inserted on both, Eval-M1-05-65D evaluation board and on the control card, the DCBSENSE results scale to 0-1.65 V. No safety issue occurs.

If no feedback is desired on the DCBSENSE-pin, R13A or R13B should be removed to avoid high voltage on the connector.

6.2 Thermistor Output

This board provides Thermistor/NTC- output on pin 15 of the 20 pin connector J3. Temperatures can be calculated by resistor measurement. Within the CIPOS™ Micro datasheet, thermistor details are listed as summarized in Table 9. There is additional information in the datasheet of IRSM505-65D about how to use the NTC.

Table 9 Internal NTC – Thermistor Characteristics (IRSM505-065 Only)

Symbol	Description	Min	Typ	Max	Units	Conditions
R25	Resistance	-	47	-	kΩ	T_C=25°C, ±5% tolerance
R125	Resistance	-	1.41	-	kΩ	T_C=125°C
B	B-constant (25-50°C)	-	4050	-	K	±2% tolerance
Temperature Range		-40		120	°C	

6.3 EMI input filter and rectifier circuit

Figure 12 depicts the schematic from the AC line input connector J1 to the rectified DC bus voltage. This circuitry includes a passive EMI filter consisting of elements CX1, CX2, L1, CY1 and CY2, a 4 A/600 V rectifier block BR1 and a NTC resistor RT1 for surge current protection. An electrolytic capacitor C1 and two ceramic capacitors C10 and C11 are used for buffering the rectified DC bus voltage DCP. During testing it is advisable to include an external fuse.

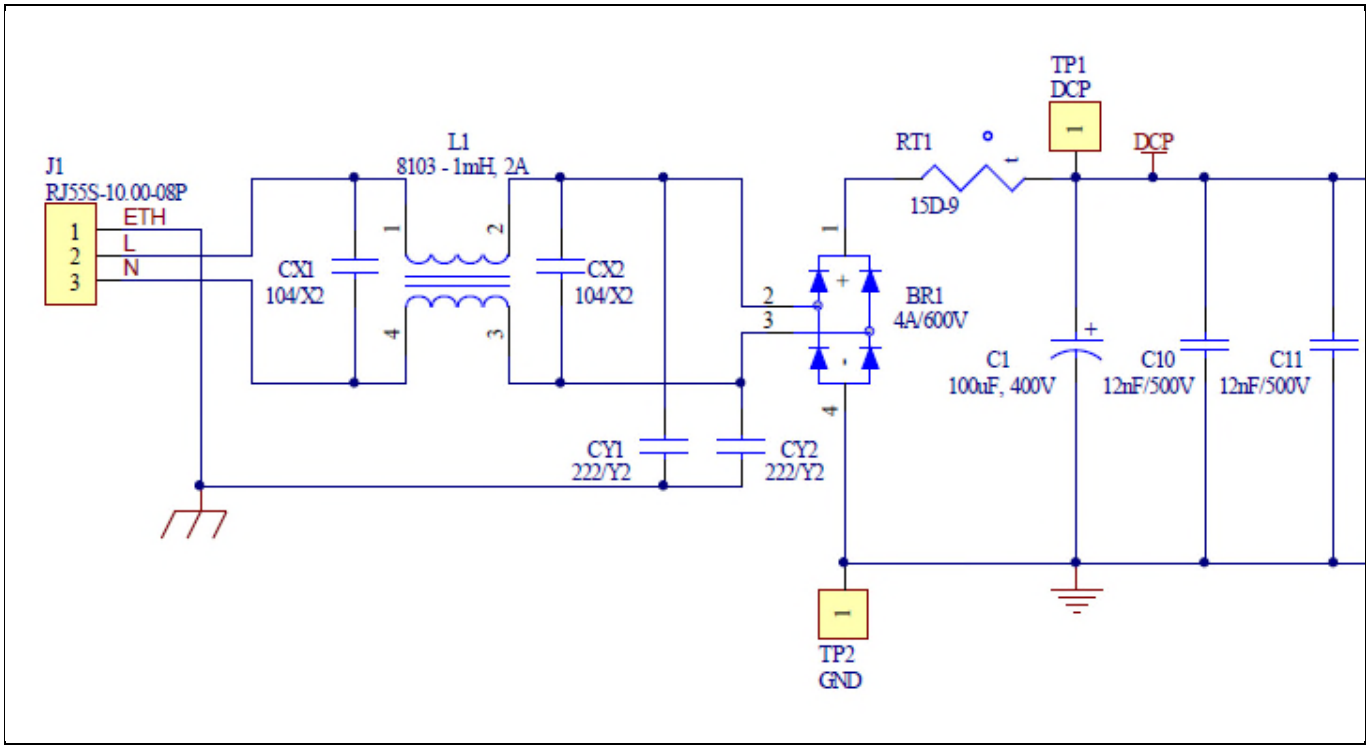

Figure 12 Schematic for EMI input filter and AC/DC section of the EVAL-M1-05-65D evaluation board

6.4 Inverter section using CIPOS™ Micro

The inverter section is implemented using the CIPOS™ Micro IPM as sketched in Figure 13. The module includes six power MOSFETs and three half bridge gate drivers. The shunt resistor section is also given, including the 0Ω resistors R22 to R27. These resistors allow connecting or disconnecting the shunts' signals to connector J3. The three capacitors C29, C31 and C33 are used as bootstrap capacitors to provide the necessary floating supply voltages V_{BS1}, V_{BS2} and V_{BS3} respectively.

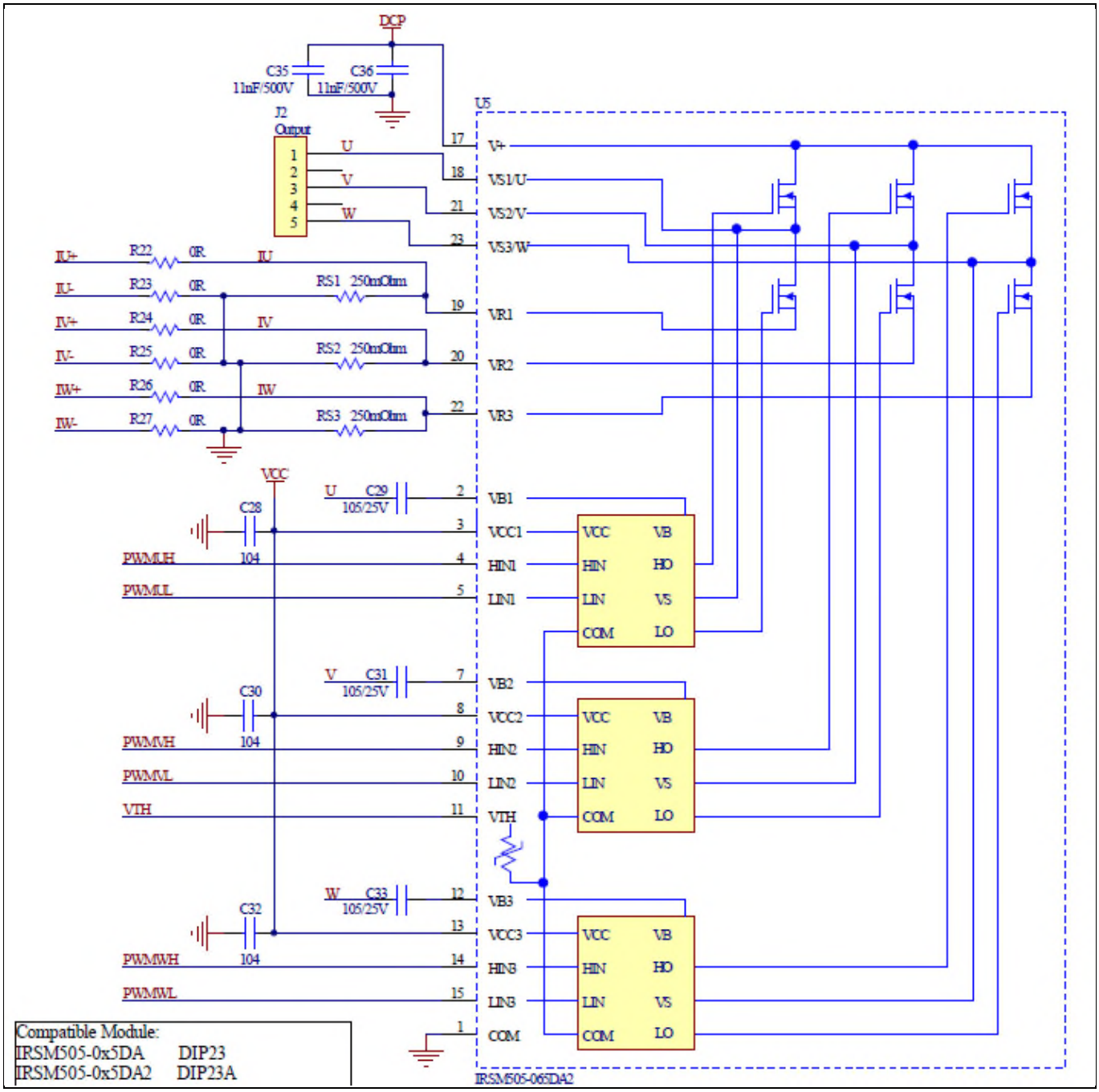

Figure 13 Schematic of the 3-phase inverter section using CIPOS™ Micro on EVAL-M1-05-65D evaluation board

6.5 Power supply

Figure 14 depicts the schematic of the power supply available on the EVAL-M1-05-65D board. The circuit includes a LNK304 that is used to generate 15 V (V_{cc}) directly from the DC bus. V_{CC} is connected to the gate drivers inside the CIPOS™ Micro.

The linear regulator LD1117S33 generates 3.3 V from V_{CC}. The 3.3 V power supply is used in the over current comparator circuit. Led LED1 is used to signal whether the board is powered or not. Both, V_{CC} and 3.3 V are also present on the 20 pin interface connector J3 to power circuitry on the controller board.

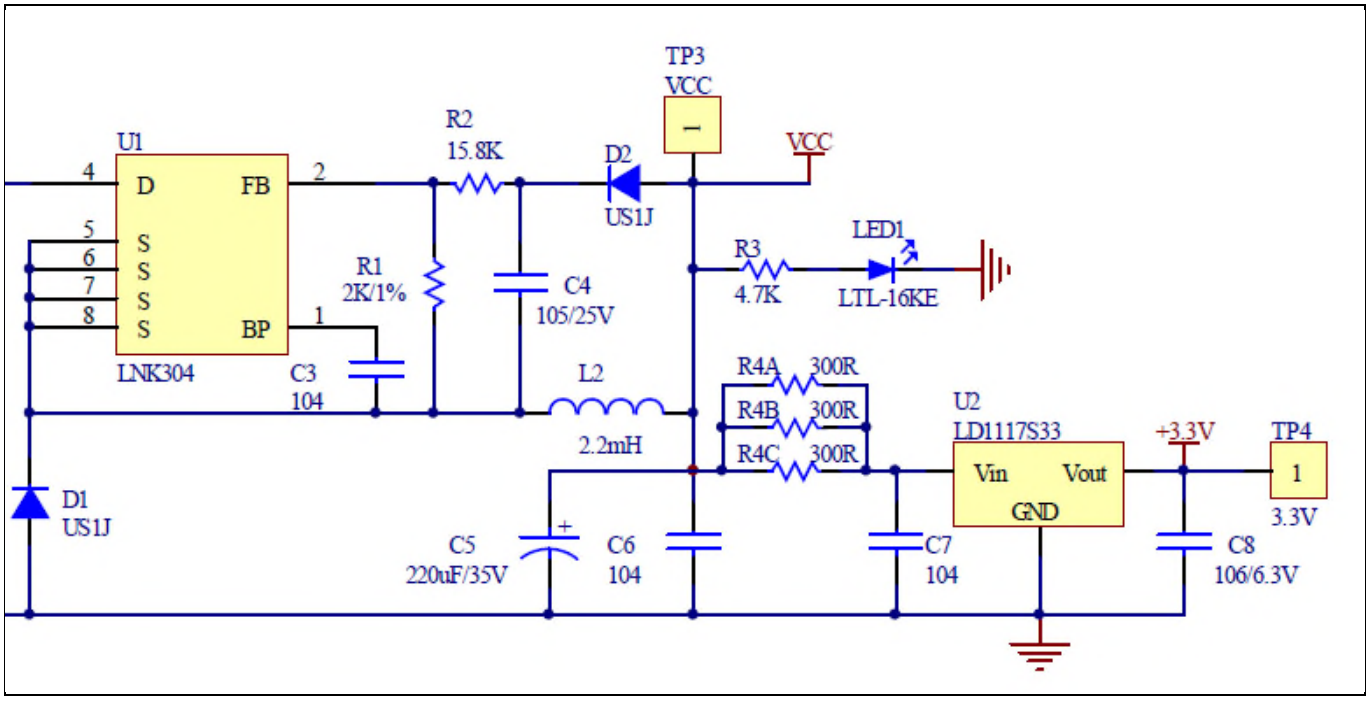

Figure 14 Power supply section of the EVAL-M1-05-65D evaluation board

6.6 Over current circuit

Figure 15 displays the over current protection circuitry. The open collector output GK of the comparator is pulled up to 3.3 V and filtered through resistor R5 and capacitor C13.

The comparator threshold can be set through the voltage divider provided by resistors R6 and R7. By default for emitter shunt trip, R7 is 1kΩ. In single shunt application R7 needs to be changed to 3.48kΩ.

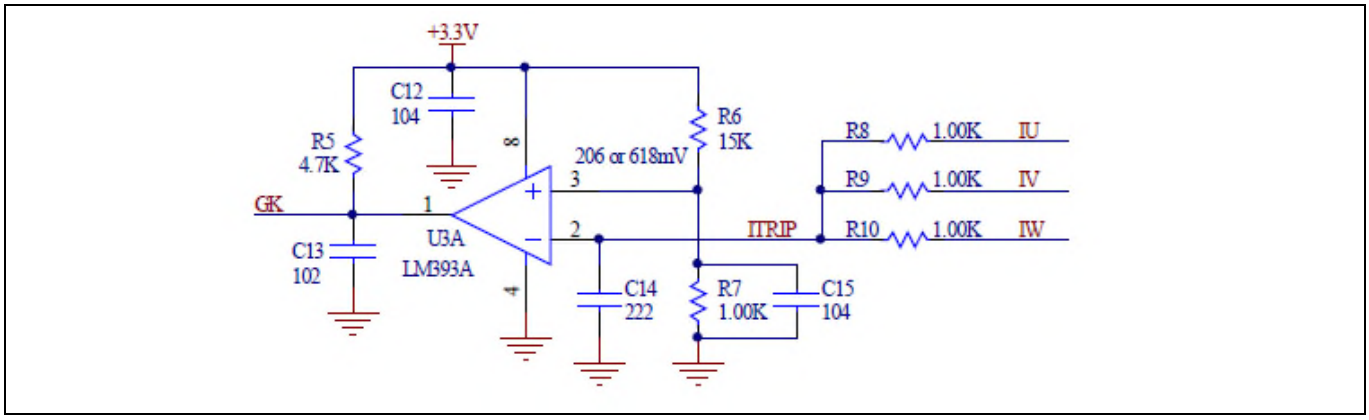

Figure 15 Over current protection circuit on the EVAL-M1-05-65D evaluation board

6.7 Layout

The layout of this board can be used for different voltage or power classes. The power PCB is a two layer PCB. Get in contact with our technical support team to get more detailed information and the latest Gerber-files.

Figure 16 illustrates the top assembly print of the evaluation board.

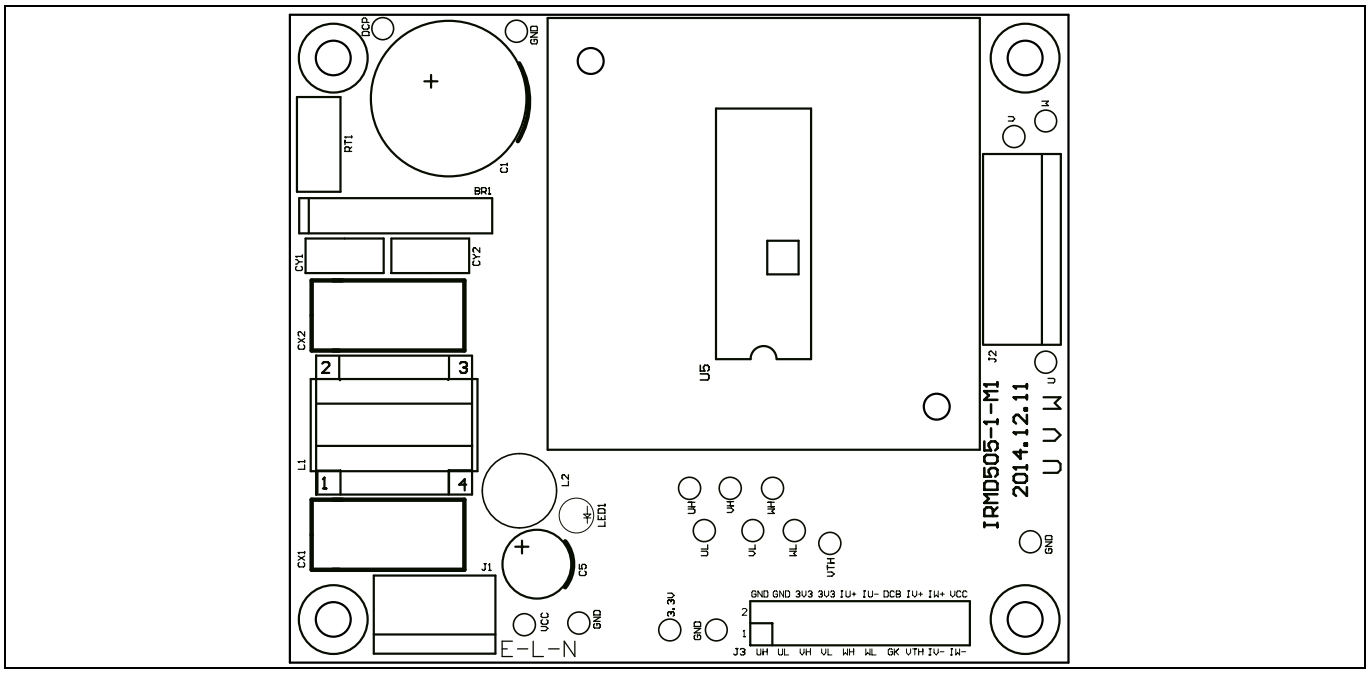

Figure 16 Top assembly print of the EVAL-M1-05-65D evaluation board

Figure 17 depicts the bottom assembly print of the evaluation board.

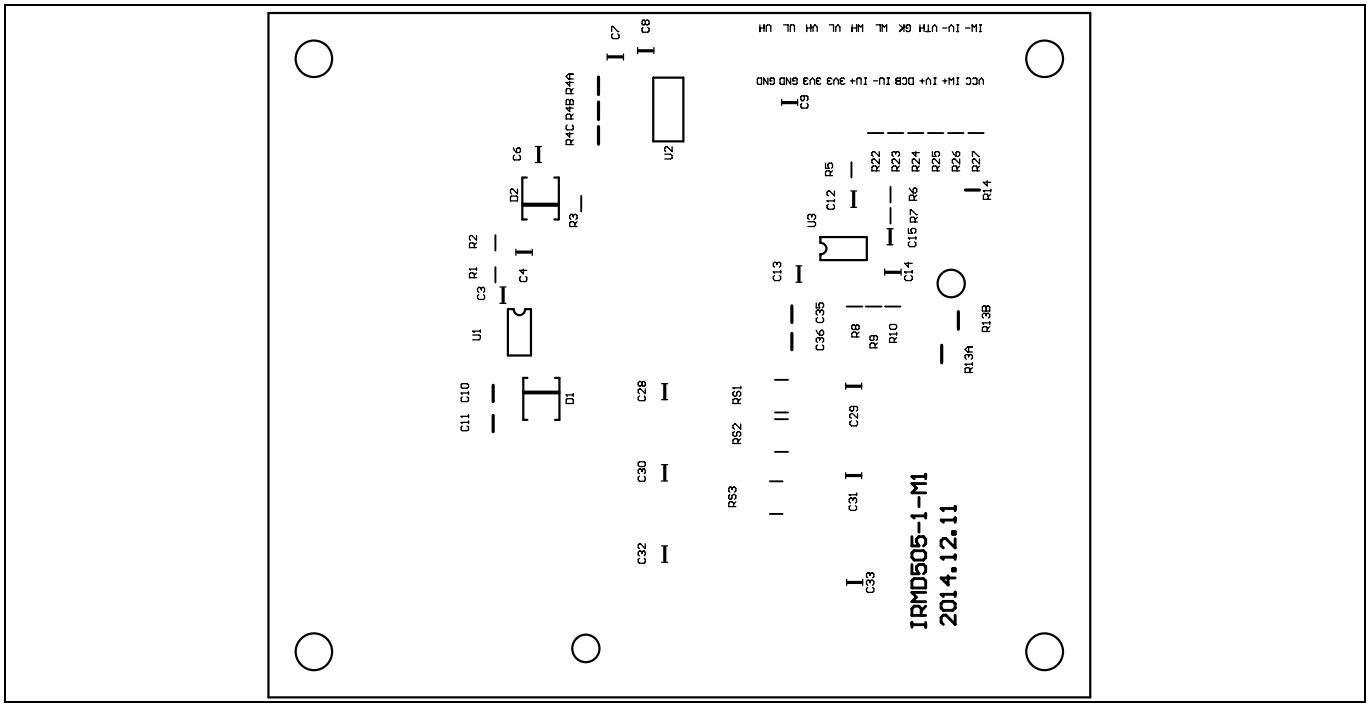

Figure 17 Bottom assembly print of the EVAL-M1-05-65D evaluation board

The top layer of the PCB is provided in Figure 18.

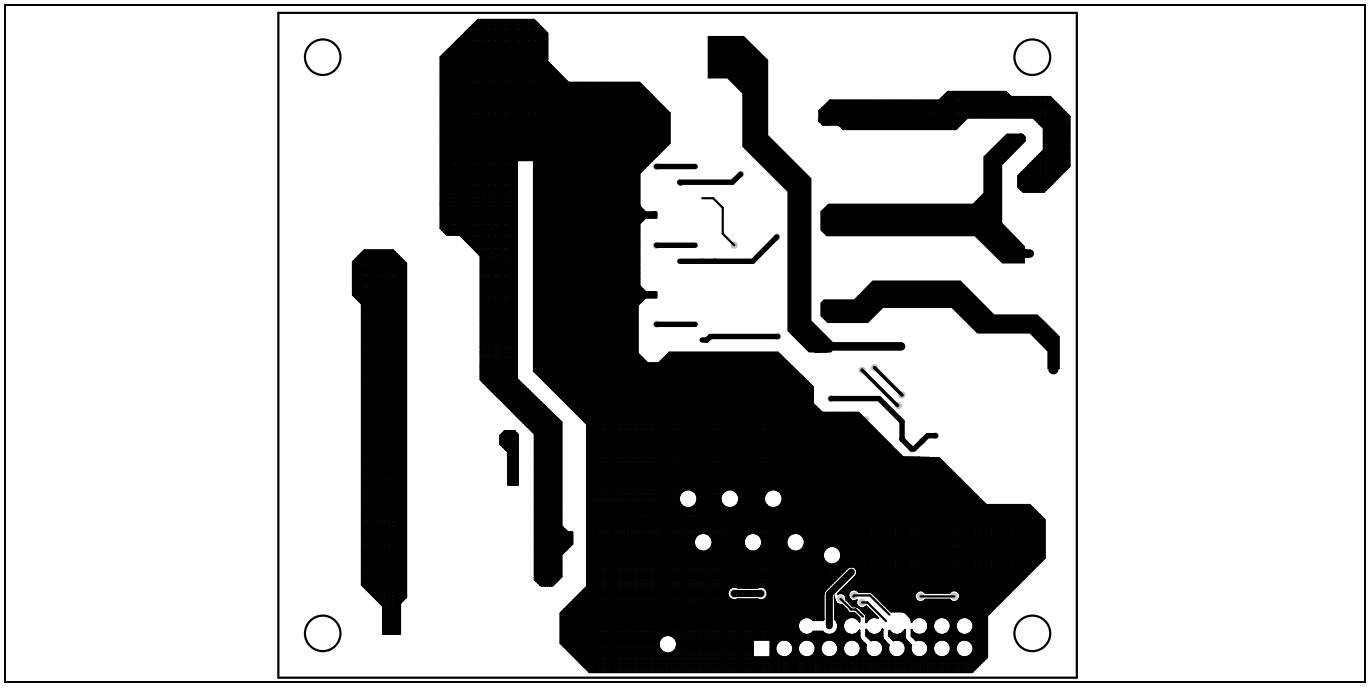

Figure 18 Top layer of the EVAL-M1-05-65D

Figure 19 illustrates the bottom layer routing of the PCB.

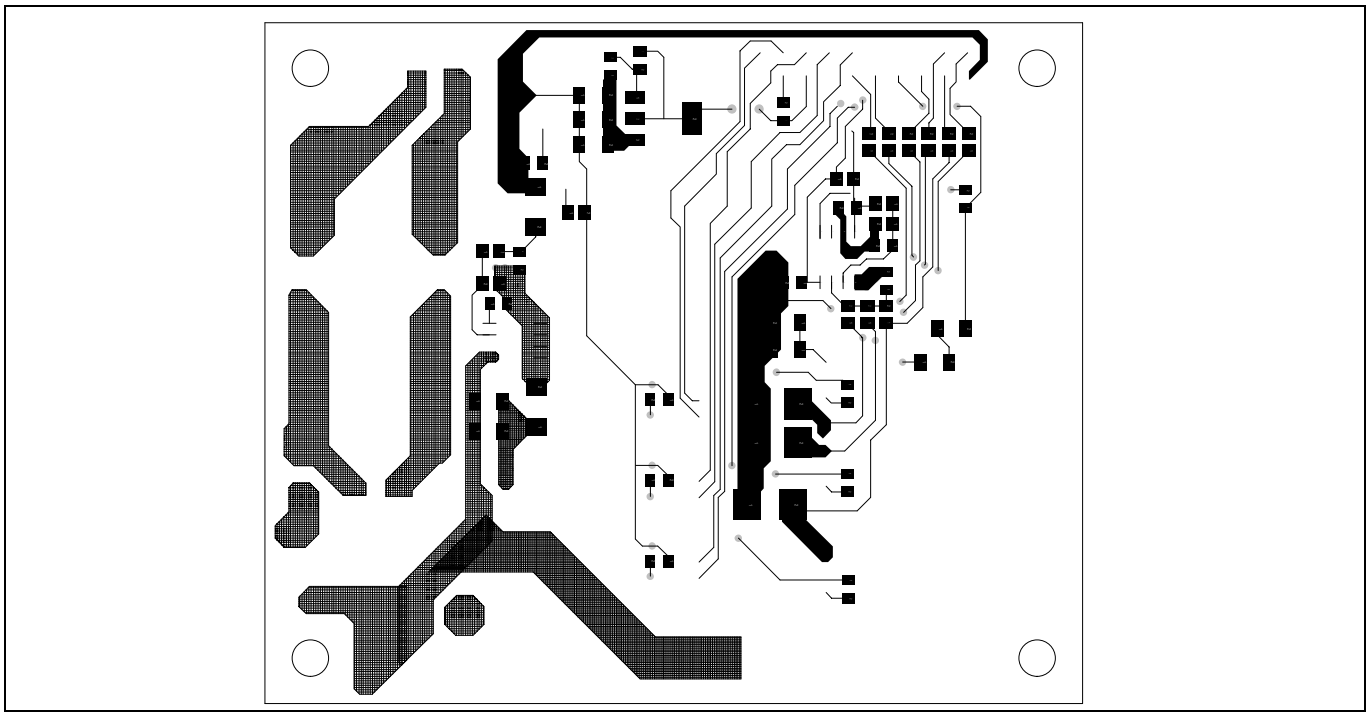

Figure 19 Bottom layer routing of the EVAL-M1-05-65D

7 Bill of Materials of EVAL-M1-05-65D

Table 10 provides the complete bill of materials of the evaluation board.

Table 10 Bill of materials

No	Qty	Part description	Designator	Part number	Manufacturer
1	1	RECT BRIDGE GPP 4A 600V GBU	BR1	GBU406	DIODES INCORPORATED
2	1	CAP ALUM 100µF 20% 400V RADIAL	C1	860021380020	Wurth Electronics Inc.
3	9	CAP CER 0.1µF 50V X7R 0805	C3, C6, C7, C9, C12, C15, C28, C30, C32	885012207098	Wurth Electronics Inc.
4	4	CAP CER 1µF 25V X7R 0805	C4, C29, C31, C33	885012207078	Wurth Electronics Inc.
5	1	CAP ALUM 220µF 20% 35V RADIAL	C5	860020574012	Wurth Electronics Inc.
6	1	CAP CER 10µF 6.3V X5R 0805	C8	885012107004	Wurth Electronics Inc.
7	4	CAP CER 0.012µF 500V X7R 1206	C10, C11, C35, C36	1206J5000123MDR	Knowles Syfer
8	1	CAP CER 1000pF 50V C0G/NP0 0805	C13	885012007063	Wurth Electronics Inc.
9	1	CAP CER 2200pF 50V C0G/NP0 0805	C14	885012007065	Wurth Electronics Inc.
10	1	CAP FILM 0.1UF 10% 275VAC RADIAL	CX1, CX2	890324025017CS	Wurth Electronics Inc.
11	2	CAP CER 2200pF 250VAC RADIAL	CY1, CY2	DE2E3KY222MN3AM02F	MURATA ELECTRONICS
12	2	Diode Standard 600V 1A Surface Mount SMA	D1, D2	US1J-13-F	Diodes Incorporated
13	1	SERIE 2165S - 5.08 MM - HORIZONTAL CABLE ENTRY WITH RISING CAGE CLAMP - WR-TBL	J1	691216510003S	Wurth Electronics Inc.
14	1	SERIE 2169 - 7.50 MM - HORIZONTAL CABLE ENTRY WITH RISING CAGE CLAMP - WR-TBL	J2	691216910003	Wurth Electronics Inc.
15	1	2.54MM ANGLED DUAL SOCKET HEADER	J3	613020243121	Wurth Electronics Inc.
16	1	8103-RC	L1	JWMILLER_8103	Bourns, Inc.
17	1	FIXED IND 2.2mH THROUGH HOLE	L2	RLB0914-222KL	Bourns Inc.

18	1	LED RED CLEAR ROUND T/H	LED1	151034RS03000	Wurth Electronics Inc.
19	1	RES SMD 2 kΩ 1% 1/8W 0805	R1	RC0805FR-072KL	Yageo
20	1	RES SMD 15.8 Ω 1% 1/8W 0805	R2	RC0805FR-0715R8L	Yageo
21	2	RES SMD 4.7 kΩ 1% 1/8W 0805	R3, R5	RC0805FR-074K7L	Yageo
22	3	RES SMD 300 Ω 5% 1/4W 1206	R4A, R4B, R4C	RC1206JR-07300RL	Yageo
23	1	RES SMD 15 kΩ 0.1% 1/8W 0805	R6	RT0805BRD0715KL	Yageo
24	4	RES SMD 1 kΩ1% 1/8W 0805	R7, R8, R9, R10	RC0805FR-071KL	Yageo
25	2	RES SMD 1 M Ω 1% 1/4W 1206	R13A, R13B	RV1206FR-071ML	Yageo
26	1	RES SMD 4.87 kΩ 1% 1/8W 0805	R14 (DNP)	RC0805FR-074K87L	Yageo
27	6	RES SMD 0 Ω JUMPER 1/8W 0805	R22, R23, R24, R25, R26, R27	RC0805JR-070RP	Yageo
28	3	RES 0.25 Ω 1% 3/4W 2010	RS1, RS2, RS3	PT2010FK-070R25L	Yageo
29	1	NTC 15Ω 9MM DIA	RT1	NTC15D-9	SHIN-HANG
30	17	TEST POINT PC MINI .040"D WHITE	TP1,'TP2, TP22, TP23, TP24,TP3,TP4,TP7,TP13,TP14,TP15,TP16,TP17,TP18,TP19,TP20,TP21	5002	KEYSTONE ELECTRONICS
31	1	IC OFFLINE SWITCHER	U1	LNK304DN-TL	POWER INTEGRATIONS
32	1	IC REG LINEAR 3.3V 1A SOT223-4	U2	IFX1117MEV33HTMA1	Infineon Technologies
33	1	IC DUAL DIFF COMPARATOR 8-SOIC	U3	LM393ADR	Texas Instruments
34	1	IC MOTOR DRIVER 500V DIP 23	U5	IRSM515-065DA2 / IRSM505-065DA2	Infineon Technologies

8 Reference

[1] Datasheet of Infineon IPM IRSM505-065, is available for download on Infineon's website

[2] Application Note AN2009-10 Using the NTC inside a power electronic module, is available for download on Infineon's website

[3] EVAL-M1-101T User Manual is available for download on Infineon's website

[4] EVAL-M1-183M User Manual is available for download on Infineon's website

Note: All listed reference materials are available for download on Infineon's website www.infineon.com/. All the iMOTION MADK evaluation board's User Manuals are available at www.infineon.com/MADK

Revision History

Major changes since the last revision

Version number	Revision Date	Revision description
2.0	2017-03-20	Second release
2.1	2018-07-09	Update BOM. Add WE Part Number, and add Getting Started with EVAL-M1-05-65D

Trademarks of Infineon Technologies AG
µHVIC™, µIPM™, µPFC™, AU-ConvertIR™, AURIX™, C166™, CanPAK™, CIPOS™, CIPURSE™, CoolDP™, CoolGaN™, COOLiR™, CoolMOS™, CoolSET™, CoolSiC™, DAVE™, DI-POL™, DirectFET™, DrBlade™, EasyPIM™, EconoBRIDGE™, EconoDUAL™, EconoPACK™, EconoPIM™, EiceDRIVER™, eupec™, FCOS™, GaNpowIR™, HEXFET™, HITFET™, HybridPACK™, iMOTION™, IRAM™, ISOFACE™, IsoPACK™, LEDrivIR™, LITIX™, µIPM™, MIPAQ™, ModSTACK™, my-d™, NovalithIC™, OPTIGA™, OptiMOS™, ORIGA™, PowIRaudio™, PowIRStage™, PrimePACK™, PrimeSTACK™, PROFET™, PRO-SIL™, RASIC™, REAL3™, SmartLEWIS™, SOLID FLASH™, SPOC™, StrongIRFET™, SupIRBuck™, TEMPFET™, TRENCHSTOP™, TriCore™, UHVIC™, XHP™, XMC™

Trademarks updated November 2015

Other Trademarks
All referenced product or service names and trademarks are the property of their respective owners.

Edition 2018-07-09

Published by

Infineon Technologies AG

81726 Munich, Germany

© 2018 Infineon Technologies AG. All Rights Reserved.

Do you have a question about this document?

Email: erratum@infineon.com

Document reference
AN2016-24 EVAL-M1-05-65D User Manual

IMPORTANT NOTICE
The information contained in this application note is given as a hint for the implementation of the product only and shall in no event be regarded as a description or warranty of a certain functionality, condition or quality of the product. Before implementation of the product, the recipient of this application note must verify any function and other technical information given herein in the real application. Infineon Technologies hereby disclaims any and all warranties and liabilities of any kind (including without limitation warranties of non-infringement of intellectual property rights of any third party) with respect to any and all information given in this application note.

The data contained in this document is exclusively intended for technically trained staff. It is the responsibility of customer's technical departments to evaluate the suitability of the product for the intended application and the completeness of the product information given in this document with respect to such application.

For further information on the product, technology delivery terms and conditions and prices please contact your nearest Infineon Technologies office (**www.infineon.com**).

Please note that this product is not qualified according to the AEC Q100 or AEC Q101 documents of the Automotive Electronics Council.

WARNINGS
Due to technical requirements products may contain dangerous substances. For information on the types in question please contact your nearest Infineon Technologies office.

Except as otherwise explicitly approved by Infineon Technologies in a written document signed by authorized representatives of Infineon Technologies, Infineon Technologies' products may not be used in any applications where a failure of the product or any consequences of the use thereof can reasonably be expected to result in personal injury.