Astrodyne

65W Triple Output Switching Power Supply

PT65 series



- Universal AC input
- Low leakage current ≤ 0.5mA
- Protections: Short circuit / Overload / Over voltage
- Fixed switching frequency at 65KHz
- Cooling by free air convection

Model Number	Output Volts	Output Amps	Ripple & Noise	Line Reg	Load Reg	Efficiency	Volt Tolerance	Min Load
TRIPLE OUTPUT								
PT-65A	5 Volts(DC)	5.5 Amps	50mVpk-pk	±1.0%	±3.0%	76%	±4.0%	0.4~7Amps
	12 Volts(DC)	2.5 Amps	120mVpk-pk	±2.0%	±4.0%	76%	±7.0%	0.2~3.2Amps
	-5 Volts(DC)	0.5 Amps	50mVpk-pk	±1.0%	±1.0%	76%	±5.0%	0~0.7Amps
PT-65B	5 Volts(DC)	5.5 Amps	50mVpk-pk	±1.0%	±3.0%	77%	±4.0%	0.4~7Amps
	12 Volts(DC)	2.5 Amps	120mVpk-pk	±2.0%	±4.0%	77%	±7.0%	0.2~3.2Amps
	-12 Volts(DC)	0.5 Amps	100mVpk-pk	±1.0%	±1.0%	77%	±5.0%	0~0.7Amps
PT-65C	5 Volts(DC)	5.5Amps	50mVpk-pk	±1.0%	±3.0%	77%	±4.0%	0.4~7Amps
	15 Volts(DC)	2.0 Amps	120mVpk-pk	±2.0%	±4.0%	77%	±7.0%	0.2~2.6Amps
	-15 Volts(DC)	0.5 Amps	100mVpk-pk	±1.0%	±1.0%	77%	±5.0%	0~0.7Amps
PT-65D	5 Volts(DC)	4.0 Amps	50mVpk-pk	±1.0%	±2.0%	79%	±4.0%	0.5~5Amps
	12 Volts(DC)	2.0 Amps	120mVpk-pk	±2.0%	±5.0%	79%	±6.0%	0.2~4.0Amps
	24 Volts(DC)	1.0 Amps	200mVpk-pk	±3.0%	±5.0%	79%	±6.0%	0.2~1.3Amps
PT-6503	3.3 Volts(DC)	6.0 Amps	50mVpk-pk	±1.0%	±3.0%	72%	±3.0%	0~7.0Amps
	5 Volts(DC)	6.0 Amps	50mVpk-pk	±1.0%	±3.0%	72%	+4,-2.0%	0.2~10Amps
	12 Volts(DC)	1.0 Amps	100mVpk-pk	±2.0%	±8.0%	72%	±8.0%	0~1.2Amps

Astrodyne

65W Triple Output Switching Power Supply

PT65 series

INPUT SPECIFICATIONS

Input Voltage Range	90-264VAC / 127-370 Volts(DC)
Frequency Range	47-440 Hz: PT-65A/B/C/D
	47~63Hz: PT6503
Inrush Current, typ: (cold start)	20 Amps @ 115VAC
	40Amps @ 230VAC
Input Current	
PT-65A/B/C/D	1.5Amps max @115VAC
PT-6503	1.8Amps max @115VAC
PT-65A/B/C/D/03	0.7 Amps max @ 230VAC
Leakage current	
PT-65A/B/C/D	< 0.5mAmps
PT-6503	< 1mAmps /240VAC

OUTPUT SPECIFICATIONS

Voltage and Current	See Selection Chart
Line Regulation	See Selection Chart
Load Regulation	See Selection Chart
Voltage Tolerance (Note 2)	See Selection Chart
Ripple/Noise (Note 1)	See Selection Chart
Hold Up Time @ FL	60mS
Setup, Rise Time @ FL	800mS, 20mS PT-65A/B/C/D
	800mS, 50mS PT-6503
Over Voltage Protection	5Volts(DC) only: 5.75~6.75Volts(DC)
	Hiccup mode, auto recover
Over Current Protection	Hiccup mode, auto recover
PT-65A/B/C	73~95W rated output power
PT-65D	74.8~98.6W rated output power
PT-6503	120-160% rated output power
DC Voltage Adjust	4.75~5.5Volts(DC):PT-65A/B/C/D(5V)
	3~3.6Volts(DC): PT-6503(3.3Volts)

GENERAL SPECIFICATIONS

Safety	UL60950-1 (PT-65A/B/C/D)
	UL1950 (only PT-65003)
	TUV EN60950-1 Approved
Insulation Resistance	≥ 100MΩ / 500Volts(DC)
EMI	Compliance to EN55022 (CISPR22)
	Class B
Harmonic Current	Compliance to EN61000-3-2,-3
Efficiency	See Selection Chart
Isolation	
	3000VAC Input - Output
	1500VAC Input - Ground
	500VAC Output - Ground 1min
EMS	Compliance to
	EN61000-4-2,3,4,5,6,8,11;
	ENV50204, EN55024
	light inustry level, criteria A

ENVIRONMENTAL SPECIFICATIONS

Oper. Temperature	-10°C to +60°C (See Derate Curve)
Storage Temperature	-20°C to +85°C, 10~95% RH
Relative Humidity	20 to +90% RH
Temperature Coefficient	
PT-65A/B/C/D	±0.04% / °C (0-50°C) on +5Volts output
PT-6503	±0.03% / °C (0-50°C)
MTBF	
PT-65A/B/C/D	277.2K Hrs min, MIL-HDBK-217F (25°C)
PT-6503	222K Hrs min, MIL-HDBK-217F (25°C)
Vibration	10~500Hz, 2G10min./1cycle, period for 60min. each along X, Y, Z axes

PHYSICAL SPECIFICATIONS

Size		
	Millimeters	127 x 76.2 x 42
	Inches	5” x 3” x 1.6”
Weight		
	PT-65A/B/C/D	8.82 oz (250g)
	PT-6503	9.87 oz (280g)

NOTE

1. Ripple and Noise are measured at 20MHz of bandwidth by using a 12” twisted pair-wire terminated with a 0.1uf & 47 uf parallel capacitor.
2. Tolerance: includes set up tolerance, line regulation and load regulation.
3. Mounting holes M1 and M2 should be grounded for EMI purposes.

All specifications are typical at nominal input, full load, and 25°C unless otherwise noted

PT-65A,B,C,D MECHANICAL SPECIFICATION AND BLOCK DIAGRAM

■ Mechanical Specification

Unit:mm

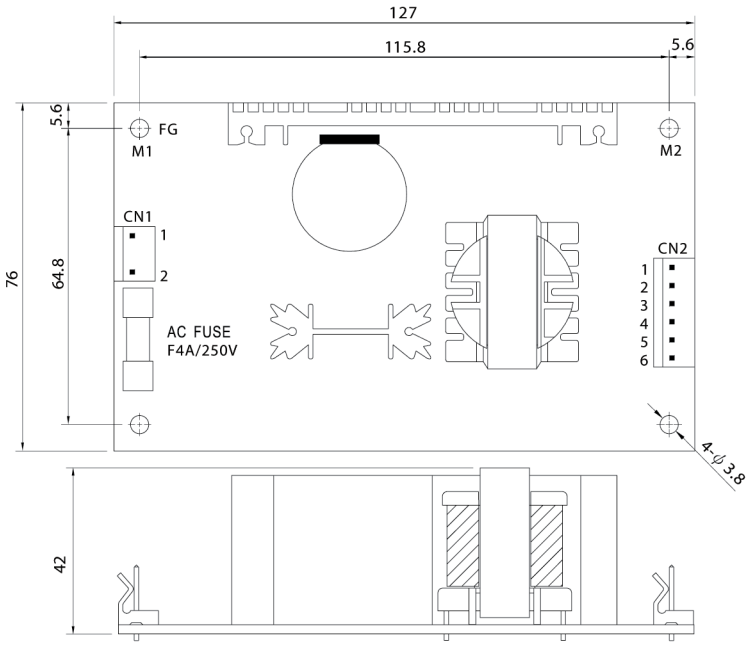

AC Input Connector (CN1) : Molex 5277-02 or equivalent

Pin No.	Assignment	Mating Housing	Terminal
1	AC/N	Molex 5195 or equivalent	Molex 5194 or equivalent
2	AC/L		

DC Output Connector (CN2) : Molex 5273-06 or equivalent

Pin No.	Assignment	Mating Housing	Terminal
1	V2	Molex 5195 or equivalent	Molex 5194 or equivalent
2,3	+5V		
4,5	COM		
6	V3		

※PIN2:+5V PIN3,4,5:COM only for PT-65D

■ Block Diagram

fosc : 65KHz

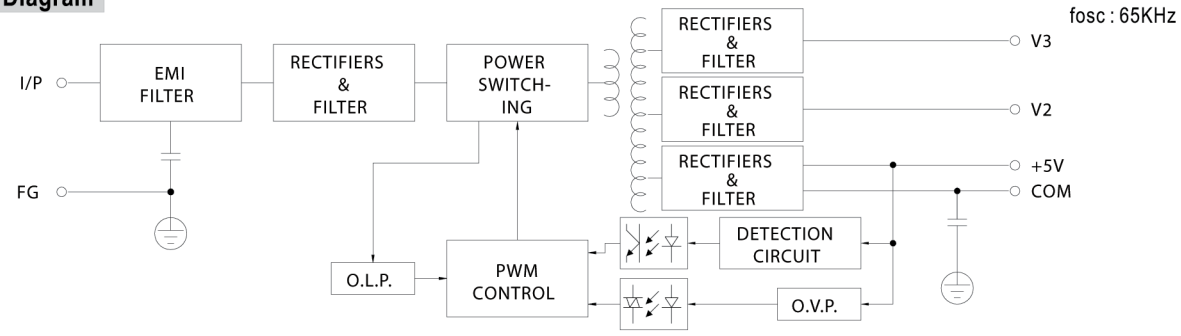

PT-6503 MECHANICAL SPECIFICATION AND BLOCK DIAGRAM

■ Mechanical Specification

Unit:mm

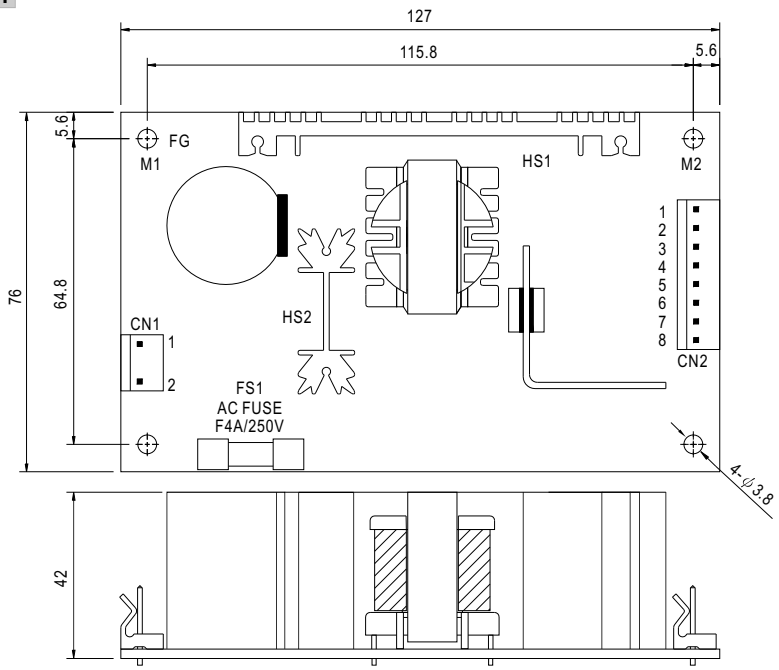

AC Input Connector (CN1) : Molex 5277-02 or equivalent

Pin No.	Assignment	Mating Housing	Terminal
1	AC/N	Molex 5195 or equivalent	Molex 5194 or equivalent
2	AC/L		

⚠ HS1,HS2 can not be shorted

DC Output Connector (CN2) : Molex 5273-08 or equivalent

Pin No.	Assignment	Mating Housing	Terminal
1,2	+5V	Molex 5195 or equivalent	Molex 5194 or equivalent
3,4,5	COM		
6	+V		
7,8	+3.3V		

■ Block Diagram

fosc : 65KHz

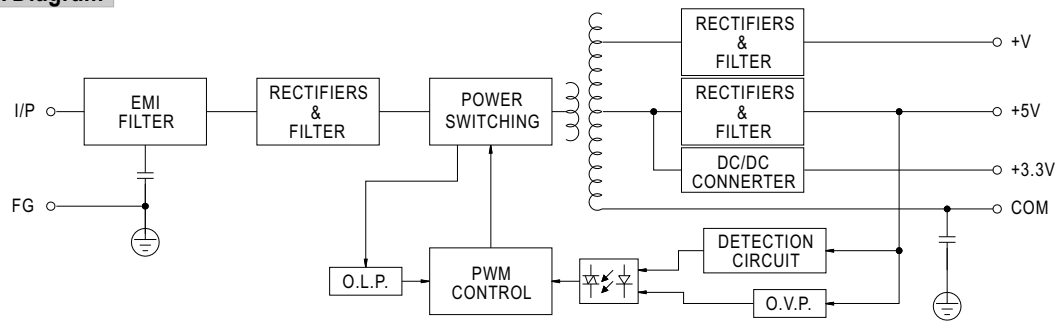

PT-65A,B,C,D CURVES

■ Derating Curve

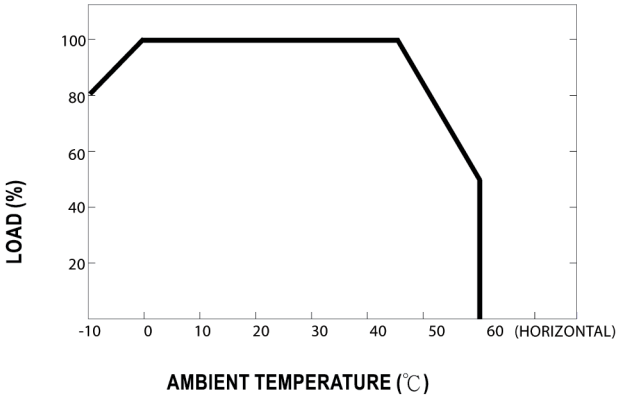

■ Static Characteristics (B)

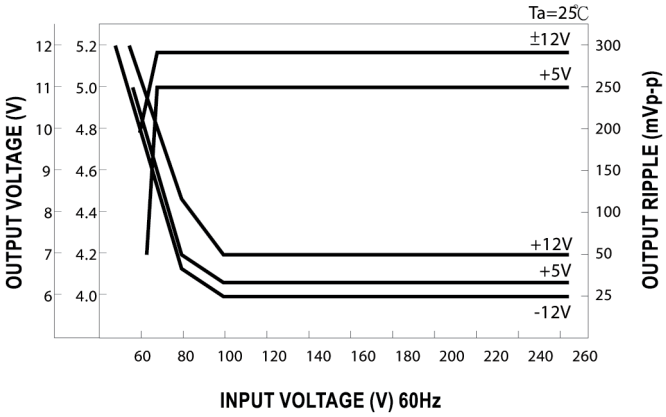

PT-6503 CURVES

■ Derating Curve

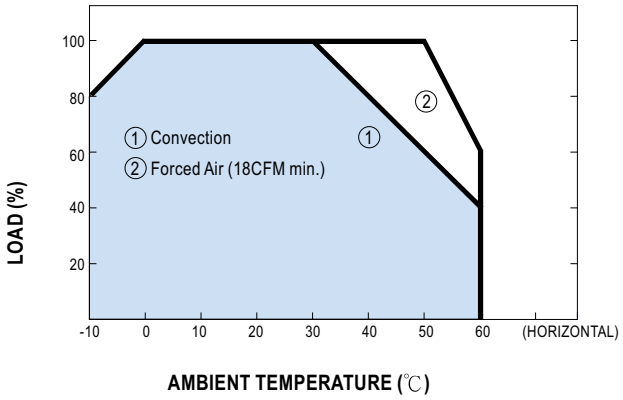

■ Static Characteristics

