Safety relays - PSR-SPP-24DC/MXF1/4X1/2X2/B - 2902726

Please be informed that the data shown in this PDF Document is generated from our Online Catalog. Please find the complete data in the user's documentation. Our General Terms of Use for Downloads are valid (http://phoenixcontact.com/download)



Multifunctional safety relay for emergency stop and safety doors up to SIL 3, Cat. 4, PL e, automatically or manually monitored activation, 4 N/O contacts, 3 safety functions, 2 shutdown levels, plug-in spring-cage terminal block

Why buy this product

- Up to Cat.4/PL e according to EN ISO 13849-1, SILCL 3 according to EN 62061, SIL 3 according to IEC 61508
- 3 safety functions in one device
- Low housing width of only 22.5mm
- No software configuration required
- Also available with push-in connection

Key Commercial Data

Packing unit	1 STK
GTIN	4 046356 673013
GTIN	4046356673013

Technical data

Note

Utilization restriction	EMC: class A product, see manufacturer's declaration in the download area

Dimensions

Width	22.5 mm
Height	117.4 mm
Depth	114.5 mm

Ambient conditions

Ambient temperature (operation)	-20 °C ... 45 °C (see derating curve)
Ambient temperature (storage/transport)	-25 °C ... 85 °C
Max. permissible relative humidity (operation)	75 % (on average, 85% infrequently, non-condensing)

Safety relays - PSR-SPP-24DC/MXF1/4X1/2X2/B - 2902726

Technical data

Ambient conditions

Max. permissible humidity (storage/transport)	75 % (on average, 85% infrequently, non-condensing)
Maximum altitude	≤ 2000 m (Above sea level)

Input data

Nominal input voltage U_N	24 V DC
Input voltage range in reference to U_N	0.85 ... 1.1
Typical input current at U_N	125 mA (with actuated relays)
	55 mA (Two-channel 24 V/0 V + max. 200 mA control (message outputs 32/62) with non-actuated relays)
Current consumption	typ. 5 mA (I_{max}/I_x inputs)
	20 mA (in electric torque)
Voltage at input/start and feedback circuit	24 V -15 %; +10 % (first channel: 24 V; second channel: 0 V)
Typical response time	175 ms (monitored/manual start)
	250 ms (automatic start)
Typ. starting time with U_s	250 ms (when controlled via A1)
Typical release time	25 ms (when controlled via S11/I1,I3,I5 and S21/I2,I4,I6)
	20 ms (when controlled via A1)
Concurrence input 1/2	∞
Recovery time	1 s (Availability time after activation of sensor circuit: 100ms)
Operating voltage display	1 x green LED
Status display	5 green LEDs
Protective circuit	Surge protection Suppressor diode
Maximum switching frequency	0.5 Hz
Max. permissible overall conductor resistance	100 Ω
Filter time	max. 1.5 ms (Test pulse duration; for all equivalent inputs)
	min. 7.5 ms (Test pulse rate; for all equivalent inputs)

Output data

Contact type	4 enabling current paths
	2 semiconductor alarm outputs
Contact material	AgCuNi, +0,2 -0,4 µm Au
Maximum switching voltage	250 V AC/DC
Minimum switching voltage	10 V AC/DC
Limiting continuous current	6 A (N/O contact)
	max. 100 mA (Alarm output (24 V DC))
Maximum inrush current	6 A
Inrush current, minimum	10 mA
Sq. Total current	72 A^2 ($I_{TH}^2 = I_1^2 + I_2^2 + I_3^2 + I_4^2$)
Interrupting rating (ohmic load) max.	1500 VA (250 V AC, τ = 0 ms)
	66 W (220 V DC, τ = 0 ms)
	66 W (110 V DC, τ = 0 ms)
	100 W (48 V DC, τ = 0 ms)

Safety relays - PSR-SPP-24DC/MXF1/4X1/2X2/B - 2902726

Technical data

Output data

	144 W (24 V DC, τ = 0 ms)
Maximum interrupting rating (inductive load)	48 W (24 V DC, τ = 40 ms)
	43 W (48 V DC, τ = 40 ms)
Switching capacity min.	0.1 W
Mechanical service life	10x 10^6 cycles
Switching capacity (360/h cycles)	5 A (0,1 Hz; DC13; 24 V)
Output fuse	6 A gL/gG NEOZED (N/O contact)
	4 A gL/gG NEOZED (for low-demand applications)

General

Relay type	Electromechanical relay with forcibly guided contacts in accordance with EN 50205
Nominal operating mode	100% operating factor
Net weight	26.1 g
Mounting position	vertical or horizontal
Mounting type	DIN rail mounting
Assembly instructions	See derating curve
Degree of protection	IP20
Min. degree of protection of inst. location	IP54
Housing color	yellow

Connection data

Connection method	Spring-cage connection
pluggable	Yes
Conductor cross section solid min.	0.2 mm²
Conductor cross section solid max.	1.5 mm²
Conductor cross section flexible min.	0.2 mm²
Conductor cross section flexible max.	1.5 mm²
Conductor cross section AWG min.	24
Conductor cross section AWG max.	16
Stripping length	8 mm

Safety-related characteristic data

Stop category	0
Safety Integrity Level (SIL)	3
	3
Designation	EN ISO 13849
Performance level (PL)	e (5 A DC13; 3 A AC15; 8760 cycles/year)
Category	4
Safety Integrity Level Claim Limit (SIL CL)	3
Designation	EN 50156
Safety Integrity Level (SIL)	3

Safety relays - PSR-SPP-24DC/MXF1/4X1/2X2/B - 2902726

Technical data

Standards and Regulations

Designation	Air clearances and creepage distances between the power circuits
Standards/regulations	DIN EN 50178/VDE 0160
Rated insulation voltage	250 V AC
Rated surge voltage/insulation	4 kV/basic isolation (safe isolation, reinforced insulation and 6 kV between input circuit, enabling current paths and safety circuit 1 (13/14, 23/24) and safety circuit 2 (43/44, 53/54).)
Degree of pollution	2
Overvoltage category	III

Environmental Product Compliance

China RoHS	Environmentally friendly use period: unlimited = EFUP-e
	No hazardous substances above threshold values

Drawings

Circuit diagram

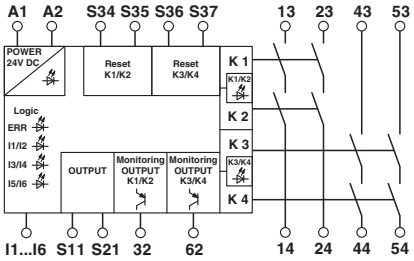

Circuit diagram

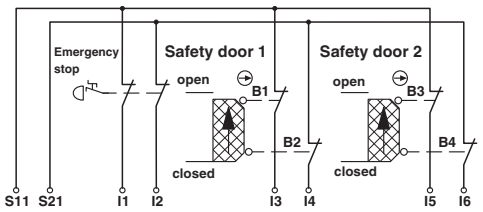

Safety relays - PSR-SPP-24DC/MXF1/4X1/2X2/B - 2902726

Application drawing

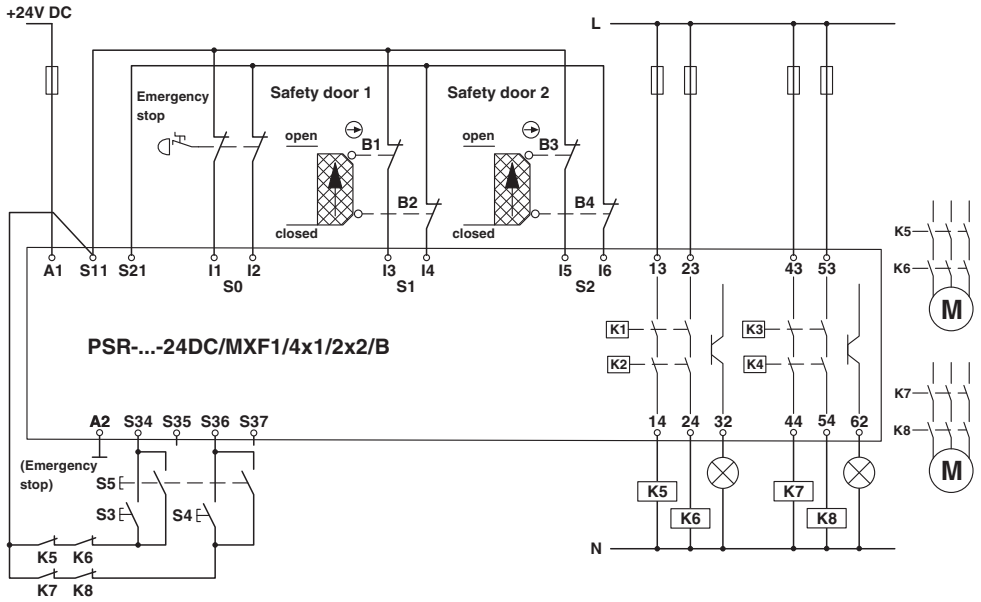

Circuit diagram

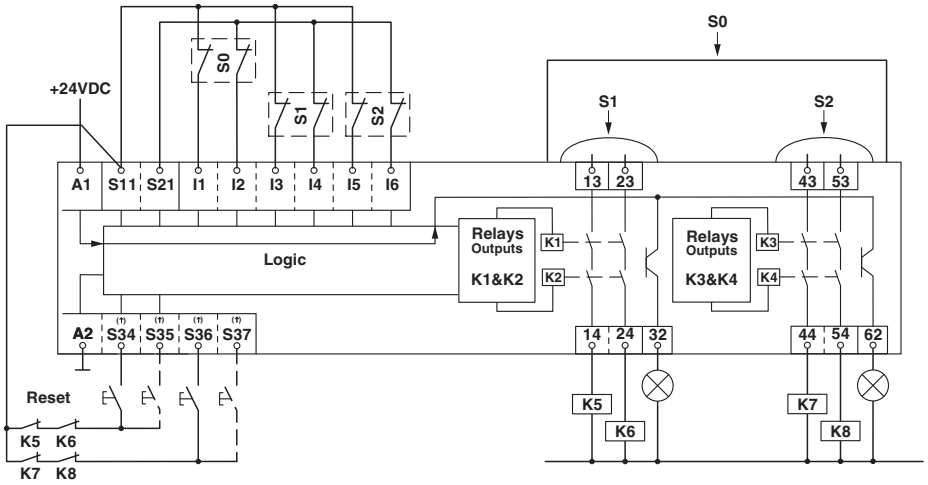

Approvals

Approvals

Approvals

Functional Safety / UL Listed / cUL Listed / EAC / cULus Listed

Ex Approvals

Safety relays - PSR-SPP-24DC/MXF1/4X1/2X2/B - 2902726

Approvals

Approval details

Functional Safety			01/205/5353.00/13
UL Listed		http://database.ul.com/cgi-bin/XYV/template/LISEXT/1FRAME/index.htm	FILE E 140324
cUL Listed		http://database.ul.com/cgi-bin/XYV/template/LISEXT/1FRAME/index.htm	FILE E 140324
EAC			RU C-DE.A*30.B.01082
cULus Listed			

Phoenix Contact 2018 © - all rights reserved
http://www.phoenixcontact.com

PHOENIX CONTACT GmbH & Co. KG
Flachsmarktstr. 8
32825 Blomberg
Germany
Tel. +49 5235 300
Fax +49 5235 3 41200
http://www.phoenixcontact.com