PSR-MC32

PL EN ISO 13849

SILCL IEC 62061



Safety relay for emergency stop, safety door, and light grid monitoring with wide range input

Data sheet
106786_en_01

© PHOENIX CONTACT 2016-12-16

1 Description

Intended Use

The safety relay is used to monitor single or two-channel signal generators and to control actuators.

When the sensor circuit is interrupted, the safety relay initiates the safe state.

The safety relay interrupts circuits in a safety-related way.

Possible signal generators

- Emergency stop button
- Door locking mechanisms
- Light grids

Contact type

- 3 undelayed enabling current paths
- 1 undelayed enabling current path

The enabling current paths drop out without delay according to stop category 0 (EN 60204-1).

Control

- Single or two channel
- Equivalent or non-equivalent
- Automatic or manual, monitored start

Achievable safety integrity

- Suitable up to category 4, PL e (EN ISO 13849-1), SILCL 3 (EN 62061)

Additional features

- 24 V AC/DC ... 230 V AC/DC wide range input
- Cross circuiting detection
- Option of screw or spring-cage terminal blocks for plug-in
- 22.5 mm housing width

Zulassungen

c UL us LISTED, EAC, TÜV Type Tested

WARNING: Risk of electric shock

Observe the safety regulations and installation notes in the corresponding section.

Make sure you always use the latest documentation.
It can be downloaded from the product at phoenixcontact.net/products.

This document is valid for the products listed in the “Ordering data”.

This document meets the same requirements as the original operating instructions with respect to the contents.

2 Table of contents

1 Description 1
2 Table of contents 2
3 Ordering data 3
4 Technical data 3
5 Safety regulations and installation notes 7
6 Function description 8
7 Function and time diagrams 9
8 Basic circuit diagram 10
9 Derating 11
10 Load curve 11
11 Operating and indication elements 12
12 Mounting and removing 13
13 Wiring 13
14 Startup 14
15 Calculating the power dissipation 14
16 Diagnostics 15
17 Application examples 17
18 Attachment 25

3 Ordering data

Description	Type	Order No.	Pcs./Pkt.
Safety relay for emergency stop, safety doors, and light grids up to SILCL 3, Cat. 4, PL e, 1 or 2-channel operation, automatic or manual, monitored start, 3 enabling current paths, 1 signaling current path, U_S = 24 ... 230 V AC/DC, plug-in screw terminal block	PSR-MC32-3NO-1NC-24-230UC-SC	2700524	1
Safety relay for emergency stop, safety doors, and light grids up to SILCL 3, Cat. 4, PL e, 1 or 2-channel operation, automatic or manual, monitored start, 3 enabling current paths, 1 signaling current path, U_S = 24 ... 230 V AC/DC, plug-in spring-cage terminal block	PSR-MC32-3NO-1NC-24-230UC-SP	2700525	1

4 Technical data

Hardware/firmware version	
HW/FW	≥ 00/--
The technical data and safety characteristics are valid as of the specified HW/FW version.	

Input data	
Rated control circuit supply voltage U_S	24 V AC/DC ... 230 V AC/DC -15 % / +10 %
Rated control supply current I_S	typ. 103 mA (24 V DC) typ. 47 mA (48 V DC) typ. 38 mA (110 V AC) typ. 21 mA (230 V AC)
Input voltage range "0" signal	0 V DC ... 5 V DC (for safe Off; at S10/S12/S13)
Input current range "0" signal	0 mA ... 2 mA (for safe Off; at S10/S12/S13)
Inrush current	< 80 A (Δt = 50 µs at U_s) < 5 mA (with U_s/I_x at S10/S12/S13) > -5 mA (with U_s/I_x to S22) < 10 mA (with U_s/I_x at S34/S35)
Current consumption	< 5 mA (at U_s/I_x to S10/S12/S13/S34/S35) > -5 mA (with U_s/I_x to S22)
Power consumption at U_S	2.7 W (with DC) 2.9 W (with AC)
Apparent power	typ. 5 VA (at U_S)
Voltage at input/start and feedback circuit	24 V DC -20 % / +25 %
Filter time	2 ms (at A1 in the event of voltage dips at U_S) max. 1.5 ms (to S10-S12; test pulse width; at 24 V DC) 7.5 ms (to S10-S12; test pulse rate; at 24 V DC) Test pulse rate = 5 x Test pulse width
Max. permissible overall conductor resistance (Input and reset circuit at U_S)	150 Ω
Typical response time at U_s	< 100 ms (manual, monitored start) < 150 ms (automatic start)
Typical starting time with U_s	< 200 ms (when controlled via A1)
Typical release time with U_s	< 20 ms (when actuation is via the sensor circuit)

Input data	
Recovery time	< 500 ms
Restart time	< 1 s
Maximum switching frequency	1 Hz
Concurrence input 1/2	∞
Operating voltage display	1 x green LED
Status display	3 x green LED
Protective circuit	U_S: surge protection 275 V varistor / 411 V suppressor diode Inputs: protection against polarity reversal, surge protection 38.6 V suppressor diode

Output data	
Contact type	3 enabling current paths 1 signaling current path
Contact material	$AgSnO_2$
Minimum switching voltage	5 V AC/DC
Maximum switching voltage	250 V AC/DC (Observe the load curve)
Limiting continuous current	6 A
Maximum inrush current	6 A
Inrush current, minimum	10 mA
Sq. Total current $I_{TH}^2 = I_1^2 + I_2^2 + ... + I_N^2$	72 A^2 (observe derating)
Interrupting rating (ohmic load) max.	1500 VA (N/O contact, 250 V AC, τ = 0 ms) For additional values, see load curve
Maximum interrupting rating (inductive load)	48 W (N/O contact, 24 V DC, τ = 40 ms) 40 W (N/O contact, 48 V DC, τ = 40 ms) 36 W (N/O contact, 60 V DC, τ = 40 ms) 35 W (N/O contact, 110 V DC, τ = 40 ms) 33 W (N/O contact, 220 V DC, τ = 40 ms) 1500 VA (N/O contact, 250 V AC, τ = 40 ms)
Switching capacity	min. 50 mW
Mechanical service life	10 x 10^6 cycles
Switching capacity according to IEC 60947-5-1	5 A (24 V (DC13)) 5 A (250 V (AC15))
Output fuse	6 A gL/gG 4 A gL/gG (for low-demand applications)

General data	
Relay type	Electromechanical relay with forcibly guided contacts in accordance with EN 50205
Nominal operating mode	100% operating factor
Degree of protection	IP20
Min. degree of protection of inst. location	IP54
Mounting type	DIN rail mounting
Mounting position	vertical or horizontal
Assembly instructions	See derating curve
Type of housing	PBT yellow

General data	
Air clearances and creepage distances between the power circuits	according to DIN EN 50178; EN 60947-5-1
Rated insulation voltage	250 V AC
Rated surge voltage/insulation	Basic insulation 4 kV between enabling current path (23/24) and enabling current path (33/34) and signaling current path (41/42) Basic insulation 4 kV between all current paths and housing Safe isolation, reinforced insulation 6 kV between all other circuits See “Insulation coordination”
Degree of pollution	2
Overvoltage category	III
Maximum power dissipation for nominal condition	17.3 W (at I_L^2 = 72 A^2)
Note on power dissipation	See “Calculating the power dissipation”

Dimensions	Screw connection	Spring-cage connection
W x H x D	22.5 x 112.2 x 114.5 mm	22.5 x 117.4 x 114.5 mm

Connection data	Screw connection	Spring-cage connection
Conductor cross section, solid	0.2 mm² ... 2.5 mm²	0.2 mm² ... 1.5 mm²
Conductor cross section, flexible	0.2 mm² ... 2.5 mm²	0.2 mm² ... 1.5 mm²
Conductor cross section AWG/kcmil	24 ... 12	24 ... 16
Stripping length	7 mm	8 mm
Screw thread	M3	

Ambient conditions	
Ambient temperature (operation)	-40 °C ... 55 °C (observe derating)
Ambient temperature (storage/transport)	-40 °C ... 85 °C
Max. permissible relative humidity (operation)	75 % (on average, 85% infrequently, non-condensing)
Max. permissible humidity (storage/transport)	75 % (on average, 85% infrequently, non-condensing)
Maximum altitude	≤ 2000 m (Above sea level)
Information on operating height	See the “Using PSR devices at altitudes greater than 2000 m above sea level” section
Shock	15g
Vibration (operation)	10 Hz ...150 Hz, 2g

Conformance/Approvals	
Conformance	CE-compliant
The full EC Declaration of Conformity can be downloaded for the product at phoenixcontact.net/products.	
Approvals	

Safety data	
Stop category according to IEC 60204	0

Safety parameters for IEC 61508 - High demand	
SIL	3
PFH_D	1.00×10^{-9} (5 A DC13; 5 A AC15; 8760 switching cycles/year)
Demand rate	< 12 Months
Proof test interval	240 Months
Duration of use	240 Months

Safety parameters for IEC 61508 - Low demand	
SIL	3
PFD_{avg}	$1{,}49 \times 10^{-4}$
Proof test interval	56 Months
Duration of use	240 Months

Safety characteristic data according to EN ISO 13849	
Category	4 (5 A DC13; 5 A AC15; 8760 switching cycles/year)
Performance level	e
Duration of use	240 Months
For applications in PL e, the required demand rate for the safety function is once per month.	

Safety parameters for EN 62061	
SILCL	3

5 Safety regulations and installation notes

WARNING: Death, serious personal injury or damage to equipment

Depending on the application, incorrect handling of the device may pose serious risks for the user or cause damage to equipment.

- Observe all the safety notes and warning instructions provided in this chapter and elsewhere in this document.

General

- Observe the safety regulations of electrical engineering and industrial safety and liability associations.

Disregarding these safety regulations may result in death, serious personal injury or damage to equipment.

Power supply units for power supply

- Provide external protection for the input area (A1/A2).
- Make sure that the power supply unit is able to supply **four times** the nominal current of the external fuse, to ensure that it trips in the event of an error.

Startup, mounting, and modifications

Startup, mounting, modifications, and upgrades may only be carried out by an electrically skilled person.

- Before working on the device, disconnect the power.
- Carry out wiring according to the application. Refer to the “Application examples” section for this.

Reliable operation is only ensured if the device is installed in housing protected from dust and humidity.

- Install the device in housing protected from dust and humidity (min. IP54).

In operation

During operation, parts of electrical switching devices carry hazardous voltages.

- Protective covers must not be removed when operating electrical switching devices.

For emergency stop applications, automatic startup of the machine can pose serious risks for the user.

- The machine must be prevented from restarting automatically by a higher-level controller.

With the manual, monitored reset device, a machine start may not be triggered in accordance with EN ISO 13849-1.

Inductive loads can lead to welded relay contacts.

- Connect a suitable and effective protective circuit to inductive loads.
- Implement the protective circuit parallel to the load and not parallel to the switch contact.

Magnetic fields can influence the device. The magnetic field strength of the environment must not exceed 30 A/m.

- Do not use the device in the vicinity of strong magnetic fields (e.g., caused by transformers or magnetic iron).

Noise emission may occur when operating relay modules. Wireless reception may be disrupted in residential areas.

The device is a Class A product.

- Observe the requirements for noise emission for electrical and electronic equipment (EN 61000-6-4).
- Implement appropriate precautions against noise emission.

Faulty devices

The devices may be damaged following an error. Correct operation can no longer be ensured.

- In the event of an error, replace the device.

Only the manufacturer or their authorized representative may perform the following activities. Otherwise the warranty is invalidated.

– Repairs to the device
– Opening the housing

Taking out of service and disposal

- Dispose of the device in accordance with environmental regulations.
- Make sure that the device can never be reused.

6 Function description

6.1 Single-channel sensor circuit

The sensor circuit is not designed with redundancy.

The safety relay does not detect short and cross-circuits in the sensor circuit.

6.2 Two-channel sensor circuit

The sensor circuit is designed with redundancy.

With the corresponding wiring, the safety relay detects short and cross-circuits in the sensor circuit.

6.3 Automatic start

The device starts automatically after the sensor circuit has been closed.

6.4 Manual, monitored start

When the sensor circuit is closed, the device starts once the start circuit has been closed and opened again by pressing and releasing the reset button.

A connected reset button is monitored.

6.5 Safe shutdown

When the sensor circuit opens, the enabling current paths open without delay.

When the enabling current paths are open, the device is in the safe state.

The signaling current path closes.

7 Function and time diagrams

7.1 Time diagram for automatic start

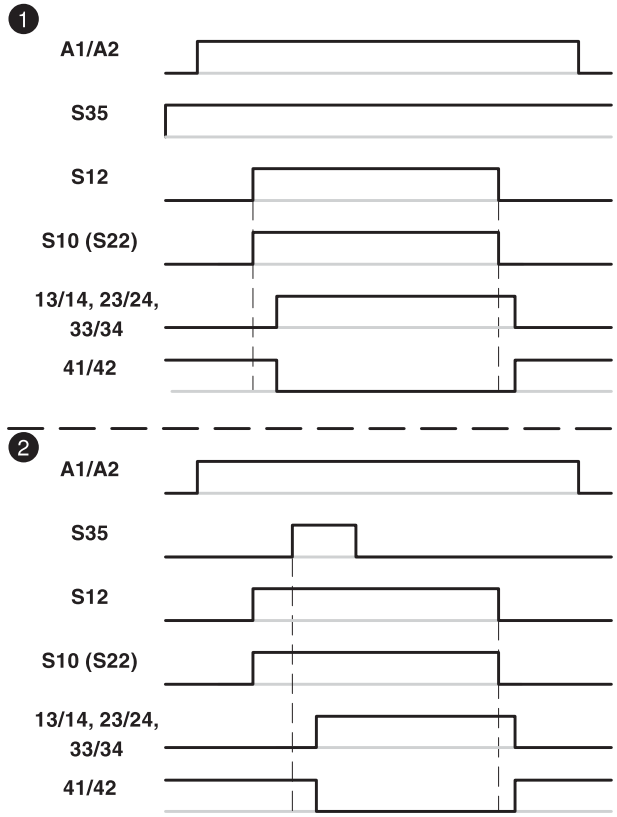

Figure 1 Time diagram for automatic start

7.2 Time diagram for manual, monitored start

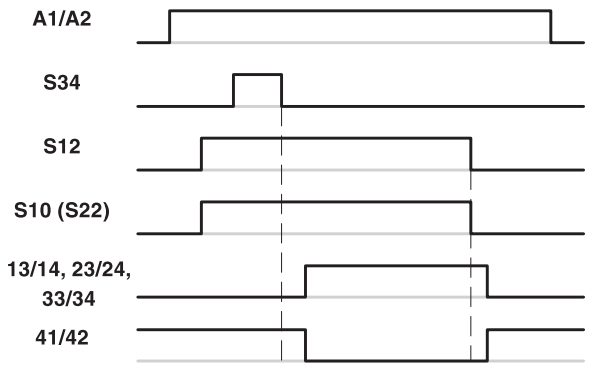

Figure 2 Time diagram for manual, monitored start

7.3 Time diagram for non-equivalent wiring

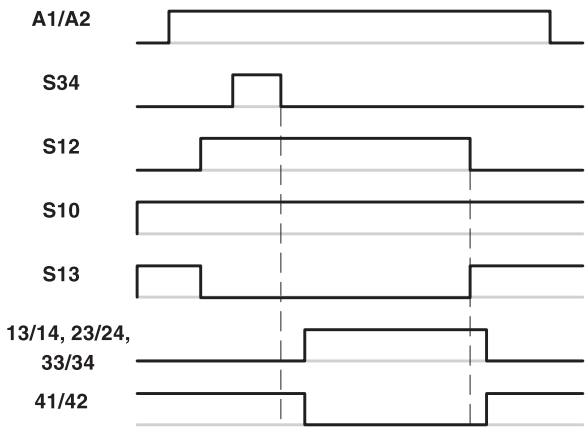

Figure 3 Time diagram for non-equivalent wiring (manual, monitored start)

Key:

❶	Automatic start
❷	Start via external signal at S35 which is not monitored
A1/A2	Power supply
S34	Manual, monitored start
S35	Automatic start
S10	Input sensor circuit (channel 2) for equivalent wiring without cross-circuit detection
S11	Output 24 V
S12	Input sensor circuit (channel 1)
S13	Input sensor circuit (channel 2) for non-equivalent wiring
S21	Output 0 V
S22	Input sensor circuit (channel 2) for equivalent wiring with cross-circuit detection
13/14, 23/24, 33/34	Undelayed enabling current paths
41/42	Signaling current path, undelayed

8 Basic circuit diagram

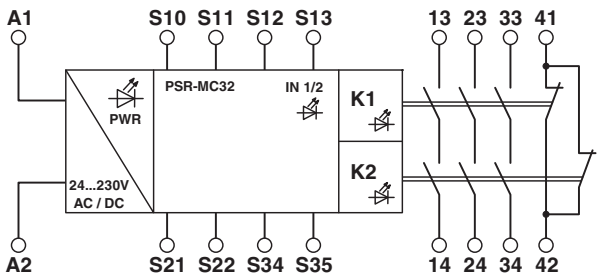

Figure 4 Block diagram

Key:

A1	24 V AC/DC ... 230 V AC/DC power supply (L)
A2	Power supply (N)
S10	Input sensor circuit (channel 2) for equivalent wiring without cross-circuit detection
S11	Output 24 V
S12	Input sensor circuit (channel 1)
S13	Input sensor circuit (channel 2) for non-equivalent wiring
S21	Output 0 V
S22	Input sensor circuit (channel 2) for equivalent wiring with cross-circuit detection
S34	Manual, monitored start
S35	Automatic start
13/14	
23/24	Undelayed enabling current paths
33/34	
41/42	Signaling current path, undelayed

8.1 Insulation coordination

	A1/A2	Logic	13/14	23/24	33/34	41/42
A1/A2	-	6 kV ST	6 kV ST	6 kV ST	6 kV ST	6 kV ST
Logic	-	-	6 kV ST	6 kV ST	6 kV ST	6 kV ST
13/14	-	-	-	6 kV ST	6 kV ST	6 kV ST
23/24	-	-	-	-	4 kV BI	4 kV BI
33/34	-	-	-	-	-	4 kV BI
41/42	-	-	-	-	-	-

Key:

BI	Basic insulation
ST	Safe isolation

Basic insulation

(rated surge voltage of 4 kV)

A mixture of SELV and PELV is strictly prohibited. Only switch 230 V AC at one of the enable contacts if the adjacent contact carries the same potential.

Safe isolation/reinforced insulation

(rated surge voltage of 6 kV)

Reinforced insulation (e.g., thanks to greater air clearances and creepage distances between conductive paths) is designed for one overvoltage category higher than basic insulation. This means that SELV circuits of $U \leq 25$ V AC or $U \leq 60$ V DC and circuits with higher voltages can be mixed.

9 Derating

9.1 Horizontal mounting position

The derating curve applies for the following conditions:

– Mounting on a horizontal DIN rail
– Devices mounted next to each other without spacing

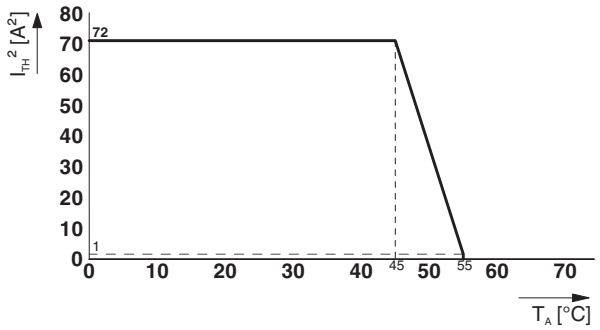

Figure 5 Derating curve - horizontal mounting position, without spacing

9.1.1 Horizontal mounting position with spacing

If the devices are mounted in the **horizontal** mounting position with ≥ 9 mm spacing between one another, no derating is required **up to 60°C**.

9.2 Vertical mounting position

The derating curve applies for the following conditions:

– Mounting on a vertical DIN rail
– Devices mounted next to each other without spacing

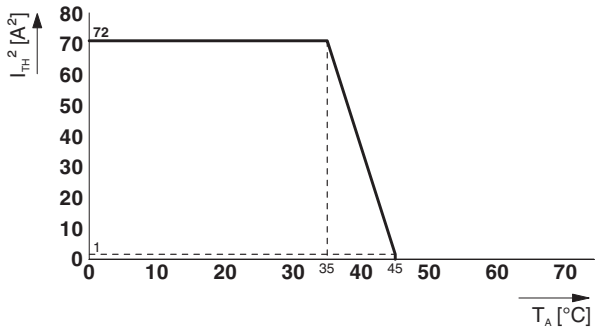

Figure 6 Derating curve - vertical mounting position, without spacing

9.2.1 Vertical mounting position with spacing

The derating curve applies for the following conditions:

– Mounting on a vertical DIN rail
– Devices mounted next to each other with ≥ 9 mm spacing

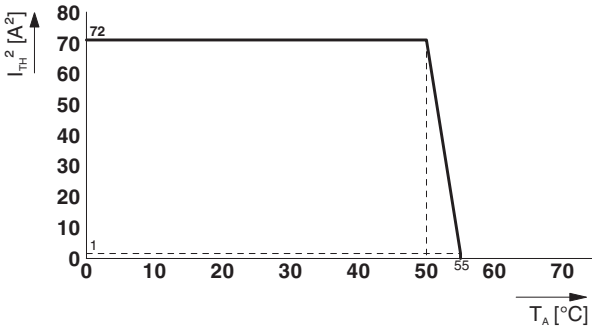

Figure 7 Derating curve - vertical mounting position, with spacing

10 Load curve

10.1 Ohmic load

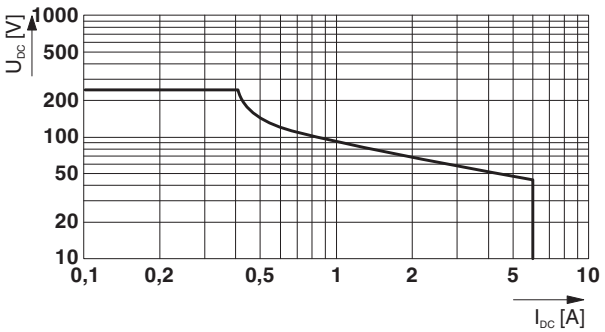

Figure 8 Relay load curve - ohmic load

11 Operating and indication elements

11.1 Connection versions

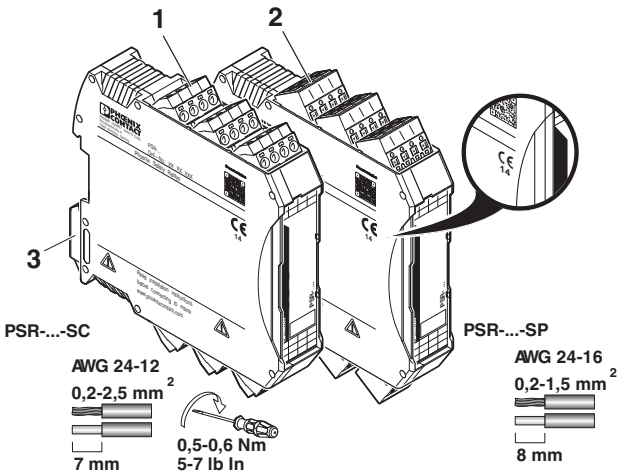

Figure 9 Connection versions

1 COMBICON plug-in screw terminal block
2 COMBICON plug-in spring-cage terminal block
3 Metal lock for fixing to DIN rail

The year the device was constructed can be found underneath the CE designation on the housing.

11.2 Connection assignment

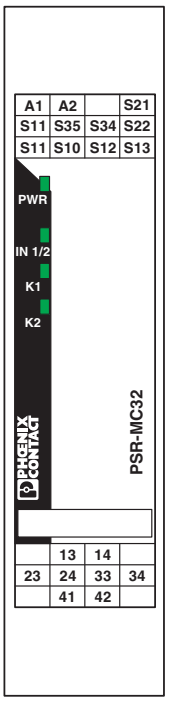

A1	24 V AC/DC ... 230 V AC/DC power supply (L)
A2	Power supply (N)
S21	Output 0 V
S11	Output 24 V
S35	Automatic start
S34	Manual, monitored start
S22	Input sensor circuit (channel 2) for equivalent wiring with cross-circuit detection
S10	Input sensor circuit (channel 2) for equivalent wiring without cross-circuit detection
S12	Input sensor circuit (channel 1)
S13	Input sensor circuit (channel 2) for non-equivalent wiring
PWR	Power LED (green)
IN1/2	Status indicator sensor circuit; LED (green)
K1	Status indicator safety circuit; LED (green)
K2	Status indicator safety circuit; LED (green)
41/42	Signaling current path, undelayed
13/14	Undelayed enabling current paths
23/24	
33/34	

12 Mounting and removing

- Mount the device on a 35 mm DIN rail according to EN 60715.
- To remove the device, use a screwdriver to release the snap-on foot.

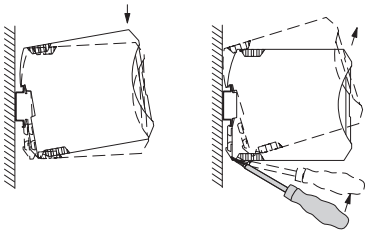

Figure 10 Mounting and removing

13 Wiring

- Connect the cables to the connection terminal blocks using a screwdriver.

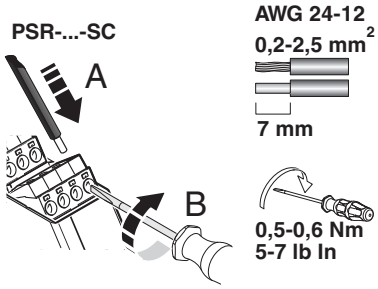

Figure 11 Connecting the cables for PSR-...-SC (screw terminal block)

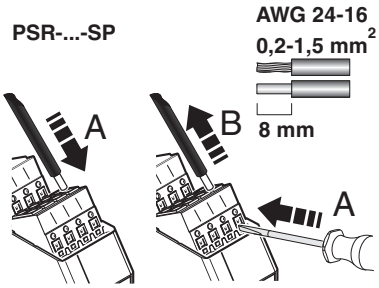

Figure 12 Connecting the cables for PSR-...-SC (spring-cage terminal block)

It is recommended that ferrules are used to connect stranded cables.

For compliance with UL approval, use copper wire that is approved up to 60°C/75°C.

13.1 Signal generator connection versions

- Connect suitable signal generators to S10/S11/S12/ S13 and S21/S22.

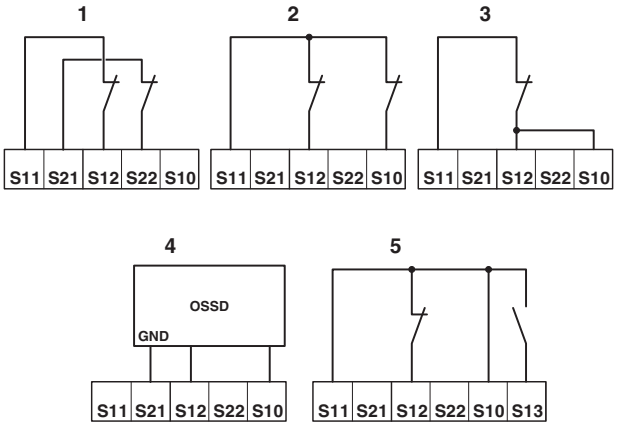

Figure 13 Signal generator connection versions

1 Two-channel connection with cross-circuit monitoring
2 Two-channel connection without cross-circuit monitoring
3 Single-channel connection
4 Two-channel connection with **external** cross-circuit monitoring
5 Two-channel, non-equivalent connection

13.2 Start and feedback circuit connection variants

Automatic start

- Bridge the contacts S11/S35.

Manual, monitored start

- Connect a reset button to S11/S34.

A connected reset button is monitored.

Start and feedback circuit

- Place the relevant N/C contacts in path S11/S34 or S11/S35 to monitor external contactors or extension devices with force-guided contacts.

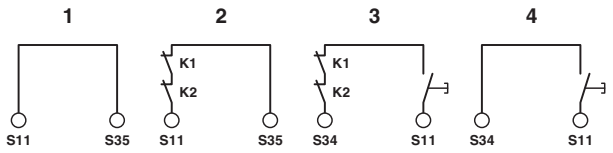

Figure 14 Start and feedback circuit connection variants

1 Automatic start
2 Automatic start with monitored contact extension
3 Manual, monitored start with monitored contact extension
4 Manual, monitored start

14 Startup

- Apply the rated control circuit supply voltage (24 V AC/DC ... 230 V AC/DC) at terminal blocks A1/A2.

The Power LED lights up.

- Close the sensor circuit at S10/S11/S12/S13 and S21/S22 as per the wiring.

The IN1/2 LED lights up.

Single or two-channel sensor circuit: see “Signal generator connection versions”.

Automatic start

The enabling current paths 13/14, 23/24 and 33/34 close.

The K1 and K2 LEDs light up.

Signaling current path 41/42 opens.

Manual, monitored start

- Press the reset button.
- Release the reset button.

The enabling current paths 13/14, 23/24 and 33/34 close.

The K1 and K2 LEDs light up.

Signaling current path 41/42 opens.

15 Calculating the power dissipation

The total power dissipation of the safety relay is based on the input power dissipation and the contact power dissipation for the same and for different load currents.

Input power dissipation

P_{Input} = 2,7 W (with DC)

P_{Input} = 2,9 W (with AC)

Contact power dissipation

With the same load currents:

$P_{Contact} = n \bullet I_L^2 \bullet 200\ m\Omega$

With different load currents:

$P_{Contact} = (I_{L1}^2 + I_{L2}^2 + ... + I_{Ln}^2) \bullet 200\ m\Omega$

Total power dissipation

$P_{Total} = P_{Input} + P_{Contact}$

therefore

$P_{Total} = P_{Input} + n \bullet I_L^2 \bullet 200\ m\Omega$

or

$P_{Total} = P_{Input} + (I_{L1}^2 + I_{L2}^2 + ... + I_{Ln}^2) \bullet 200\ m\Omega$

Key:

P	Power dissipation in mW
n	Number of enabling current paths used
I_L	Contact load current

16 Diagnostics

The following section describes the LED indicators for general states and error messages as well as possible causes and remedies.

Function test/proof test

To verify the device function, proceed as follows:

- Demand the safety function by actuating the corresponding safety equipment.
- Check whether the safety function was executed correctly by switching the device on again.

If the device does not switch on again, the proof test failed.

WARNING: Loss of functional safety due to malfunction.

If the proof test contains errors, the device no longer functions correctly.

- Replace the device.

16.1 General states

PWR LED	IN1/2 LED	K1 LED	K2 LED	State	Notes
ON	OFF	OFF	OFF	No relay has picked up. The sensor circuit is inactive.	Possible error see error messages
ON	ON	OFF	OFF	The sensor circuit is active. Relays K1 and K2 are ready to start and await reset/ start command (S34 or S35).	
ON	ON	ON	ON	The sensor circuit is active. All relays are picked up.	-

16.2 Error Messages

PWR LED	IN1/2 LED	K1 LED	K2 LED	State	Possible cause	Corrective
ON	OFF	OFF	OFF	The sensor circuit is actively controlled, but no input LEDs are lit up.	Internal cross-circuit detection is active: potential cross-circuit in the sensor circuit.	Switch off the operating voltage and rectify the cross-circuit. Then perform a function test.
ON	ON	OFF	OFF	The sensor circuit is active. The reset/start circuit (S34 or S35) is/was activated. The safety circuit (K1 and K2) is not picking up.	External error: the readback contact (external actuator) is open in the reset circuit. Internal error: 1. The diagnostic contact is not working correctly. 2. An N/O contact is welded.	External error: check the actuator. Internal error: perform a power down reset with subsequent function test. **If the error occurs again after the function test, replace the device.**
ON	ON	OFF	OFF	The sensor circuit is active. The reset/start circuit (S34) is/was activated. The safety circuit (K1 and K2) is not picking up.	Error during manual reset S34 (stuck-at at the input).	Remove the error in the reset/start circuit. Then perform a function test.
ON	ON	OFF	ON	The sensor circuit is active. The reset/start circuit (S34 or S35) is/was activated. The safety circuit (K1) is not picking up.	External error: sensor circuit channel 1 was opened and reactivated. Internal error: diagnostics active.	External error: check the sensor circuit. Internal error: perform a power down reset with subsequent function test. **If the error occurs again after the function test, replace the device.**
ON	ON	ON	OFF	The sensor circuit is active. The reset/start circuit (S34 or S35) is/was activated. The safety circuit (K2) is not picking up.	External error: sensor circuit channel 2 was opened and reactivated. Internal error: diagnostics active.	External error: check the sensor circuit. Internal error: perform a power down reset with subsequent function test. **If the error occurs again after the function test, replace the device.**
OFF	OFF	OFF	OFF	The sensor circuit is active.	1. No supply voltage at A1/A 2. Over- or undervoltage at A1	Check the supply voltage.

17 Application examples

17.1 Emergency stop monitoring/automatic start

- Two-channel emergency stop monitoring
- Automatic start
- Monitoring of external, force-guided contactors
- Suitable up to category 4, PL e (EN ISO 13849-1), SIL 3 (EN 62061), if cross-circuits in the control to the actuator can be ruled out

Cross-circuits in the cable installation can be excluded if the safety relay and external contactors K1 and K2 are located in the same electrical installation space.

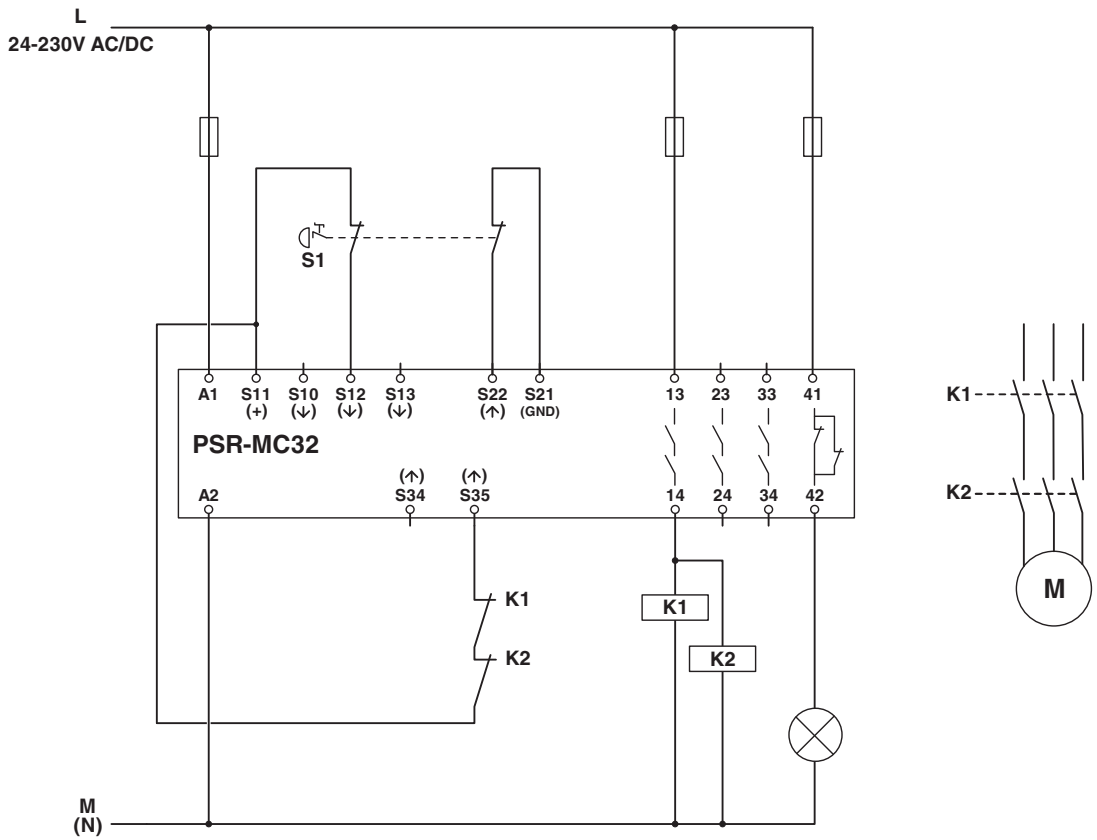

Figure 15 Emergency stop monitoring/automatic start

Key:

S1	Emergency stop button
K1/K2	Force-guided contactors

17.2 Emergency stop monitoring / automatic start / without cross-circuit detection

- Two-channel emergency stop monitoring
- Automatic start
- Monitoring of external, force-guided contactors
- No cross-circuit detection in the sensor circuit
- Suitable up to category 4, PL e (EN ISO 13849-1), SIL 3 (EN 62061), if cross-circuits in the control to the actuator and the sensor circuit can be ruled out

Cross-circuits in the cable installation can be excluded if the safety relay and external contactors K1 and K2 are located in the same electrical installation space.

For sensor circuits in the field, prevent cross-circuits by using a cable installation that is protected mechanically.

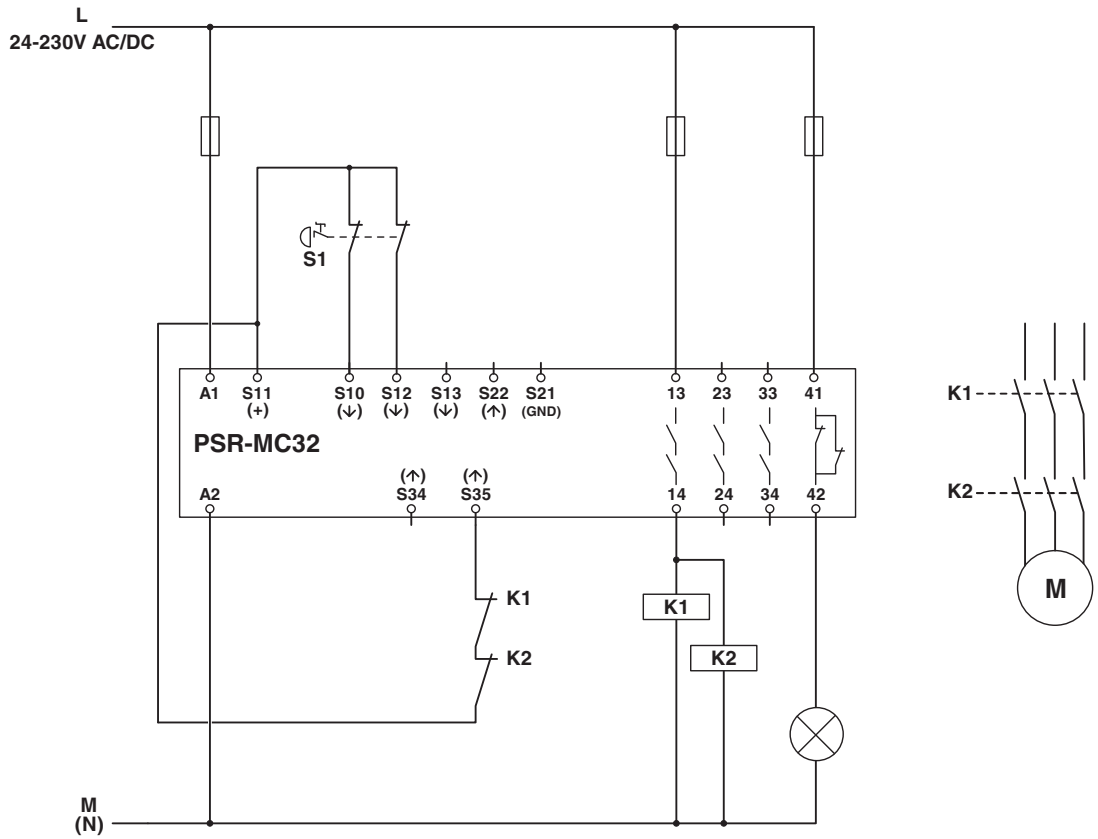

Figure 16 Emergency stop monitoring / automatic start / without cross-circuit detection

Key:

S1	Emergency stop button
K1/K2	Force-guided contactors

17.3 Emergency stop monitoring/manual, monitored start

- Two-channel emergency stop monitoring
- Manual, monitored start
- Monitoring of external, force-guided contactors
- Suitable up to category 4, PL e (EN ISO 13849-1), SIL 3 (EN 62061), if cross-circuits in the control to the actuator can be ruled out

Cross-circuits in the cable installation can be excluded if the safety relay and external contactors K1 and K2 are located in the same electrical installation space.

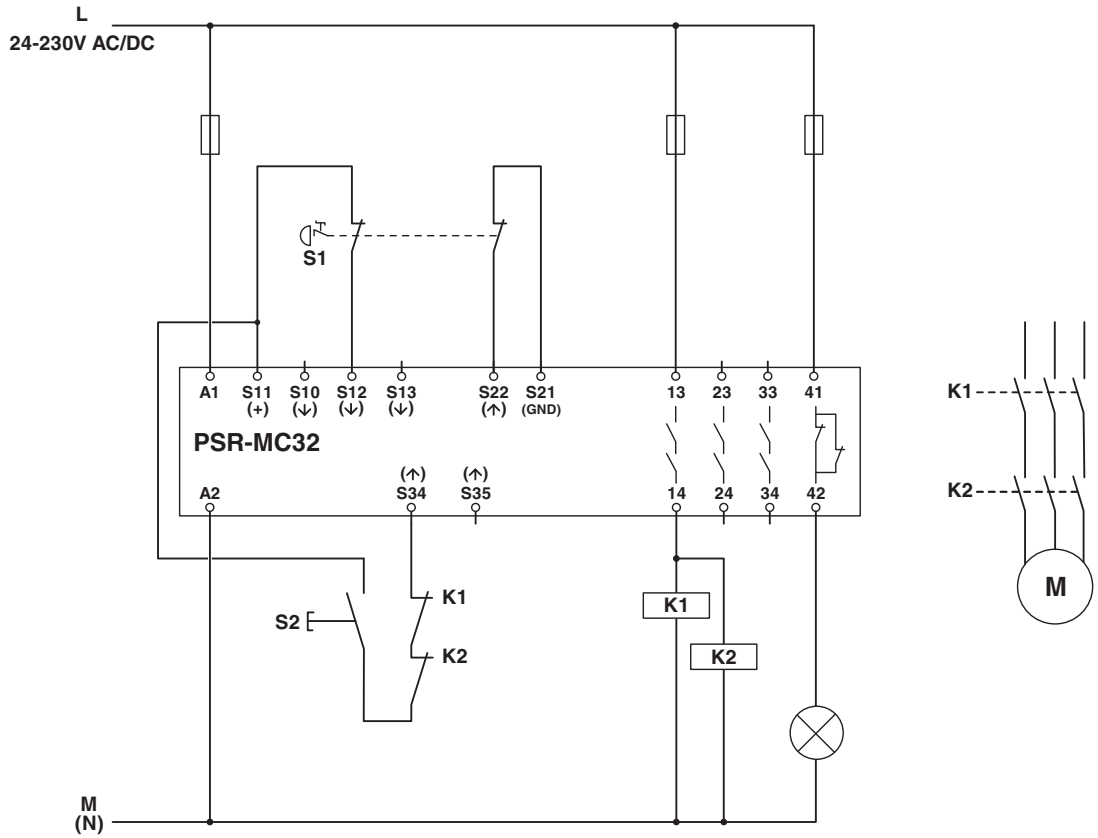

Figure 17 Emergency stop monitoring/manual, monitored start

Key:

S1	Emergency stop button
S2	Manual reset device
K1/K2	Force-guided contactors

17.4 Emergency stop monitoring / manual, monitored start / without cross-circuit detection

- Two-channel emergency stop monitoring
- Manual, monitored start
- Monitoring of external, force-guided contactors
- No cross-circuit detection in the sensor circuit
- Suitable up to category 4, PL e (EN ISO 13849-1), SIL 3 (EN 62061), if cross-circuits in the control to the actuator and the sensor circuit can be ruled out

Cross-circuits in the cable installation can be excluded if the safety relay and external contactors K1 and K2 are located in the same electrical installation space.

For sensor circuits in the field, prevent cross-circuits by using a cable installation that is protected mechanically.

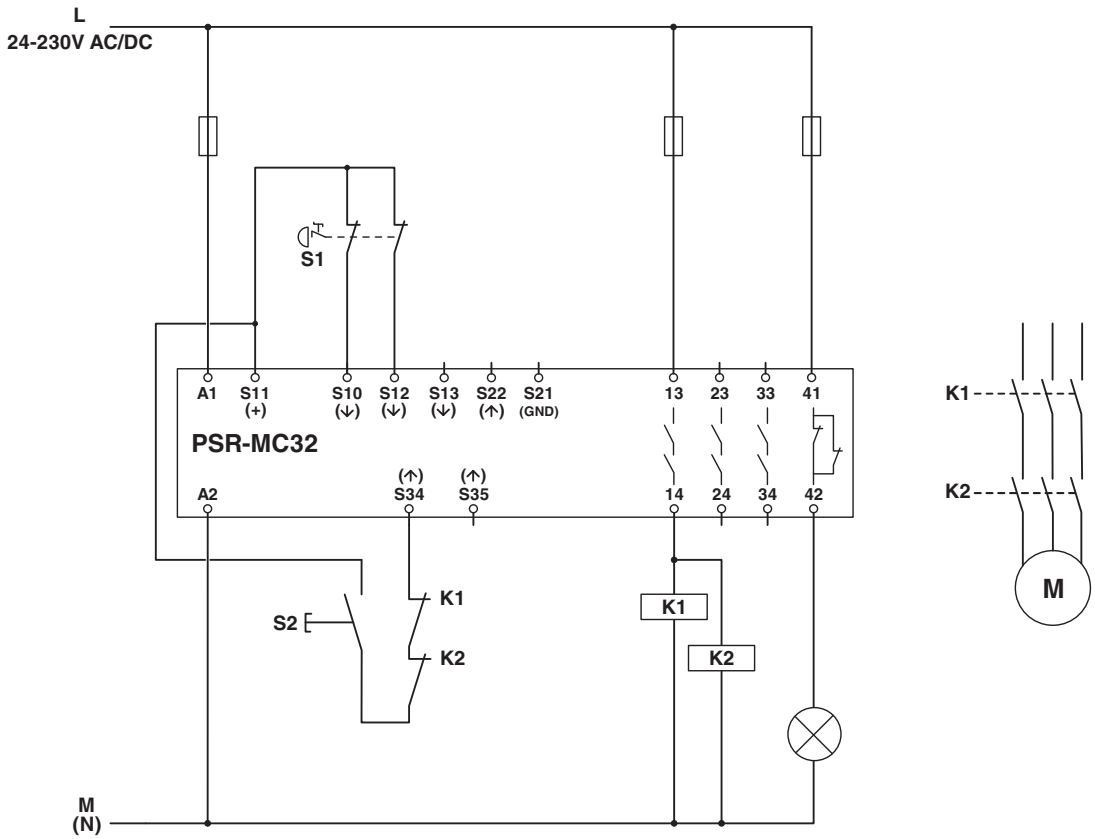

Figure 18 Emergency stop monitoring / manual, monitored start / without cross-circuit detection

Key:

S1	Emergency stop button
S2	Manual reset device
K1/K2	Force-guided contactors

17.5 Single-channel emergency stop monitoring

- Single-channel emergency stop monitoring
- Manual, monitored start
- Monitoring of external contactors (optional)
- No cross-circuit detection in the sensor circuit
- Suitable up to category 1, PL c (EN ISO 13849-1), SIL 1 (EN 62061)

Feedback from contactor K1 is not essential in order to achieve category 1.

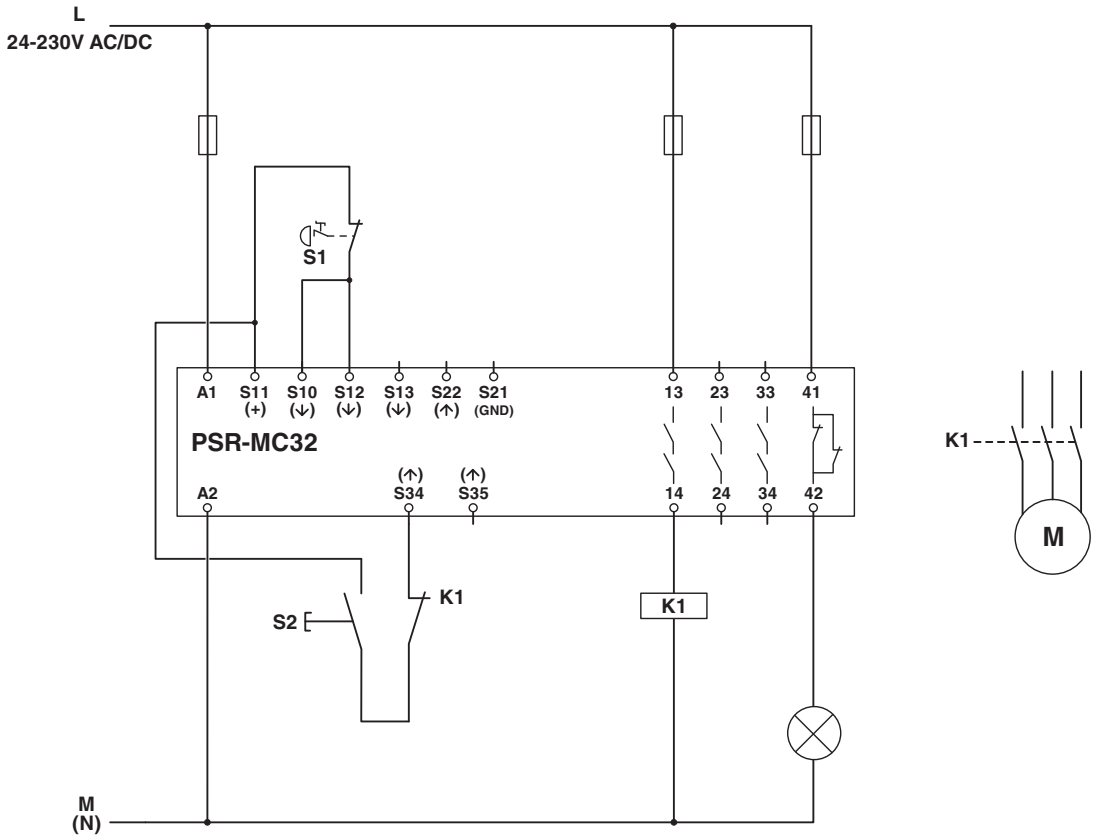

Figure 19 Single-channel emergency stop monitoring/manual, monitored start

Key:

S1	Emergency stop button
S2	Manual reset device
K1	Contactor

17.6 Magnetic switch monitoring/automatic start

- Two-channel, non-equivalent magnetic switch monitoring
- Automatic start
- Monitoring of external, force-guided contactors
- Suitable up to category 4, PL e (EN ISO 13849-1), SIL 3 (EN 62061), if cross-circuits in the control to the actuator can be ruled out

Cross-circuits in the cable installation can be excluded if the safety relay and external contactors K1 and K2 are located in the same electrical installation space.

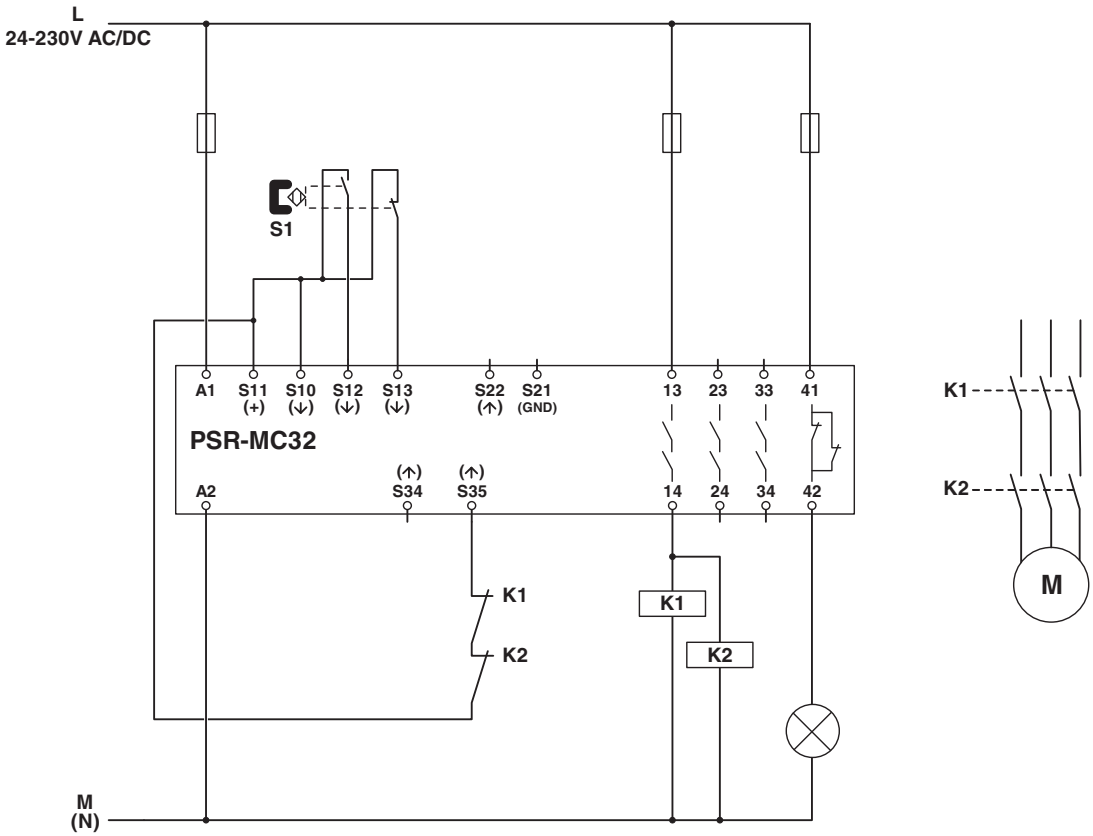

Figure 20 Magnetic switch monitoring/automatic start

Key:

S1	Solenoid switch
K1/K2	Force-guided contactors

17.7 Magnetic switch monitoring/manual, monitored start

- Two-channel, non-equivalent magnetic switch monitoring
- Manual, monitored start
- Monitoring of external, force-guided contactors
- Suitable up to category 4, PL e (EN ISO 13849-1), SIL 3 (EN 62061), if cross-circuits in the control to the actuator can be ruled out

Cross-circuits in the cable installation can be excluded if the safety relay and external contactors K1 and K2 are located in the same electrical installation space.

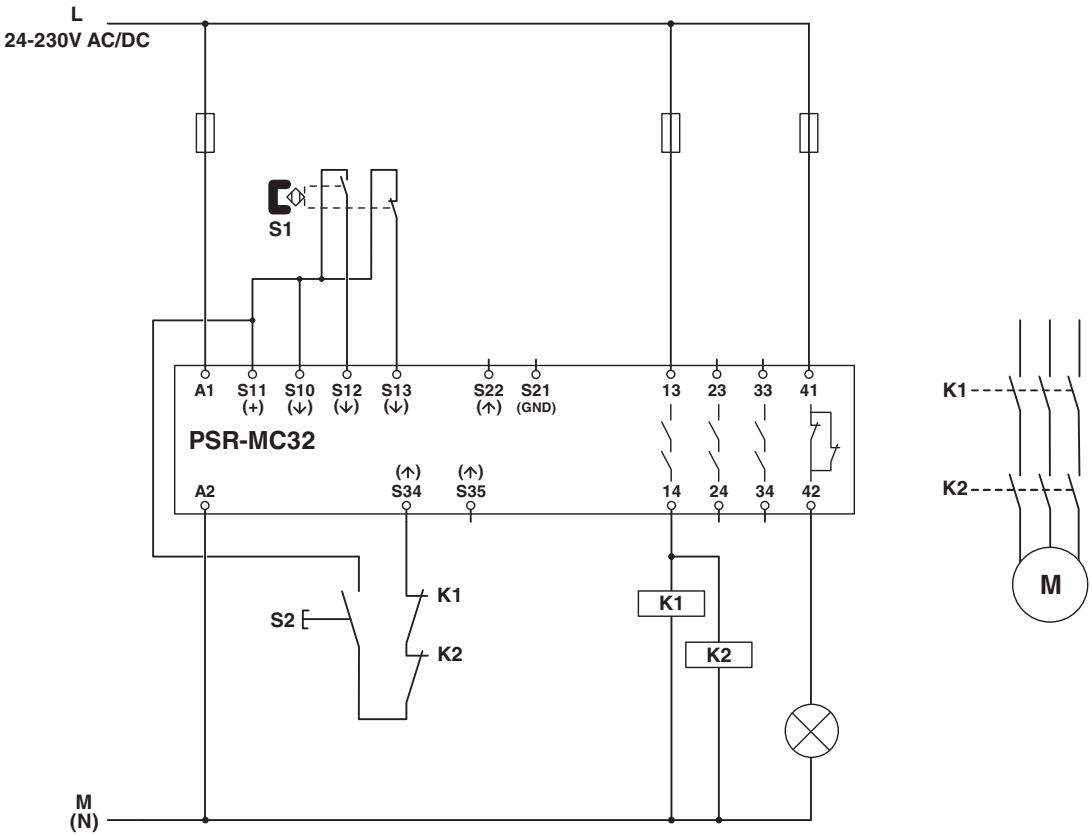

Figure 21 Magnetic switch monitoring/manual, monitored start

Key:

S1	Solenoid switch
S2	Manual reset device
K1/K2	Force-guided contactors

17.8 Light grid monitoring/manual, monitored start

- Two-channel light grid monitoring
- Manual, monitored start
- Monitoring of external, force-guided contactors
- Cross-circuit detection via light grid
- Suitable up to category 4, PL e (EN ISO 13849-1), SIL 3 (EN 62061), if cross-circuits in the control to the actuator can be ruled out

WARNING: Loss of functional safety!

Make sure that the signal generator and the safety relay have the same ground potential.

Cross-circuits in the cable installation can be excluded if the safety relay and external contactors K1 and K2 are located in the same electrical installation space.

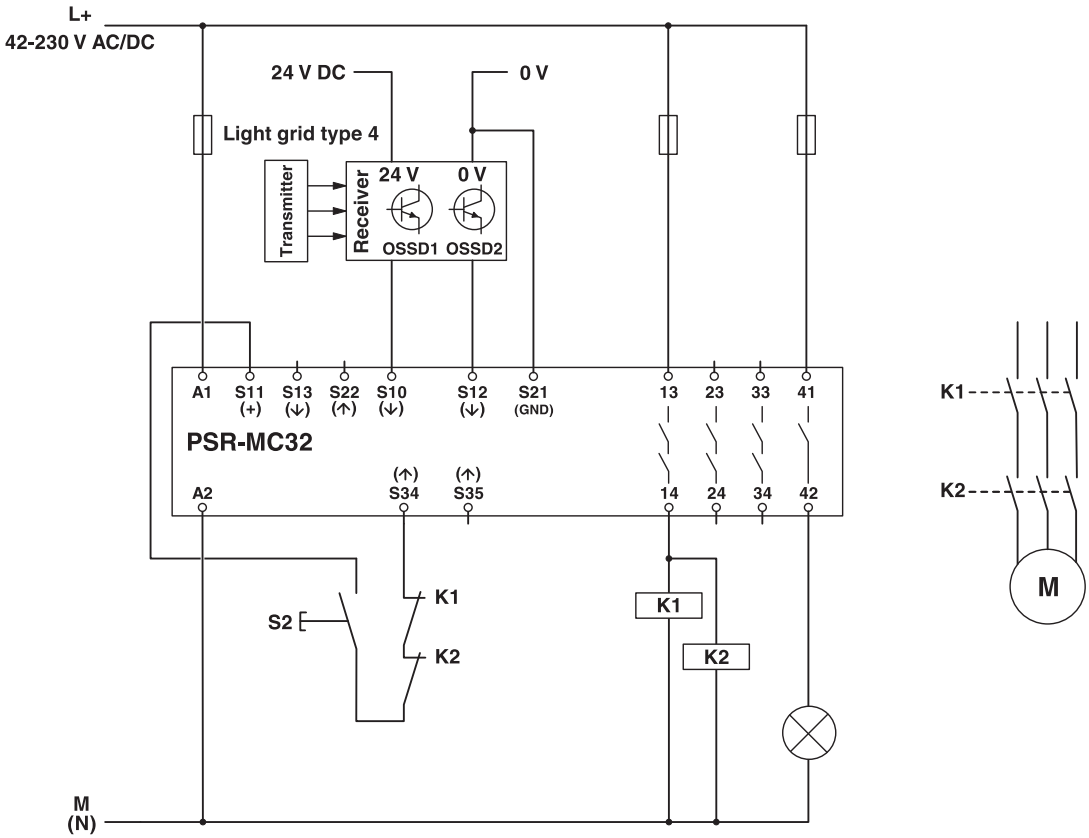

Figure 22 Light grid monitoring/manual, monitored start

Key:

S2	Manual reset device
K1/K2	Force-guided contactors

18 Attachment

18.1 Using PSR devices at altitudes greater than 2000 m above sea level

The following section describes the special conditions for using PSR devices at altitudes greater than 2000 m above sea level. Observe the relevant device-specific data (technical data, derating, etc.) according to the product documentation for the individual device.

Using the device at altitudes **greater than 2000 m above sea level up to max. 4500 m above sea level** is possible under the following conditions:

1. Limit the rated control circuit supply voltage (U_S) in accordance with the table below. Observe the technical data for the device.

U_S according to the technical data for the device	U_S when used at altitudes greater than 2000 m above sea level
< 150 V AC/DC	U_S according to the technical data for the device still valid
> 150 V AC/DC	Limited to max. 150 V AC/DC

2. Limit the maximum switching voltage in accordance with the table below. Observe the technical data for the device.

Max. switching voltage according to the technical data for the device	Max. switching voltage when used at altitudes greater than 2000 m above sea level
< 150 V AC/DC	Max. switching voltage according to the technical data for the device still valid
> 150 V AC/DC	Limited to max. 150 V AC/DC

3. Reduce the maximum ambient temperature for operation by the corresponding factor in accordance with the table below.
4. If derating is specified, offset all the points of the derating curve by the corresponding factor in accordance with the table below.

Altitude above sea level	Temperature derating factor
2000 m	1
2500 m	0.953
3000 m	0.906
3500 m	0.859
4000 m	0.813
4500 m	0.766

Example calculation for 3000 m

The following calculation and the illustrated derating curve are provided as examples. Perform the actual calculation and offset the derating curve for the device used according to the technical data and the “Derating” section.

27 °C • 0.906 ≈ 24 °C

55 °C • 0.906 ≈ 49 °C

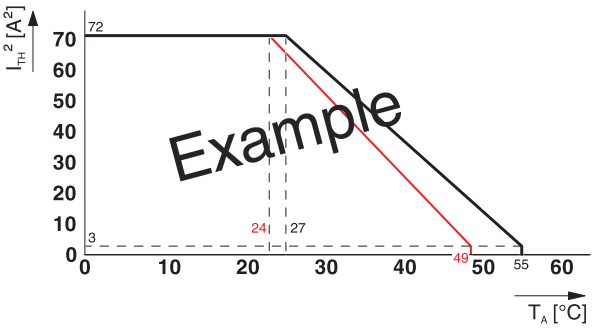

Figure 23 Example of a suspended derating curve (red)

18.2 Revision history

Version	Date	Contents
00	2016-10-17	First publication
01	2016-12-16	Technical data: Filter time at A1 inserted, interrupting rating revised; section calculating the power dissipation revised