

Features

- Long life carbon element
- Assortment of resistance tapers
- 100 mm travel length
- Touch sense lever
- PC terminals or snap-in connector option

BOURNS® PRO AUDIO

PSM Series Motorized Slide Potentiometer

Electrical Characteristics

Standard Resistance Range ..... 1K ohms to 1 megohm
Standard Resistance Tolerance... ±20 %
End Resistance ..... 20 ohms max.
Insulation Resistance @ 250 VDC ..... 100 megohms min.
Dielectric Withstanding Voltage ..... 250 VAC
Standard Taper ..... Linear, Audio
Power Rating - Linear..... 0.5 watt
Power Rating - Audio ..... 0.25 watt
Slider Noise ..... 47 mV max.
Touch Sense Track
Conductive Resistance
  Snap-in Connector..... 2 ohms max.
  PC Terminal
    TR > 30k ohms...0.1 % of TR max.
    TR ≤ 30k ohms..... 30 ohms max.

Environmental Characteristics

Operational Life .....100,000 cycles
  TR Shift ..... ±15 %
Operating Temperature Range ..... -10 °C to +55 °C
Resistance to Solder Heat..... ±5 %

Mechanical Characteristics

Mechanical Travel ..... See Product Dimensions
Operating Force ..... 30-130 gf
Stop Strength ..... 5 kgf min.
Shaft Wobble.. 2(2 x L/25) mm p-p max.
Soldering Condition
  Manual .....350 °C ±5 °C for 3 sec.
  Wave .....260 °C ±5 °C for 5 sec.
  Wash .....Not recommended

Motor Drive Characteristics

Rated Voltage.....10 VDC
Operating Voltage Supply .. 6 to 11 VDC
Starting Current.....800 mA max.
Starting Force @ 10 VDC.....20 gf
Lever Speed @ 10 VDC ..... 20 mm/0.1 sec.

Product Dimensions

PC Terminals

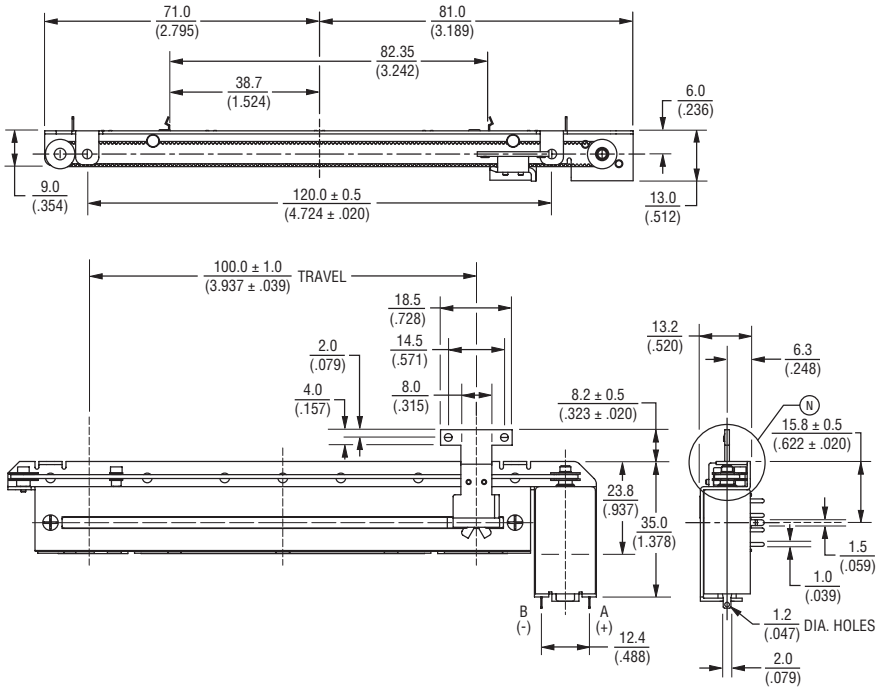

Mounting Hole Detail

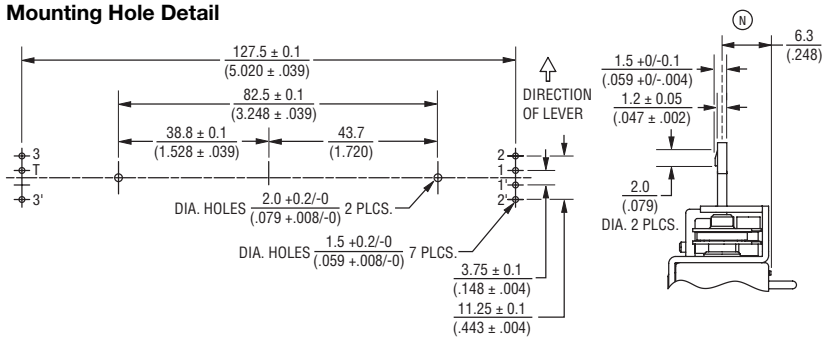

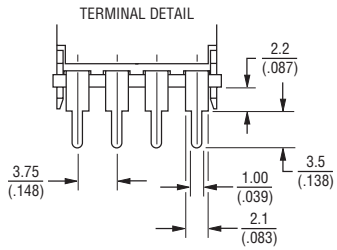

DIMENSIONS: MM / (INCHES)

*RoHS Directive 2002/95/EC Jan 27, 2003 including Annex.
Specifications are subject to change without notice.
Customers should verify actual device performance in their specific applications.

Applications

- Audio mixing consoles
- Broadcast mixing consoles

PSM Series Motorized Slide Potentiometer

BOURNS®

Product Dimensions

Snap-in Connector

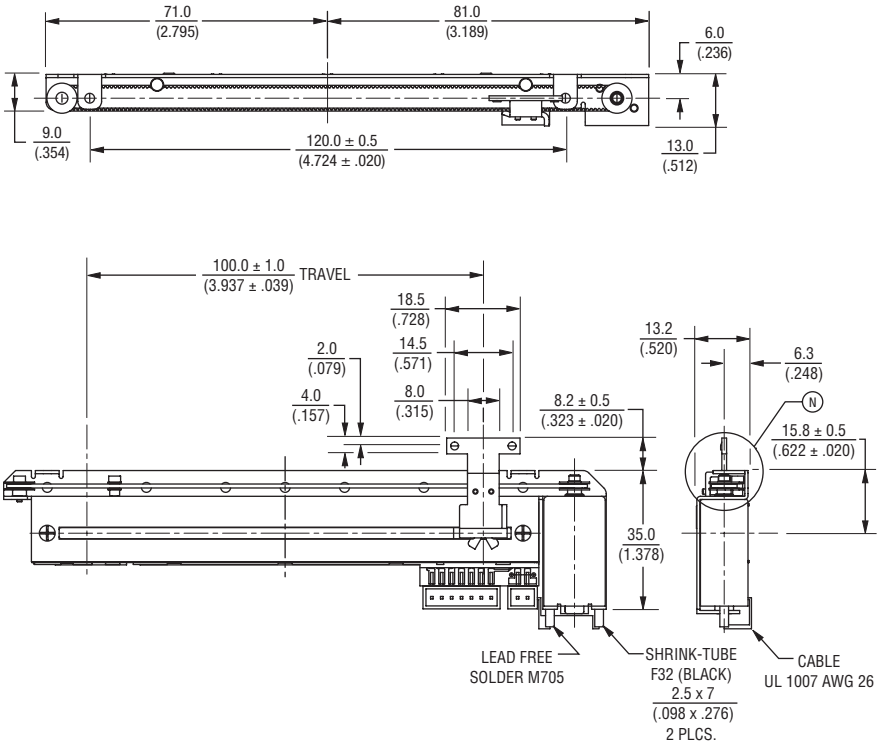

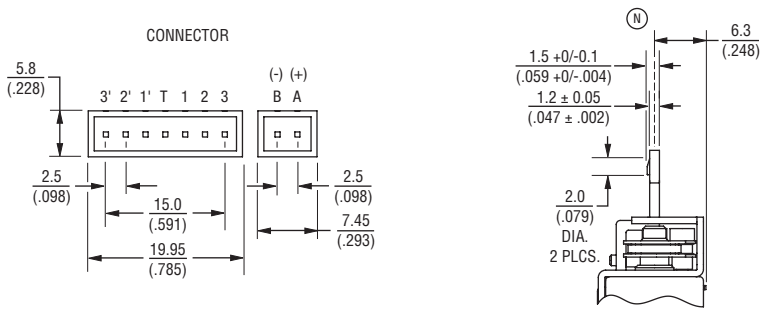

DIMENSIONS: MM / (INCHES)

Tapers

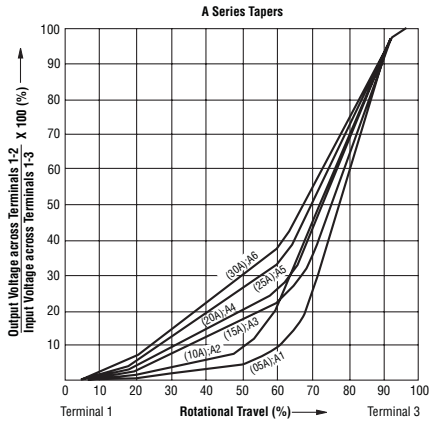

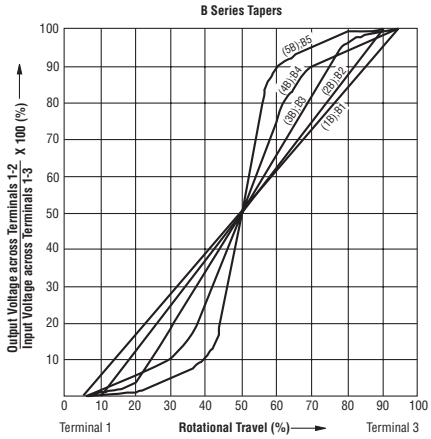

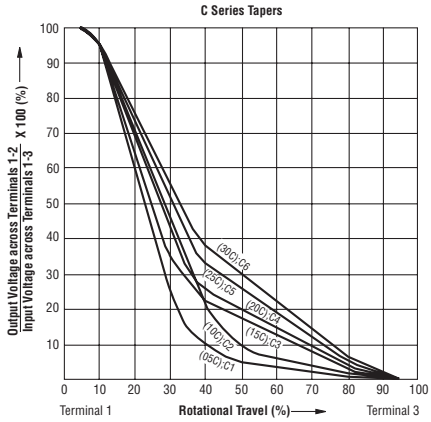

Specifications are subject to change without notice.
Customers should verify actual device performance in their specific applications.

PSM Series Motorized Slide Potentiometer

BOURNS®

Schematics

Motor

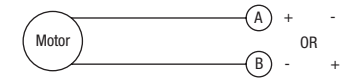

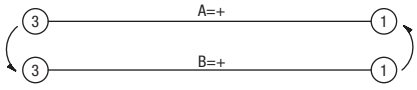

Line Track (R1)

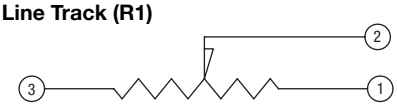

Servo Track (R2)

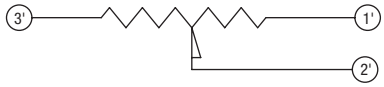

Touch Sense Track



Standard Resistance Table

Resistance (Ohms)	Resistance Code
1,000	102
2,000	202
5,000	502
10,000	103
20,000	203
50,000	503
100,000	104
200,000	204
500,000	504
1,000,000	105

How To Order

PSM 01 - 08 2 A - 103 B2

Model Number Designator
PSM = Motorized Slide Potentiometer

Length of Travel
01 = 100 mm

Lever Length
08 = 8.2 mm

Terminal Type
1 = PC Terminals
2 = Snap-in Connector

Lever End Style
A = Metal Lever (Refer to Drawing)

Resistance Code
(See Standard Resistance Table)

Resistance Taper (See Taper Charts)
Taper Series followed by Curve Number

Servo Track Output Chart

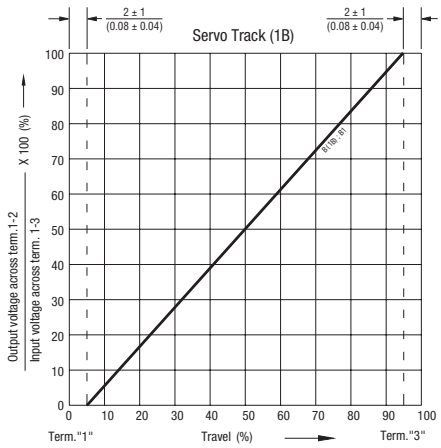

REV. 01/14

Specifications are subject to change without notice.
Customers should verify actual device performance in their specific applications.