**PSM-2B series**

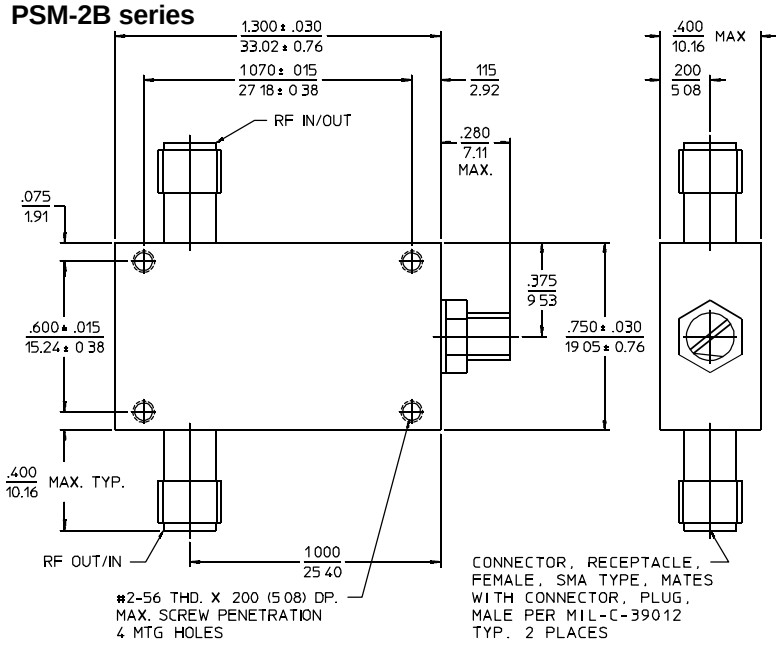


**PSM-2C series**

NOTES:
1. Tolerance on 3 place decimals ±.020(.51) except as noted.
2. Insertion phase increases with clockwise rotation of screw.
3. Dimensions in inches over millimeters.

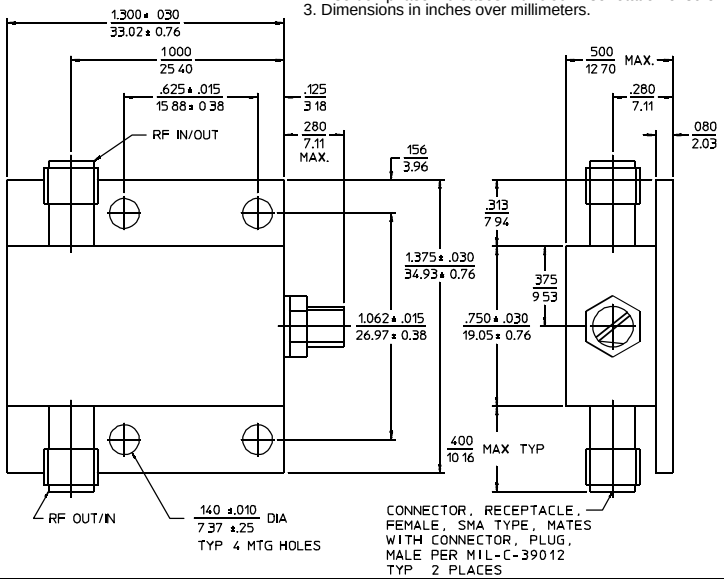


## *PRINCIPAL SPECIFICATIONS*

| Tapped Version | Flange Version | Center Frequency, $f_o$, MHz |
|---|---|---|
| PSM-2B-***B | PSM-2C-***B | 10 to 500 |
| PSM-2B-***B | PSM-2C-***B | 500 to 1000 |

For complete Model Number replace *** with desired Center Frequency, $f_o$ in MHz.

## *GENERAL SPECIFICATIONS*

| | |
|---|---|
| Phase Shift Range: | 90° min. @ $f_o$ |
| Usable Bandwidth: | $f_o \pm 5\%$ |
| Insertion Loss: | 1.5 dB max. |
| Impedance: | 50 Ω nom. |
| VSWR: < 500 MHz: | 1.6:1 max. |
| > 500 MHz: | 1.8:1 max. |
| Screw Drive: | Multi-Turn |
| Turns for maximum phase shift: | |
| CW Power: | 0.5 Watts max. |
| Connectors: | SMA Female |
| Weight, nominal: | 2 oz (58 g) |
| Operating Temp: | – 55° to +85°C |

**General Notes:**

1. The PSM-2B and PSM-2C series provide continuously variable phase adjustment using a precision multi-turn screw from 0° to 90°. The packages are compact and sturdy.

2. These phase shifters employ lumped element quadrature hybrids with capacitor tuned LC networks acting as sliding short circuits on the outputs. The electrical length of the short effectively delays the reflected signal which appears at the isolated port of the quadrature hybrid.

3. Similar phase shifters are available in a variety of connectorized packages, as well as electronically tuned models in flatpacks, surface mount packages and Meri-Pacs.

15Feb96