Single Phase Half Controlled Bridges

PSBH 50

I_{dAV} = 53 A
V_{RRM} = 400-1600 V

Preliminary Data Sheet

V_{RSM} V_{DSM}	V_{RRM} V_{DRM}	Type
500	400	PSBH 50/04
900	800	PSBH 50/08
1300	1200	PSBH 50/12
1500	1400	PSBH 50/14
*1700	*1600	PSBH 50/16

* Delivery on request

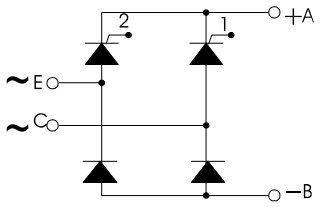



Symbol	Test Conditions			Maximum Ratings	
I_{dAV}	T_C = 85 °C	180° sine, per module		53	A
I_{TSM}, I_{FSM}	T_{VJ} = 45°C	t = 10 ms	(50 Hz), sine	550	A
	V_R = 0	t = 8.3 ms	(60 Hz), sine	600	A
	T_{VJ} = T_{VJM}	t = 10 ms	(50 Hz), sine	500	A
	V_R = 0	t = 8.3 ms	(60 Hz), sine	550	A
$\int i^2 dt$	T_{VJ} = 45°C	t = 10 ms	(50 Hz), sine	1520	A^2 s
	V_R = 0	t = 8.3 ms	(60 Hz), sine	1520	A^2 s
	T_{VJ} = T_{VJM}	t = 10 ms	(50 Hz), sine	1250	A^2 s
	V_R = 0	t = 8.3 ms	(60 Hz), sine	1250	A^2 s
$(di/dt)_{cr}$	T_{VJ} = T_{JVM}	repetitive, I_T = 50 A		150	A/µs
	f = 50Hz, t_P = 200µs				
	V_D = 2/3 V_{DRM}				
	I_G = 0.3 A	non repetitive, I_T = ½ · I_{dAV}		500	A/µs
	di_G/dt = 0.3 A/µs				
$(dv/dt)_{cr}$	T_{VJ} = T_{VJM}	V_{DR} = 2/3 V_{DRM}		1000	V/µs
	R_{GK} = ∞, method 1 (linear voltage rise)				
P_{GM}	T_{VJ} = T_{VJM}	t_P = 30µs		≤ 10	W
	I_T = I_{TAVM}	t_P = 500µs		≤ 5	W
P_{GAVM}				0.5	W
V_{RGM}				10	V
T_{VJ}				-40 ... + 125	°C
T_{VJM}				125	°C
T_{stg}				-40 ... + 125	°C
V_{ISOL}	50/60 HZ, RMS	t = 1 min		2500	V ~
	I_{ISOL} ≤ 1 mA	t = 1 s		3000	V ~
M_d	Mounting torque		(M5)	2 - 2.5	Nm
Weight	typ.			100	g

Features
- Package with fast-on terminals
- Isolation voltage 3000 V~
- Planar glasspassivated chips
- Low forward voltage drop
- UL registered E 148688

Applications
- Heat and temperature control for industrial furnaces and chemical processes
- Lighting control
- Motor control
- Power converter

Advantages
- Easy to mount with two screws
- Space and weight savings
- Improved temperature and power cycling capability
- High power density

Package, style and outline
Dimensions in mm (1mm = 0.0394“)

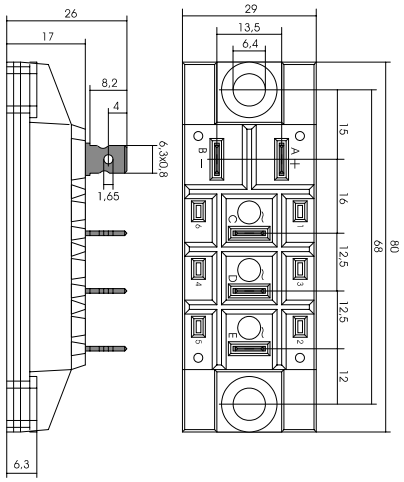

POWERSEM GmbH, Walpersdorfer Str. 53
91126 D- Schwabach
Phone: 09122 - 9764-0 Fax.: 09122 - 9764-20

© 2002 POWERSEM reserves the right to change limits, test conditions and dimensions

Symbol	Test Conditions		Characteristic Value		
I_D, I_R	$T_{VJ} = T_{VJM}$, $V_R = V_{RRM}$, $V_D = V_{DRM}$		≤	5	mA
V_T, V_F	I_T, I_F = 80A, T_{VJ} = 25°C		≤	1.64	V
V_{TO}	For power-loss calculations only ($T_{VJ} = T_{VJM}$)			0.85	V
r_T				11	mΩ
V_{GT}	V_D = 6V	T_{VJ} = 25°C	≤	1.5	V
		T_{VJ} = -40°C	≤	1.6	V
I_{GT}	V_D = 6V	T_{VJ} = 25°C	≤	100	mA
		T_{VJ} = -40°C	≤	200	mA
V_{GD}	$T_{VJ} = T_{VJM}$	V_D = 2/3 V_{DRM}	≤	0.2	V
I_{GD}	$T_{VJ} = T_{VJM}$	V_D = 2/3 V_{DRM}	≤	5	mA
I_L	T_{VJ} = 25°C, t_P = 10µs		≤	450	mA
	I_G = 0.45A, di_G/dt = 0.45A/µs				
I_H	T_{VJ} = 25°C, V_D = 6V, R_{GK} = ∞		≤	200	mA
t_{gd}	T_{VJ} = 25°C, V_D = ½ V_{DRM}		≤	2	µs
	I_G = 0.45A, di_G/dt = 0.45A/µs				
t_q	$T_{VJ} = T_{VJM}$, I_T = 20A, t_P = 200µs, V_R = 100V			250	µs
	-di/dt = 10A/µs, dv/dt = 15V/µs, V_D = 2/3 V_{DRM}				
R_{thJC}	per thyristor/Diode; DC			0.9	K/W
	per module			0.225	K/W
R_{thJK}	per thyristor/Diode; DC			1.1	K/W
	per module			0.275	K/W
d_S	Creeping distance on surface			16.1	mm
d_A	Creeping distance in air			7.1	mm
a	Max. allowable acceleration			50	m/s^2

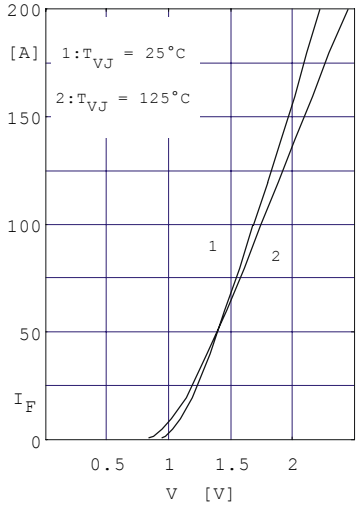

Fig. 1 Forward current vs. voltage drop per diode or thyristor

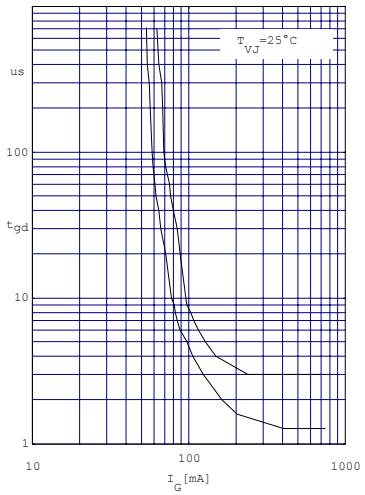

Fig. 2 Gate trigger delay time

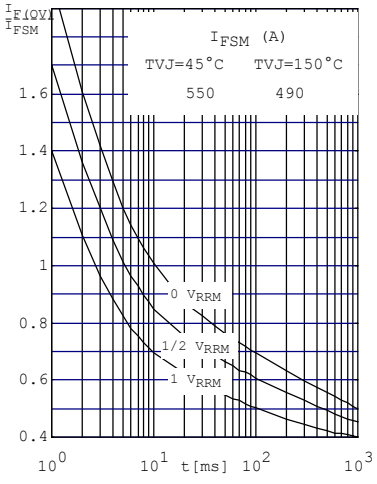

Fig. 3 Surge overload current per diode (or thyristor) I_{FSM}, I_{TSM}: Crest value t: duration

POWERSEM GmbH, Walpersdorfer Str. 53
91126 D- Schwabach
Phone: 09122 - 9764-0 Fax.: 09122 - 9764-20

© 2002 POWERSEM reserves the right to change limits, test conditions and dimensions

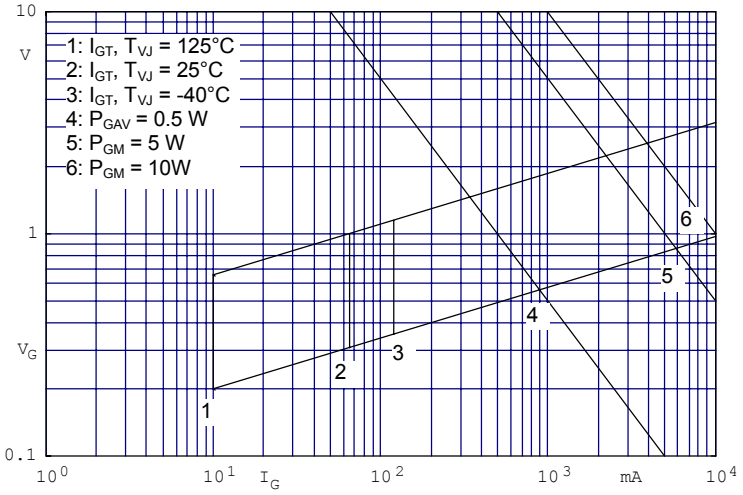

Fig.4 Gate trigger characteristic

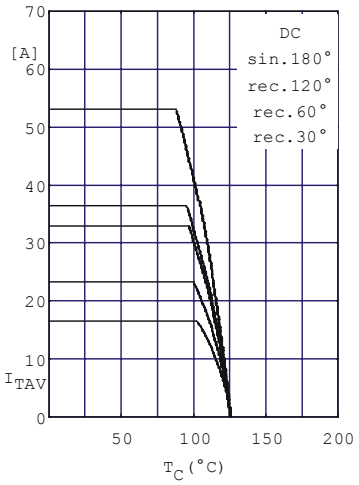

Fig.5 Maximum forward current at case temperature

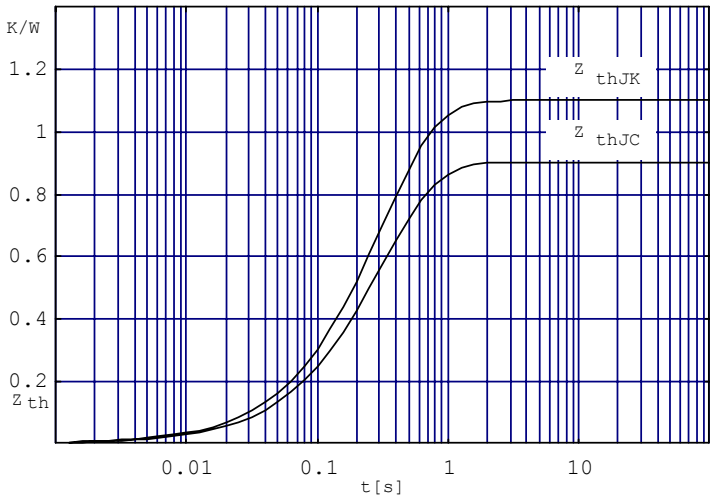

Fig.6 Transient thermal impedance per thyristor or diode (calculated)

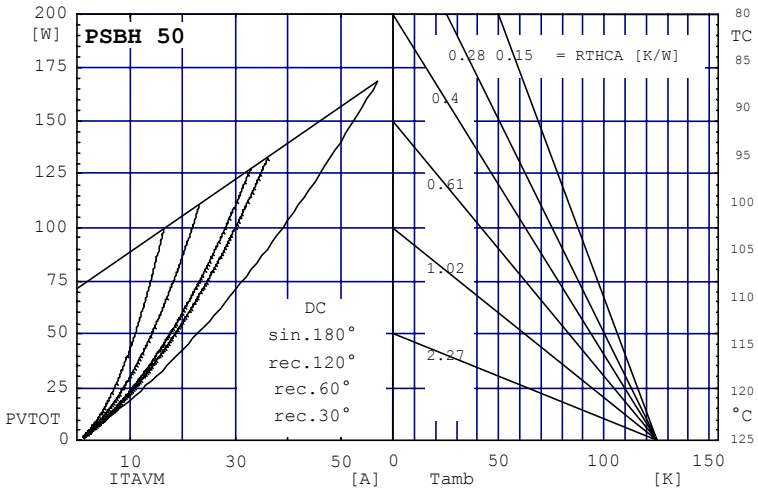

Fig. 7 Power dissipation vs. direct output current and ambient temperature

POWERSEM GmbH, Walpersdorfer Str. 53
91126 D- Schwabach
Phone: 09122 - 9764-0 Fax.: 09122 - 9764-20
© 2002 POWERSEM reserves the right to change limits, test conditions and dimensions