

E199779 LEVEL3

Size:
1.44 x 1.06 x 0.67 inches
36.5 x 27.0 x 17.1 mm

Weight:
0.92oz (26g)

FEATURES

- RoHS Compliant
- Isolation Class II
- Up to 4 Watts Output Power
- Low Ripple and Noise
- Single and Dual Outputs
- UL/cUL and CE Approvals
- PCB Mountable Switching Power Supply
- Fully Encapsulated Plastic Case
- -40°C to +70°C Operating Temperature Range
- Universal Input Voltage Range: 90-305VAC (120-430VDC)
- Short Circuit, Over Power, and Over Voltage Protection
- < 0.3W No Load Input Power

DESCRIPTION

The PSAOCH series of AC/DC switching power supplies provides up to 4 watts of output power in a 1.44" x 1.06" x 0.67" encapsulated PCB mountable package. This series consists of single and dual output models with a universal input range of 90-305VAC (120-430VDC). Some features include low ripple and noise, -40°C to +70°C operating temperature range, and over power, over voltage, and short circuit protection. All models are RoHS compliant and have UL/cUL and CE safety approvals.

MODEL SELECTION TABLE

SINGLE OUTPUT MODELS

Model Number	Input Voltage	Output Voltage	Output Current		Ripple & Noise [2]	Line Regulation	Load Regulation (0% - 100%)	Output Power	Efficiency	Maximum Capacitive Load
			Min Load	Max Load						
PSAOCH-3.3S	90~305 VAC (120~430 VDC)	3.3 VDC	0mA	1200mA	250mVp-p	±0.5%	±1.5%	3.96W	68%	14,000µF
PSAOCH-5S		5 VDC	0mA	800mA	200mVp-p	±0.2%	±0.5%	4W	72%	8,000µF
PSAOCH-8S		8 VDC	0mA	500mA	150mVp-p	±0.2%	±0.5%	4W	74%	2700µF
PSAOCH-9S		9 VDC	0mA	444mA	100mVp-p	±0.2%	±0.5%	4W	75%	2400µF
PSAOCH-12S		12 VDC	0mA	333mA	100mVp-p	±0.2%	±0.5%	4W	76%	1000µF
PSAOCH-14S		14 VDC	0mA	286mA	100mVp-p	±0.2%	±0.5%	4W	76%	750µF
PSAOCH-15S		15 VDC	0mA	267mA	100mVp-p	±0.2%	±0.5%	4W	76%	700µF
PSAOCH-24S		24 VDC	0mA	167mA	100mVp-p	±0.2%	±0.5%	4W	77%	220µF

DUAL OUTPUT MODELS

Model Number		Input Voltage	Output Voltage	Output Current		Ripple & Noise [2]	Line Regulation	Load Regulation (25% - 100%)	Output Power	Efficiency	Maximum Capacitive Load
				Min Load[1]	Max Load						
PSAOCH-5S3.3S	Vo	90~305 VAC (120~430 VDC)	5 VDC	150mA	600mA	200mVp-p	±0.2%	±0.5%	3.5W	72%	5600µF
	Vr		3.3 VDC	37.5mA	150mA		±3%	±5%			4700µF
PSAOCH-8S5S	Vo		8 VDC	93.8mA	375mA	150mVp-p	±0.2%	±0.5%	3.6W	74%	1000µF
	Vr		5 VDC	30mA	120mA		±3%	±5%			4700µF
PSAOCH-12S5S	Vo		12 VDC	62.5mA	250mA	100mVp-p	±0.2%	±0.5%	3.6W	75%	330µF
	Vr		5 VDC	30mA	120mA		±3%	±5%			4700µF

NOTES

1. Dual output models require a minimum loading on the output to maintain specified regulations. Operation under no-load conditions will not damage these devices; however, they may not meet all listed specifications.
2. Ripple & Noise is measured 20MHz limited bandwidth and with 0.1µF and 47µF capacitors in parallel across the output.

Wall Industries, Inc. • 5 Watson Brook Road, Exeter, NH 03833 • Tel: 603-778-2300 • Toll Free: 888-597-9255 • Fax 603-778-9797
website: www.wallindustries.com • e-mail: sales@wallindustries.com

SPECIFICATIONS: PSAOCH SERIES

All specifications are based on 25°C, Nominal Input Voltage, and Maximum Output Current unless otherwise noted.
We reserve the right to change specifications based on technological advances.

SPECIFICATION	TEST CONDITIONS		Min	Typ	Max	Unit
INPUT SPECIFICATIONS						
Input Voltage	AC input voltage range		90		305	VAC
	DC input voltage range		120		430	VDC
Input Frequency			47		440	Hz
Input Current	At 115VAC and full load	Single Output Models			75	mA
	At 230VAC and full load				55	
	At 115VAC and full load	Dual Output Models			85	mA
	At 230VAC and full load				65	
Inrush Current (<500µs)	At 115VAC				15	A
	At 230VAC				25	
External Fuse (recommended)			3.15A slow blow type			
OUTPUT SPECIFICATIONS						
Output Voltage			See Table			
Voltage Accuracy	Single Output Models		-2		+2	%
	Dual Output Models	Vo:	-2		+2	%
		Vr:	-5		+5	
Line Regulation	Low Line to High Line		See Table			
Load Regulation			See Table			
Output Power			See Table			
Output Current			See Table			
Minimum Load	Single Output Models		0			%
	Dual Output Models		25			
Ripple & Noise	Measured at 20MHz BW with 0.1µF and 47µF capacitors in parallel		See Table			
Max Capacitive Load			See Table			
Hold-Up Time			15			ms
Temperature Coefficient				±0.02		%/°C
PROTECTION						
Short Circuit Protection			Hiccup mode, indefinite (auto-recovery)			
Over Voltage Protection			Zener diode clamp			
Over Power Protection			Hiccup mode, auto-recovery			
GENERAL SPECIFICATIONS						
Efficiency			See Table			
Switching Frequency			124	132	140	KHz
Isolation Voltage (Input to Output)			3000			VAC
Leakage Current					0.25	mA
ENVIRONMENTAL SPECIFICATIONS						
Operating Temperature	With derating (see derating curve)		-40		+70	°C
Storage Temperature			-40		+85	°C
Humidity					95	% RH
Cooling			Free air convection			
MTBF	25°C (MIL-HDBK-217F)		350,000			hours
PHYSICAL SPECIFICATIONS						
Weight			0.92oz (26g)			
Case Material			Plastic resin + fiberglass (Flammability to UL 94V-0)			
Dimensions (L x W x H)			1.44 x 1.06 x 0.67 inches (36.5 x 27.0 x 17.1 mm)			
SAFETY & EMC						
Safety Approvals			UL/cUL, CE			
EMC	EMI (Conducted and Radiated Emissions)		EN 55022 Class B			
	EMS (Noise Immunity)		EN 55024			

BLOCK DIAGRAMS

Single Output

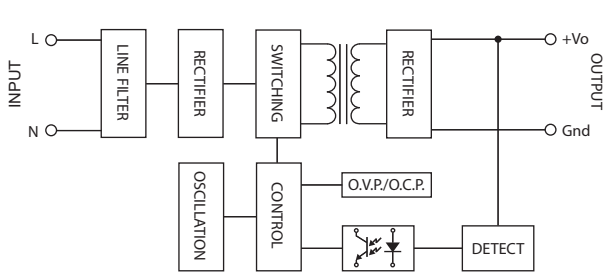

Dual Output

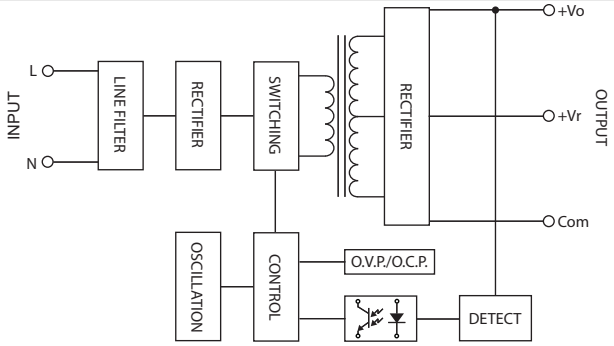

DERATING CURVES

Vin at 90~280VAC

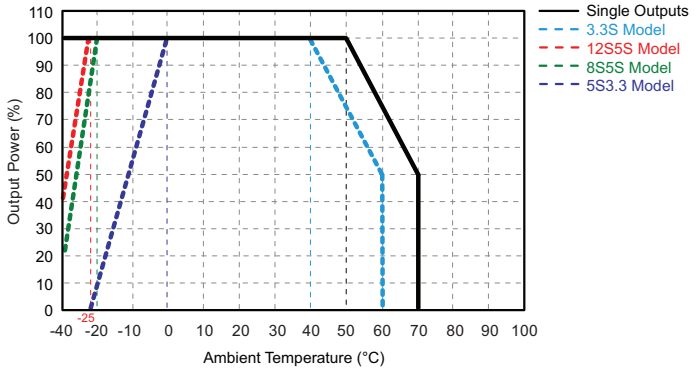

Vin at 305VAC

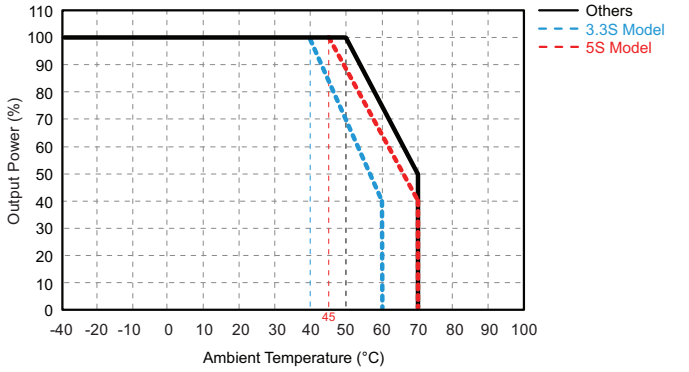

MECHANICAL DRAWING

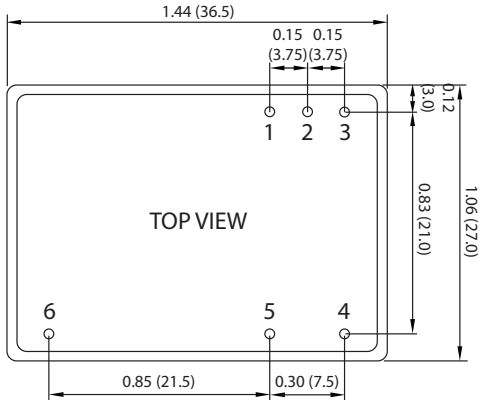

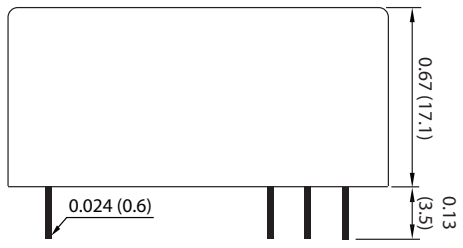

PIN CONNECTIONS		
PIN	SINGLE	DUAL
1	+Vo	+Vo
2	GND	COM
3	NC	+Vr
4	AC IN (L)	AC IN (L)
5	AC IN (N)	AC IN (N)
6	NC	NC

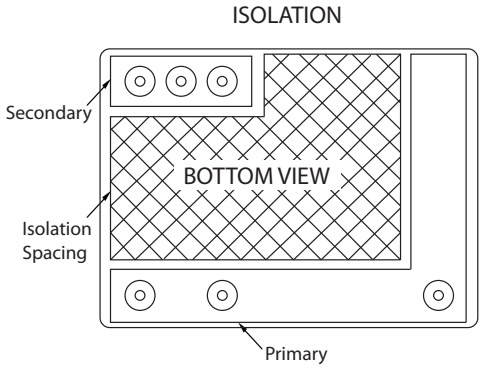

NOTES
1. Unit: inches (mm)
2. Tolerance: ±0.02 (±0.5mm)
3. All dimensions are for reference only

COMPANY INFORMATION

Wall Industries, Inc. has created custom and modified units for over 50 years. Our in-house research and development engineers will provide a solution that exceeds your performance requirements on-time and on budget. Our ISO9001-2008 certification is just one example of our commitment to producing a high quality, well-documented product for our customers.

Our past projects demonstrate our commitment to you, our customer. Wall Industries, Inc. has a reputation for working closely with its customers to ensure each solution meets or exceeds form, fit and function requirements. We will continue to provide ongoing support for your project above and beyond the design and production phases. Give us a call today to discuss your future projects.

Contact **Wall Industries** for further information:

Phone:	☎(603)778-2300
Toll Free:	☎(888)597-9255
Fax:	☎(603)778-9797
E-mail:	sales@wallindustries.com
Web:	www.wallindustries.com
Address:	5 Watson Brook Road Exeter, NH 03833