CEL

PHOTOCOUPLER
PS9122

1 Mbps OPEN COLLECTOR OUTPUT TYPE 5-PIN SOP (SO-5) HIGH-SPEED PHOTOCOUPLER

–NEPOC Series–

DESCRIPTION

The PS9122 is an optical coupled high-speed, active low type isolator containing a GaAlAs LED on the input side and a photodiode and a signal processing circuit on the output side on one chip.

The PS9122 is a high-speed digital output type photocoupler designed specifically for low circuit current.

The PS9122 is in 5-pin plastic SOP (Small Outline Package) and is suitable for high density application.

FEATURES

- Supply Voltage
  N rank: V_{CC} = 3.3 V
  L rank: V_{CC} = 5 V
- Pulse width distortion ($|t_{PHL} - t_{PLH}|$ = 200 ns MAX.)
- Small package (SO-5)
- High-speed (1 Mbps)
- High isolation voltage (BV = 3 750 Vr.m.s.)
- Open collector output
- Embossed tape product: PS9122-F3: 2 500 pcs/reel
- Pb-Free product
- ★ Safety standards
  - UL approved: File No. E72422
  - DIN EN60747-5-2 (VDE0884 Part2) approved No.40008902 (option)

APPLICATIONS

- PoE (Power over Ethernet)
- Measurement equipment
- FA Network

PIN CONNECTION
(Top View)

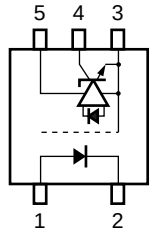

1. Anode
2. Cathode
3. GND
4. V_O
5. V_{CC}

TRUTH TABLE

LED	Output
ON	L
OFF	H

The information in this document is subject to change without notice. Before using this document, please confirm that this is the latest version.

Document No. PN10697EJ02V0DS (2nd edition)
Date Published March 2010 NS

The mark ★ shows major revised points.

The revised points can be easily searched by copying an "★" in the PDF file and specifying it in the "Find what:" field.

PACKAGE DIMENSIONS (UNIT: mm)

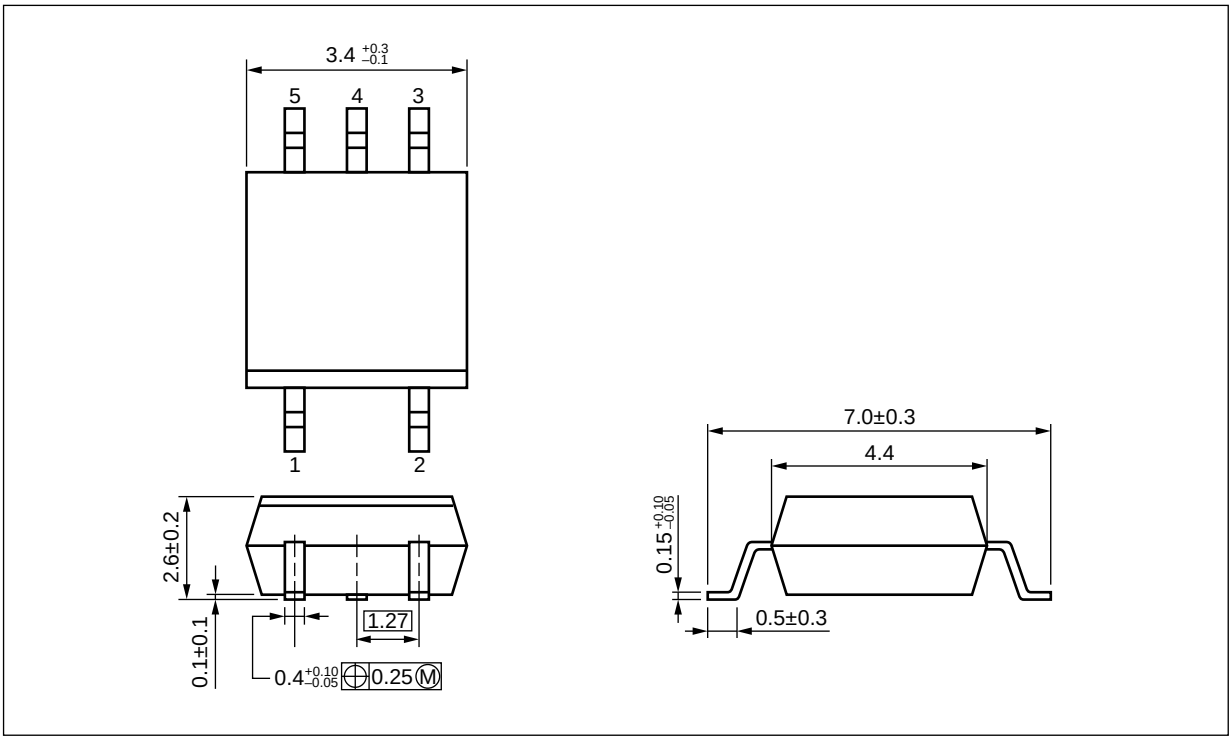

★ PHOTOCOUPLER CONSTRUCTION

Parameter	Unit (MIN.)
Air Distance	4.2 mm
Outer Creepage Distance	4.2 mm
Isolation Distance	0.2 mm

★ MARKING EXAMPLE

Ni/Pd/Au PLATING

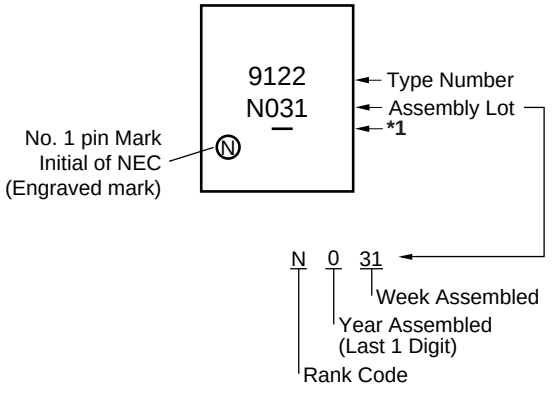

***1** Bar : Pb-Free

★ ORDERING INFORMATION

Part Number	Order Number	Rank	Solder Plating Specification	Packing Style	Safety Standards Approval	Application Part Number *1
PS9122	PS9122-AX	N*2	Pb-Free (Ni/Pd/Au)	20 pcs (Tape 20 pcs cut)	Standard products (UL approved)	PS9122
		L*3				
PS9122-F3	PS9122-F3-AX	N*2		Embossed Tape 2 500 pcs/reel		
		L*3				
PS9122-V	PS9122-V-AX	N*2		20 pcs (Tape 20 pcs cut)	DIN EN60747-5-2 (VDE0884 Part2) approved (Option)	
		L*3				
PS9122-V-F3	PS9122-V-F3-AX	N*2		Embossed Tape 2 500 pcs/reel		
		L*3				

***1** For the application of the Safety Standard, following part number should be used.

***2** N rank: V_{CC} = 3.3 V

***3** L rank: V_{CC} = 5 V

ABSOLUTE MAXIMUM RATINGS (T_A = 25°C, unless otherwise specified)

Parameter		Symbol	Ratings	Unit
Diode	Forward Current*1	I_F	25	mA
	Reverse Voltage	V_R	5	V
Detector	Supply Voltage	V_{CC}	7	V
	Output Voltage	V_O	7	V
★	Output Current	I_O	20	mA
	Power Dissipation*2	P_C	40	mW
Isolation Voltage*3		BV	3 750	Vr.m.s.
Operating Ambient Temperature		T_A	−40 to +100	°C
Storage Temperature		T_{stg}	−55 to +125	°C

★ ***1** Reduced to 0.17 mA/°C at T_A = 25°C or more.

★ ***2** Applies to output pin V_O (collector pin). Reduced to 1.5 mW/°C at T_A = 80°C or more.

***3** AC voltage for 1 minute at T_A = 25°C, RH = 60% between input and output.
Pins 1-2 shorted together, 3-5 shorted together.

RECOMMENDED OPERATING CONDITIONS

Parameter		Symbol	MIN.	TYP.	MAX.	Unit
Low Level Input Voltage		V_{FL}	0		0.8	V
High Level Input Current		I_{FH}	6.3	10	12.5	mA
Supply Voltage	N rank	V_{CC}	2.7	3.3	3.6	V
	L rank		4.5	5.0	5.5	
★ TTL (R_L = 1 kΩ, loads)		N			3	
Pull-up Resistor		R_L	330		4 k	Ω

★ DRIVER CIRCUIT

It is recommended to use some buffer for low output current controller, especially in the case of low V_{CC}, otherwise to confirm that enough input current is supplied from controller.

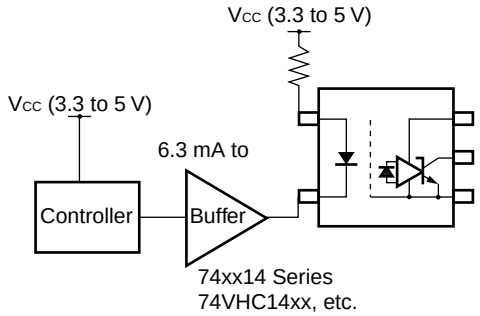

ELECTRICAL CHARACTERISTICS 1: N rank (T_A = –40 to +100°C, unless otherwise specified)

	Parameter		Symbol	Conditions	MIN.	TYP.[*1]	MAX.	Unit
	Diode	Forward Voltage	V_F	I_F = 10 mA, T_A = 25°C		1.6	1.8	V
		Reverse Current	I_R	V_R = 3 V, T_A = 25°C			10	μA
		Terminal Capacitance	C_t	V = 0 V, f = 1 MHz, T_A = 25°C		30		pF
	Detector	High Level Output Current	I_{OH}	V_{CC} = V_O = 3.3 V, V_F = 0.8 V		1	100	μA
★		Low Level Output Voltage[*2]	V_{OL}	V_{CC} = 3.3 V, I_F = 5 mA, I_{OL} = 10 mA		0.2	0.6	V
		High Level Supply Current	I_{CCH}	V_{CC} = 3.3 V, I_F = 0 mA, V_O = Open			2	mA
		Low Level Supply Current	I_{CCL}	V_{CC} = 3.3 V, I_F = 10 mA, V_O = Open			3	
★	Coupled	Threshold Input Current (H → L)	I_{FHL}	V_{CC} = 3.3 V, V_O = 0.8 V, R_L = 350 Ω		2	5	mA
		Isolation Resistance	R_{I-O}	V_{I-O} = 1 kV_{DC}, RH = 40 to 60%, T_A = 25°C	10^{11}			Ω
		Isolation Capacitance	C_{I-O}	V = 0 V, f = 1 MHz, T_A = 25°C		0.6		pF
		Propagation Delay Time (H → L)[*3]	t_{PHL}	V_{CC} = 3.3 V, R_L = 350 Ω, I_F = 7.5 mA, V_{THHL} = V_{THLH} = 1.5 V			500	ns
		Propagation Delay Time (L → H)[*3]	t_{PLH}				700	
★		Rise Time	t_r			60		ns
★		Fall Time	t_f			70		
		Pulse Width Distortion (PWD)[*3]	$\lvert t_{PHL}-t_{PLH} \rvert$				200	ns
★		Common Mode Transient Immunity at High Level Output[*4]	CM_H	V_{CC} = 3.3 V, R_L = 350 Ω, T_A = 25°C, I_F = 0 mA, V_O > 2.0 V, V_{CM} = 1.0 kV	15	20		kV/μs
★		Common Mode Transient Immunity at Low Level Output[*4]	CM_L	V_{CC} = 3.3 V, R_L = 350 Ω, T_A = 25°C, I_F = 7.5 mA, V_O < 0.8 V, V_{CM} = 1.0 kV	15	20		

ELECTRICAL CHARACTERISTICS 2: L rank (T_A = –40 to +100°C, unless otherwise specified)

	Parameter		Symbol	Conditions	MIN.	TYP.[*5]	MAX.	Unit
	Diode	Forward Voltage	V_F	I_F = 10 mA, T_A = 25°C		1.6	1.8	V
		Reverse Current	I_R	V_R = 3 V, T_A = 25°C			10	μA
		Terminal Capacitance	C_t	V = 0 V, f = 1 MHz, T_A = 25°C		30		pF
	Detector	High Level Output Current	I_{OH}	V_{CC} = V_O = 5 V, V_F = 0.8 V		1	100	μA
		Low Level Output Voltage[*6]	V_{OL}	V_{CC} = 5 V, I_F = 5 mA, I_{OL} = 13 mA		0.2	0.6	V
		High Level Supply Current	I_{CCH}	V_{CC} = 5 V, I_F = 0 mA, V_O = Open			2.5	mA
		Low Level Supply Current	I_{CCL}	V_{CC} = 5 V, I_F = 10 mA, V_O = Open			3.5	
★	Coupled	Threshold Input Current (H → L)	I_{FHL}	V_{CC} = 5 V, V_O = 0.8 V, R_L = 350 Ω		2	5	mA
		Isolation Resistance	R_{I-O}	V_{I-O} = 1 kV_{DC}, RH = 40 to 60%, T_A = 25°C	10^{11}			Ω
		Isolation Capacitance	C_{I-O}	V = 0 V, f = 1 MHz, T_A = 25°C		0.6		pF
		Propagation Delay Time (H → L)[*7]	t_{PHL}	V_{CC} = 5 V, R_L = 350 Ω, I_F = 7.5 mA, V_{THHL} = V_{THLH} = 1.5 V			500	ns
		Propagation Delay Time (L → H)[*7]	t_{PLH}				700	
★		Rise Time	t_r			60		ns
★		Fall Time	t_f			70		
		Pulse Width Distortion (PWD)[*7]	$\lvert t_{PHL}-t_{PLH} \rvert$				200	ns
★		Common Mode Transient Immunity at High Level Output[*8]	CM_H	V_{CC} = 5 V, R_L = 350 Ω, T_A = 25°C, I_F = 0 mA, V_O > 2.0 V, V_{CM} = 1.0 kV	15	20		kV/μs
★		Common Mode Transient Immunity at Low Level Output[*8]	CM_L	V_{CC} = 5 V, R_L = 350 Ω, T_A = 25°C, I_F = 7.5 mA, V_O < 0.8 V, V_{CM} = 1.0 kV	15	20		

***1, 5.** Typical values at T_A = 25°C

★ ***2, 6.** Because V_{OL} of 2 V or more may be output when LED current input and when output supply of V_{CC} = 2 V more or less, it is important to confirm the characteristics (operation with the power supply on and off) during design, before using this device.

★ ***3, 7.** Test circuit for propagation delay time

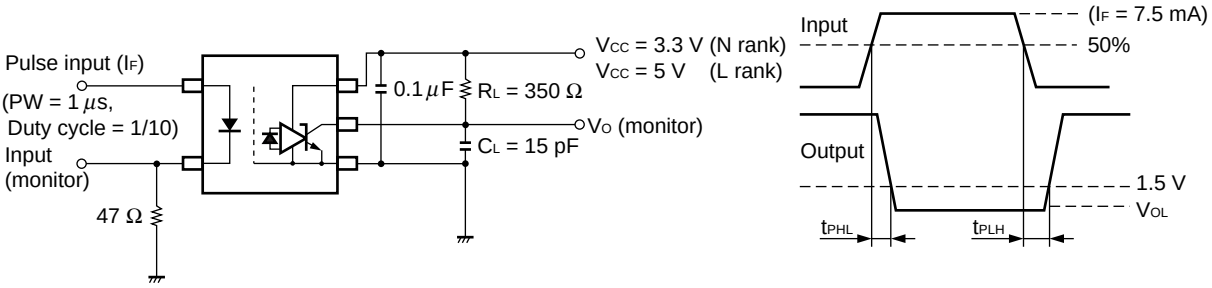

Remark C_L includes probe and stray wiring capacitance.

★ ***4, 8.** Test circuit for common mode transient immunity

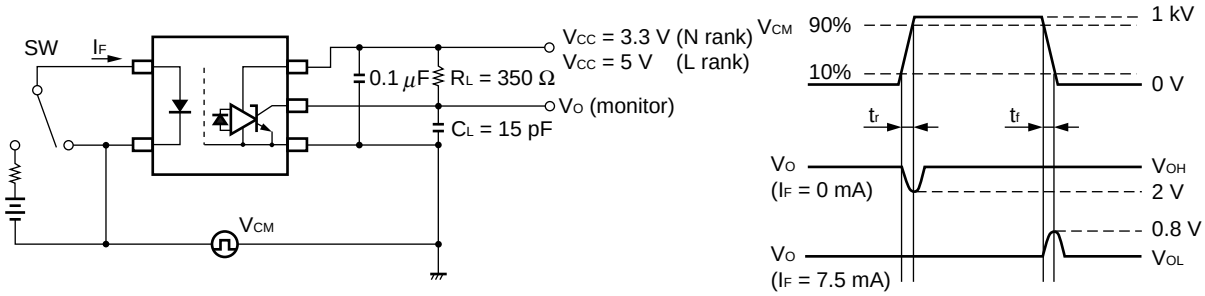

Remark C_L includes probe and stray wiring capacitance.

★ USAGE CAUTIONS

1. This product is weak for static electricity by designed with high-speed integrated circuit so protect against static electricity when handling.
2. By-pass capacitor of 0.1 μF is used between V_{CC} and GND near device. Also, ensure that the distance between the leads of the photocoupler and capacitor is no more than 10 mm.
3. Avoid storage at a high temperature and high humidity.

★ **TYPICAL CHARACTERISTICS (T_A = 25°C, unless otherwise specified)**

MAXIMUM FORWARD CURRENT vs. AMBIENT TEMPERATURE

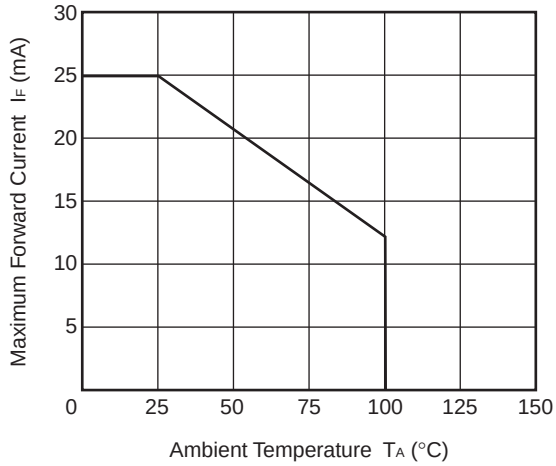

DETECTOR POWER DISSIPATION vs. AMBIENT TEMPERATURE

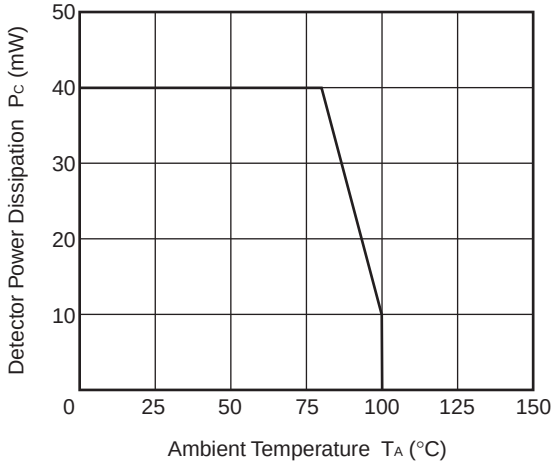

FORWARD CURRENT vs. FORWARD VOLTAGE

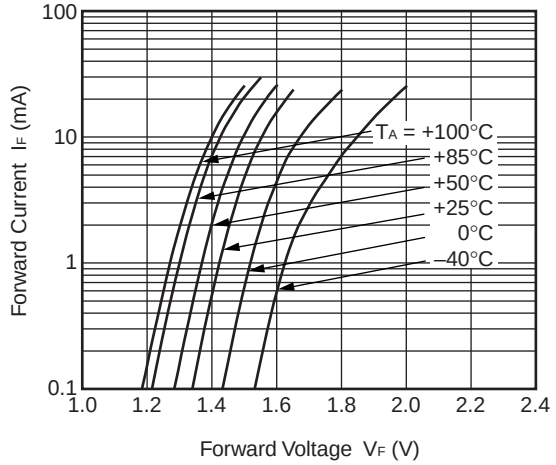

THRESHOLD INPUT CURRENT vs. AMBIENT TEMPERATURE

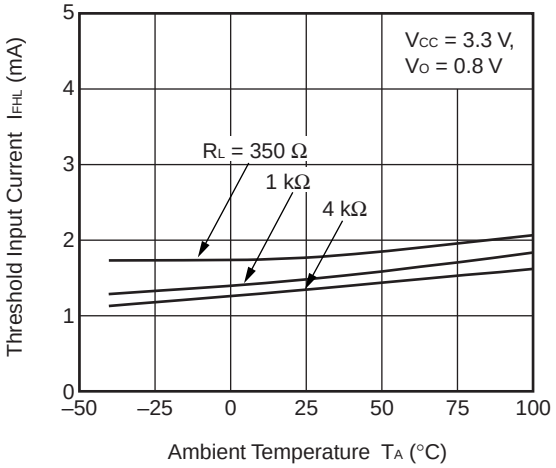

THRESHOLD INPUT CURRENT vs. AMBIENT TEMPERATURE

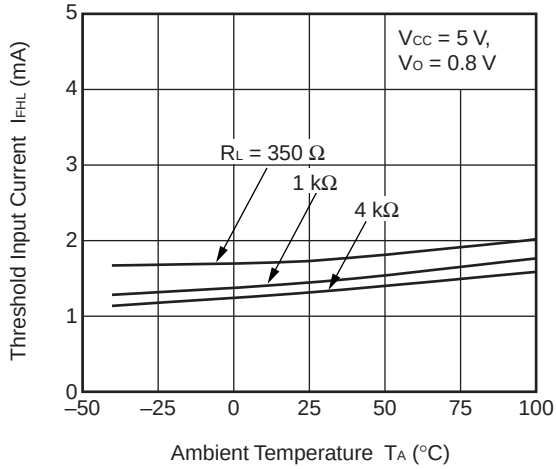

Remark The graphs indicate nominal characteristics.

SUPPLY CURRENT vs.
AMBIENT TEMPERATURE

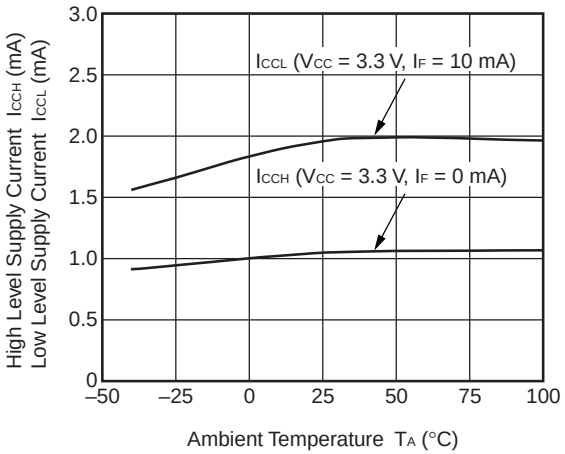

SUPPLY CURRENT vs.
AMBIENT TEMPERATURE

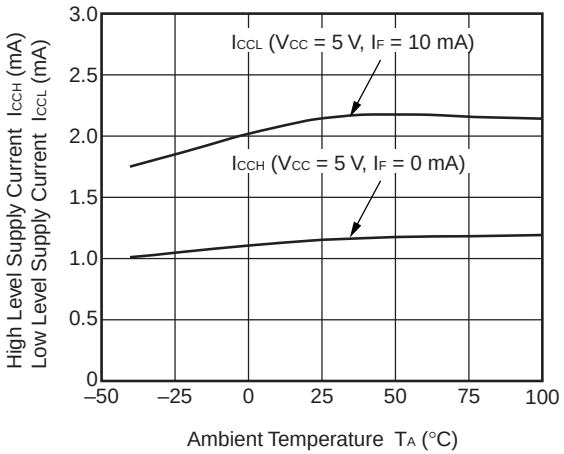

LOW LEVEL OUTPUT VOLTAGE vs.
AMBIENT TEMPERATURE

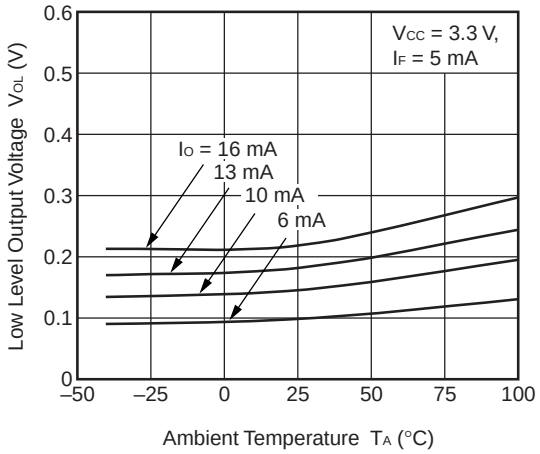

LOW LEVEL OUTPUT VOLTAGE vs.
AMBIENT TEMPERATURE

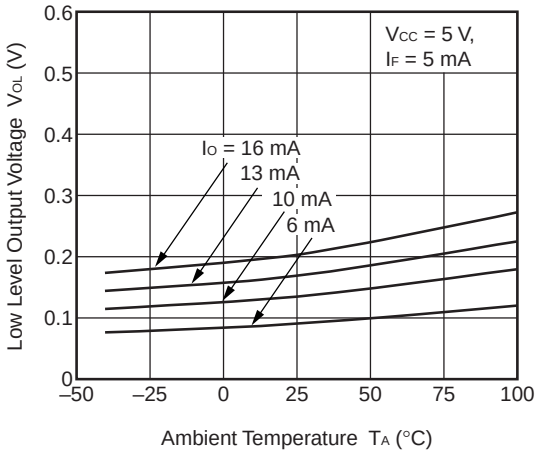

OUTPUT VOLTAGE vs. FORWARD CURRENT

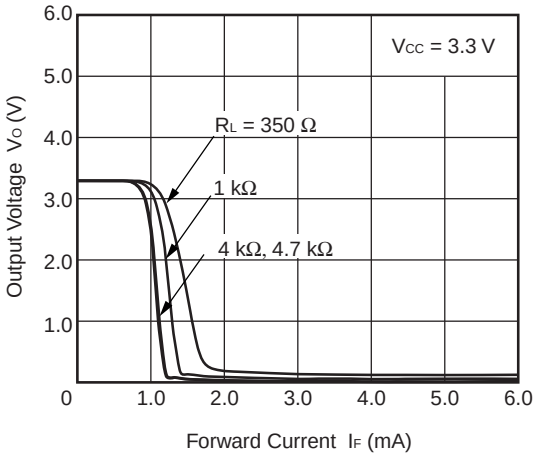

OUTPUT VOLTAGE vs. FORWARD CURRENT

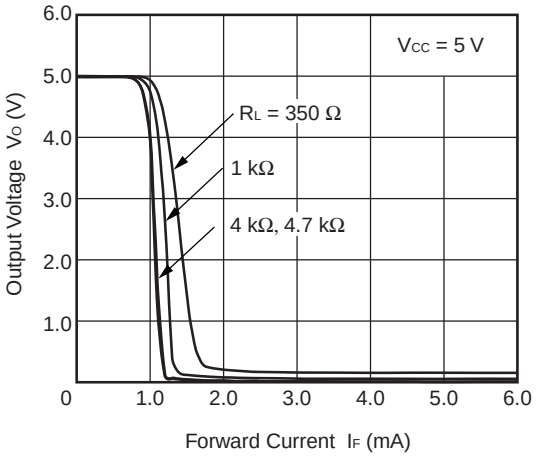

Remark The graphs indicate nominal characteristics.

PROPAGATION DELAY TIME vs.
AMBIENT TEMPERATURE

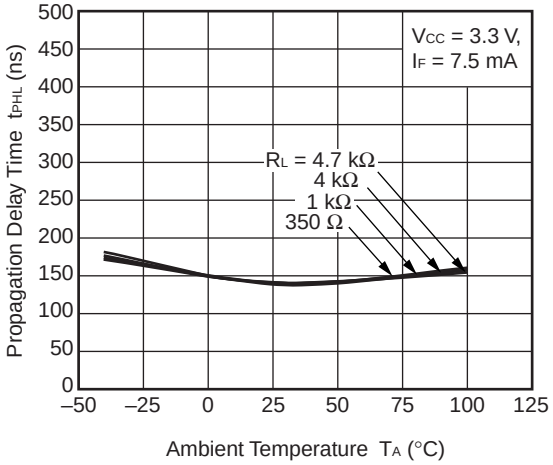

PROPAGATION DELAY TIME vs.
AMBIENT TEMPERATURE

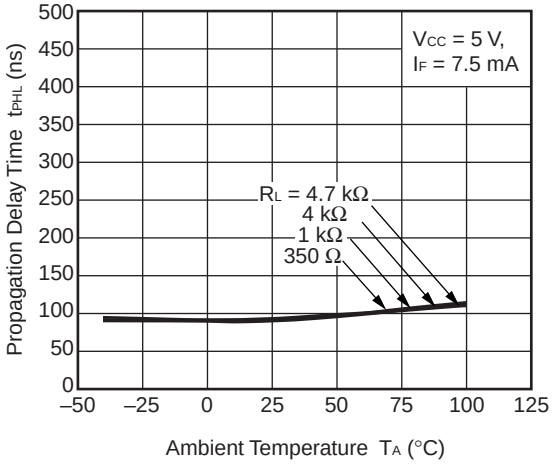

PROPAGATION DELAY TIME vs.
AMBIENT TEMPERATURE

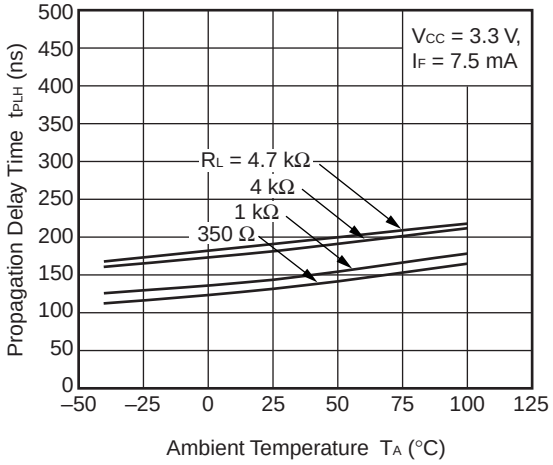

PROPAGATION DELAY TIME vs.
AMBIENT TEMPERATURE

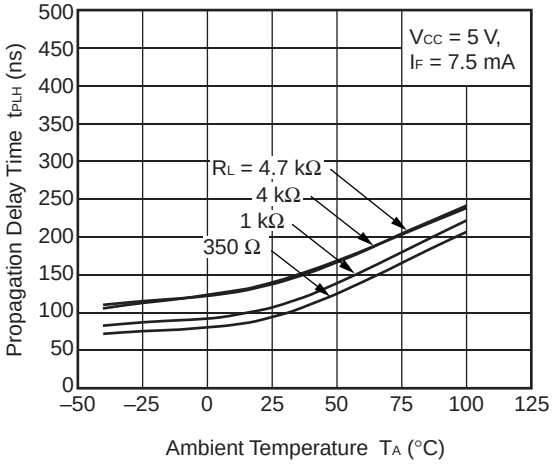

PULSE WIDTH DISTORTION vs.
AMBIENT TEMPERATURE

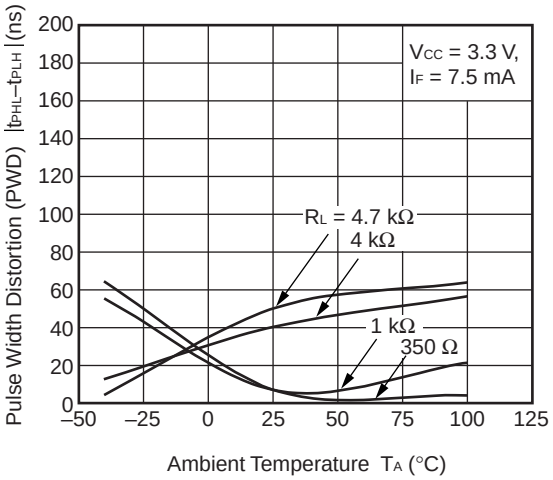

PULSE WIDTH DISTORTION vs.
AMBIENT TEMPERATURE

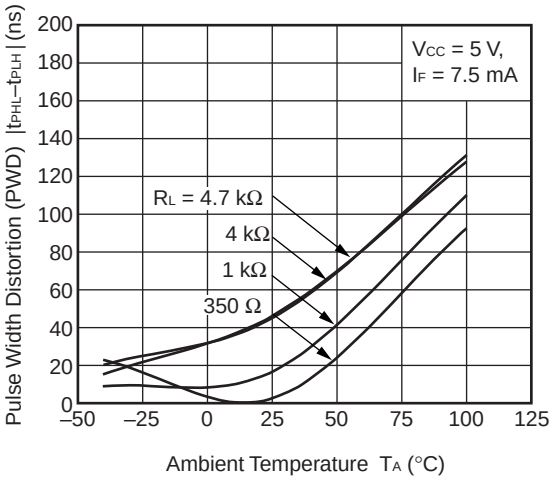

Remark The graphs indicate nominal characteristics.

SWITCHING TIME vs.
AMBIENT TEMPERATURE

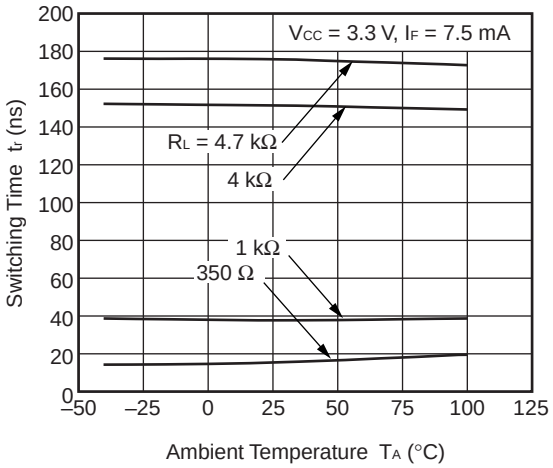

SWITCHING TIME vs.
AMBIENT TEMPERATURE

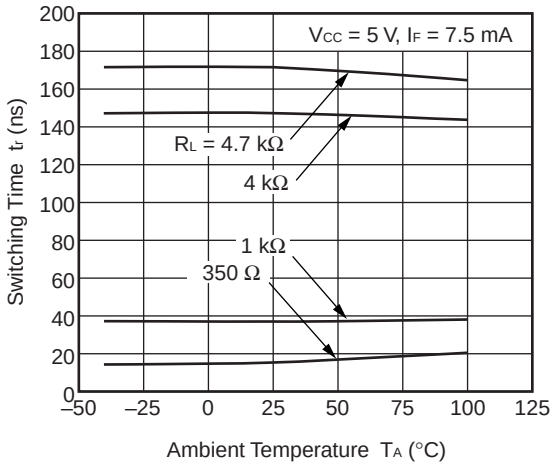

SWITCHING TIME vs.
AMBIENT TEMPERATURE

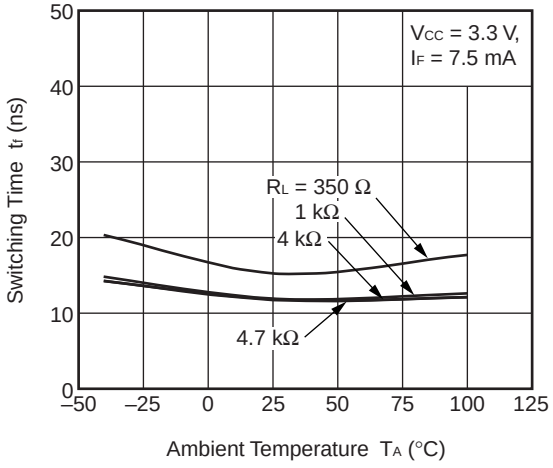

SWITCHING TIME vs.
AMBIENT TEMPERATURE

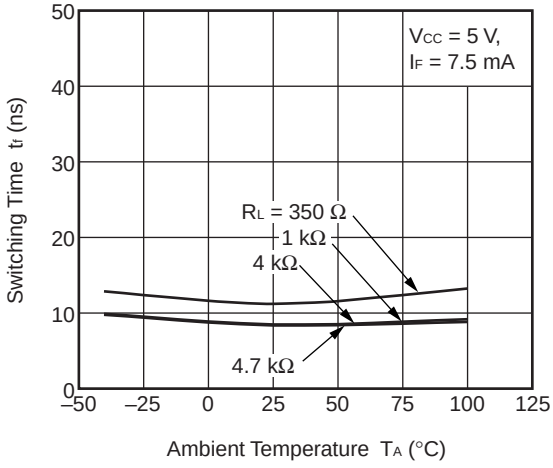

PROPAGATION DELAY TIME vs.
FORWARD CURRENT

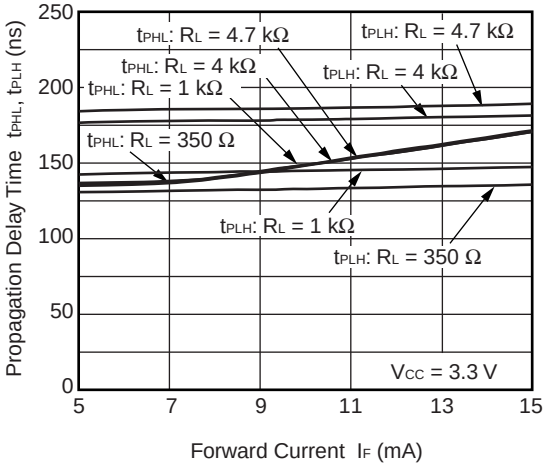

PROPAGATION DELAY TIME vs.
FORWARD CURRENT

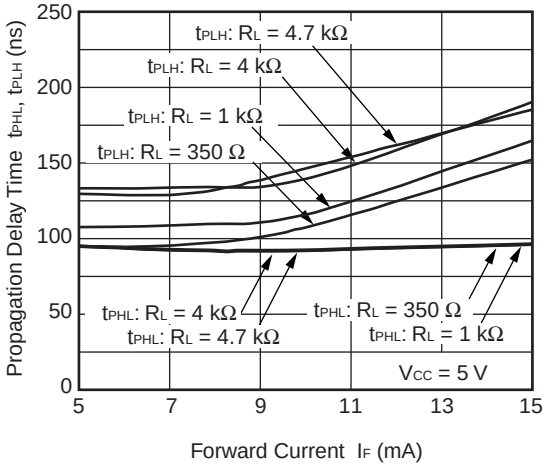

Remark The graphs indicate nominal characteristics.

TAPING SPECIFICATIONS (UNIT: mm)

Outline and Dimensions (Tape)

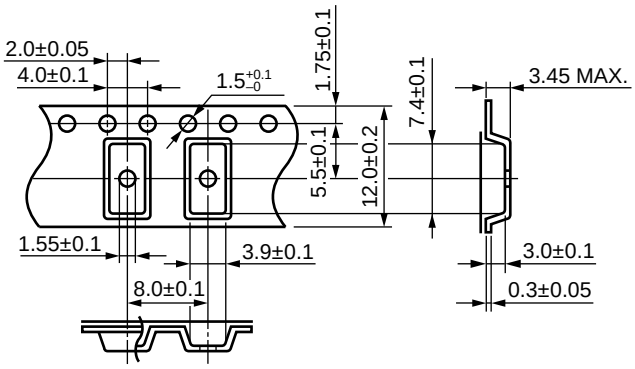

Tape Direction

PS9122-F3

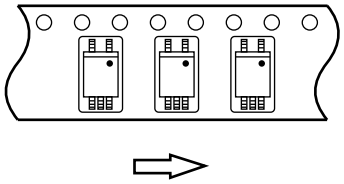

Outline and Dimensions (Reel)

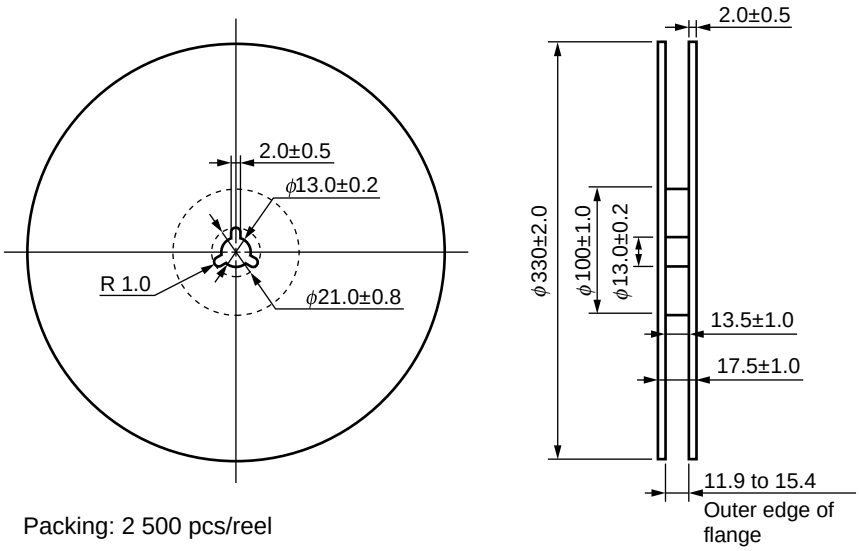

Packing: 2 500 pcs/reel

★ **RECOMMENDED MOUNT PAD DIMENSIONS (UNIT: mm)**

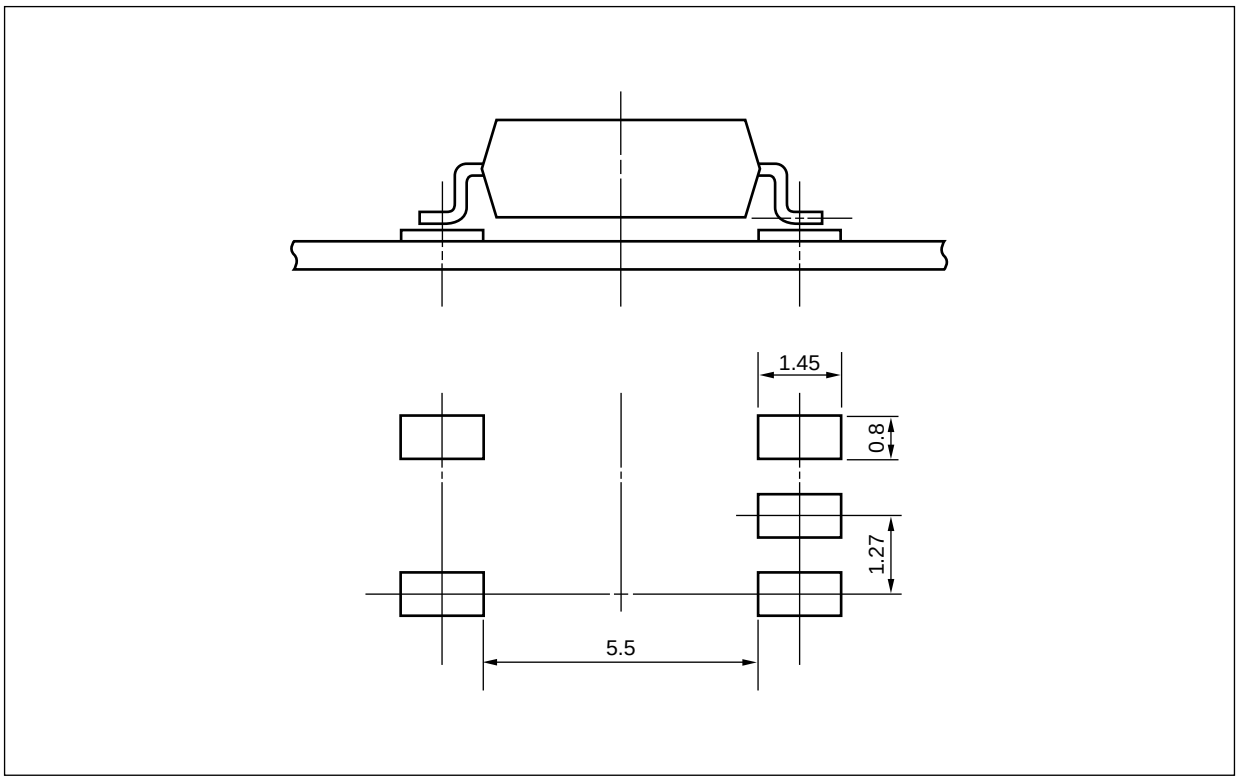

NOTES ON HANDLING

1. Recommended soldering conditions

(1) Infrared reflow soldering

• Peak reflow temperature	260°C or below (package surface temperature)
• Time of peak reflow temperature	10 seconds or less
• Time of temperature higher than 220°C	60 seconds or less
• Time to preheat temperature from 120 to 180°C	120±30 s
• Number of reflows	Three
• Flux	Rosin flux containing small amount of chlorine (The flux with a maximum chlorine content of 0.2 Wt% is recommended.)

Recommended Temperature Profile of Infrared Reflow

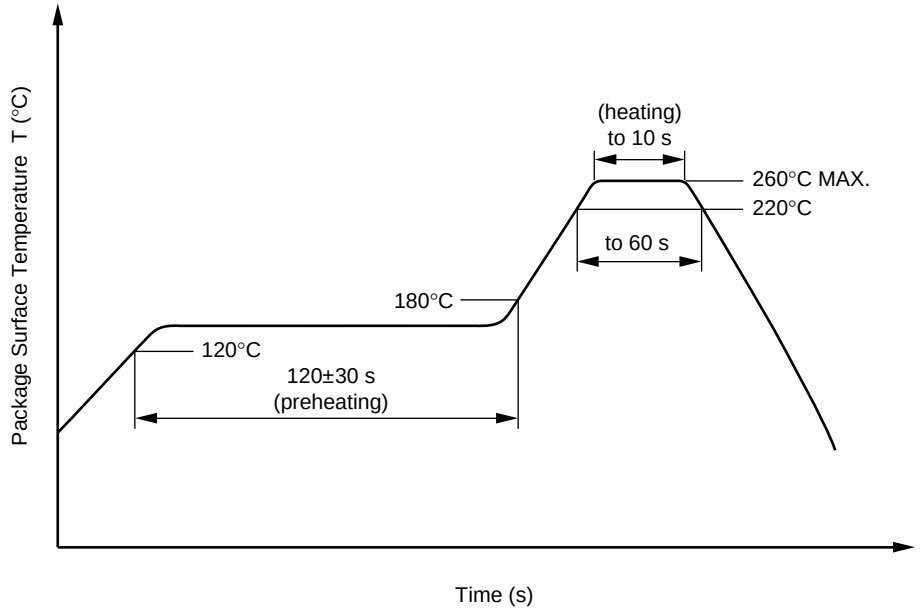

(2) Wave soldering

• Temperature	260°C or below (molten solder temperature)
• Time	10 seconds or less
• Preheating conditions	120°C or below (package surface temperature)
• Number of times	One (Allowed to be dipped in solder including plastic mold portion.)
• Flux	Rosin flux containing small amount of chlorine (The flux with a maximum chlorine content of 0.2 Wt% is recommended.)

(3) Soldering by Soldering Iron

• Peak Temperature (lead part temperature)	350°C or below
• Time (each pins)	3 seconds or less
• Flux	Rosin flux containing small amount of chlorine (The flux with a maximum chlorine content of 0.2 Wt% is recommended.)

(a) Soldering of leads should be made at the point 1.5 to 2.0 mm from the root of the lead

(b) Please be sure that the temperature of the package would not be heated over 100°C

(4) Cautions

• Fluxes

Avoid removing the residual flux with freon-based and chlorine-based cleaning solvent.

2. Cautions regarding noise

Be aware that when voltage is applied suddenly between the photocoupler's input and output or between collector-emitters at startup, the output transistor may enter the on state, even if the voltage is within the absolute maximum ratings.

★ SPECIFICATION OF VDE MARKS LICENSE DOCUMENT

Parameter	Symbol	Speck	Unit
Climatic test class (IEC 60068-1/DIN EN 60068-1)		40/100/21	
Dielectric strength maximum operating isolation voltage Test voltage (partial discharge test, procedure a for type test and random test) $U_{pr} = 1.5 \times U_{IORM}$, $P_d < 5$ pC	 U_{IORM} U_{pr}	 707 1 061	 V_{peak} V_{peak}
Test voltage (partial discharge test, procedure b for all devices) $U_{pr} = 1.875 \times U_{IORM}$, $P_d < 5$ pC	U_{pr}	1 326	V_{peak}
Highest permissible overvoltage	U_{TR}	6 000	V_{peak}
Degree of pollution (DIN EN 60664-1 VDE0110 Part 1)		2	
Comparative tracking index (IEC 60112/DIN EN 60112 (VDE 0303 Part 11))	CTI	175	
Material group (DIN EN 60664-1 VDE0110 Part 1)		III a	
Storage temperature range	T_{stg}	–55 to +125	°C
Operating temperature range	T_A	–40 to +100	°C
Isolation resistance, minimum value V_{IO} = 500 V dc at T_A = 25°C V_{IO} = 500 V dc at T_A MAX. at least 100°C	 Ris MIN. Ris MIN.	 10^{12} 10^{11}	 Ω Ω
Safety maximum ratings (maximum permissible in case of fault, see thermal derating curve) Package temperature Current (input current I_F, Psi = 0) Power (output or total power dissipation) Isolation resistance V_{IO} = 500 V dc at T_A = Tsi	 Tsi Isi Psi Ris MIN.	 150 200 300 10^9	 °C mA mW Ω

- **The information in this document is current as of March, 2010. The information is subject to change without notice. For actual design-in, refer to the latest publications of NEC Electronics data sheets, etc., for the most up-to-date specifications of NEC Electronics products. Not all products and/or types are available in every country. Please check with an NEC Electronics sales representative for availability and additional information.**
- No part of this document may be copied or reproduced in any form or by any means without the prior written consent of NEC Electronics. NEC Electronics assumes no responsibility for any errors that may appear in this document.
- NEC Electronics does not assume any liability for infringement of patents, copyrights or other intellectual property rights of third parties by or arising from the use of NEC Electronics products listed in this document or any other liability arising from the use of such products. No license, express, implied or otherwise, is granted under any patents, copyrights or other intellectual property rights of NEC Electronics or others.
- Descriptions of circuits, software and other related information in this document are provided for illustrative purposes in semiconductor product operation and application examples. The incorporation of these circuits, software and information in the design of a customer's equipment shall be done under the full responsibility of the customer. NEC Electronics assumes no responsibility for any losses incurred by customers or third parties arising from the use of these circuits, software and information.
- While NEC Electronics endeavors to enhance the quality and safety of NEC Electronics products, customers agree and acknowledge that the possibility of defects thereof cannot be eliminated entirely. In addition, NEC Electronics products are not taken measures to prevent radioactive rays in the product design. When customers use NEC Electronics products with their products, customers shall, on their own responsibility, incorporate sufficient safety measures such as redundancy, fire-containment and anti-failure features to their products in order to avoid risks of the damages to property (including public or social property) or injury (including death) to persons, as the result of defects of NEC Electronics products.
- NEC Electronics products are classified into the following three quality grades: "Standard", "Special" and "Specific".
  The "Specific" quality grade applies only to NEC Electronics products developed based on a customer-designated "quality assurance program" for a specific application. The recommended applications of an NEC Electronics product depend on its quality grade, as indicated below. Customers must check the quality grade of each NEC Electronics product before using it in a particular application.
  "Standard": Computers, office equipment, communications equipment, test and measurement equipment, audio and visual equipment, home electronic appliances, machine tools, personal electronic equipment and industrial robots.
  "Special": Transportation equipment (automobiles, trains, ships, etc.), traffic control systems, anti-disaster systems, anti-crime systems, safety equipment and medical equipment (not specifically designed for life support).
  "Specific": Aircraft, aerospace equipment, submersible repeaters, nuclear reactor control systems, life support systems and medical equipment for life support, etc.

The quality grade of NEC Electronics products is "Standard" unless otherwise expressly specified in NEC Electronics data sheets or data books, etc. If customers wish to use NEC Electronics products in applications not intended by NEC Electronics, they must contact an NEC Electronics sales representative in advance to determine NEC Electronics' willingness to support a given application.

(Note)
(1) "NEC Electronics" as used in this statement means NEC Electronics Corporation and also includes its majority-owned subsidiaries.
(2) "NEC Electronics products" means any product developed or manufactured by or for NEC Electronics (as defined above).

M8E0904E

Caution GaAs Products	This product uses gallium arsenide (GaAs). GaAs vapor and powder are hazardous to human health if inhaled or ingested, so please observe the following points. • Follow related laws and ordinances when disposing of the product. If there are no applicable laws and/or ordinances, dispose of the product as recommended below. 1. Commission a disposal company able to (with a license to) collect, transport and dispose of materials that contain arsenic and other such industrial waste materials. 2. Exclude the product from general industrial waste and household garbage, and ensure that the product is controlled (as industrial waste subject to special control) up until final disposal. • Do not burn, destroy, cut, crush, or chemically dissolve the product. • Do not lick the product or in any way allow it to enter the mouth.