CEL

PHOTOCOUPLER

PS8302L,PS8302L2

1 Mbps, HIGH CMR, ANALOG OUTPUT TYPE, 8 mm CREEPAGE 6-PIN SDIP PHOTOCOUPLER

–NEPOC Series–

DESCRIPTION

The PS8302L and PS8302L2 are optical coupled isolators containing a GaAlAs LED on the input side and a PIN photodiode and a high-speed amplifier transistor on the output side on one chip.

The PS8302L and PS8302L2 are designed specifically for high supply voltage and high common mode transient immunity (CMR).

The PS8302L and PS8302L2 are in 6-pin plastic SDIP (Shrink Dual In-line Package). The PS8302L2 has 8 mm creepage distance and is half size of 8-pin DIP.

The PS8302L is lead bending type (Gull-wing) for surface mounting.

The PS8302L2 is lead bending type for long creepage distance (Gull-wing) for surface mount.

FEATURES

- High common mode transient immunity (CM_H, CM_L = ±15 kV/μs MIN.)
- Half size of 8-pin DIP
- Long creepage distance (8 mm MIN. : PS8302L2)
- High supply voltage (V_{CC} = 35 V)
- High isolation voltage (BV = 5 000 Vr.m.s.)
- High-speed response (t_{PHL} = 0.8 μs MAX., t_{PLH} = 0.8 μs MAX.)
- Pb-Free product
- Safety standards
  - UL approved: No. E72422
<R>
  - CSA approved: No. CA 101391 (CA5A, CAN/CSA-C22.2 60065, 60950)
  - DIN EN60747-5-2 (VDE0884 Part2) approved: No. 40024069 (Option)

PIN CONNECTION
(Top View)

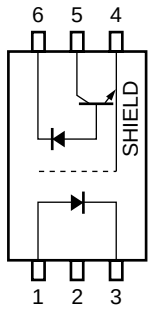

1. Anode
2. NC
3. Cathode
4. GND
5. V_O
6. V_{CC}

APPLICATIONS

- Computer and peripheral manufactures
- General purpose inverter
- Substitutions for relays and pulse transformers
- Power supply

The information in this document is subject to change without notice. Before using this document, please confirm that this is the latest version.

Document No. PN10688EJ05V0DS (5th edition)
Date Published June 2009 NS

The mark <R> shows major revised points.

The revised points can be easily searched by copying an "<R>" in the PDF file and specifying it in the "Find what:" field.

PACKAGE DIMENSIONS (UNIT: mm)

Lead Bending Type (Gull-wing) For Surface Mount

PS8302L

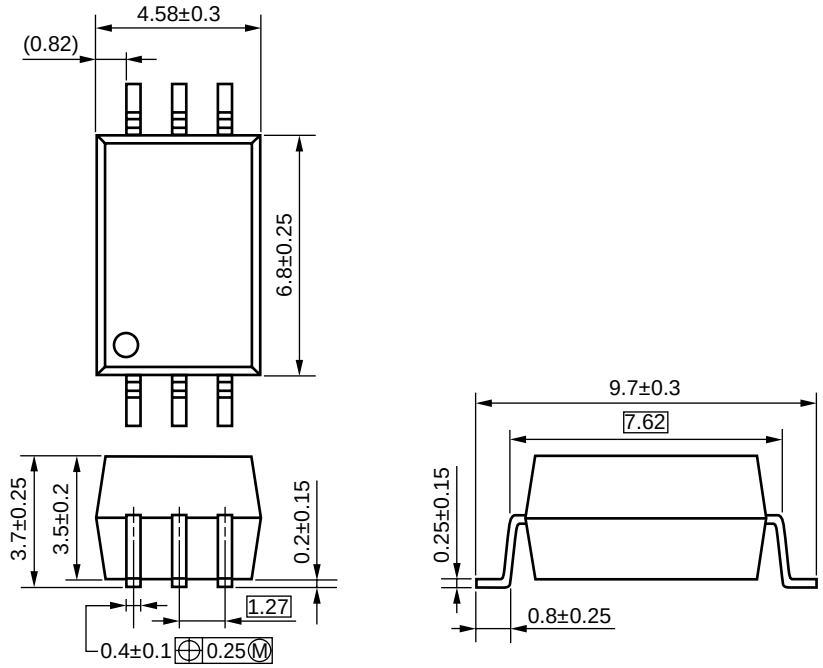

Lead Bending Type For Long Creepage Distance (Gull-wing) For Surface Mount

PS8302L2

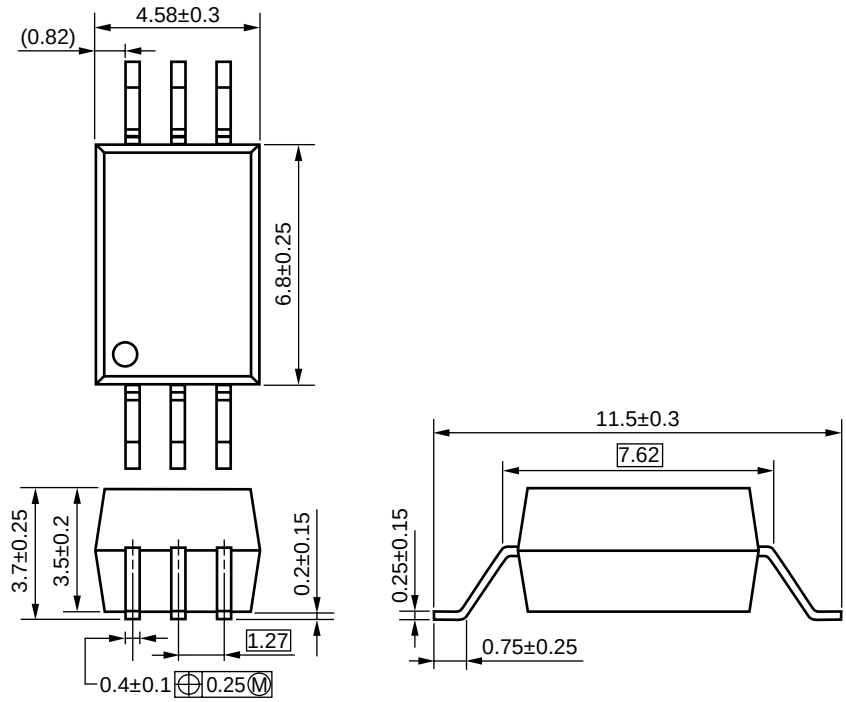

<R> **MARKING EXAMPLE**

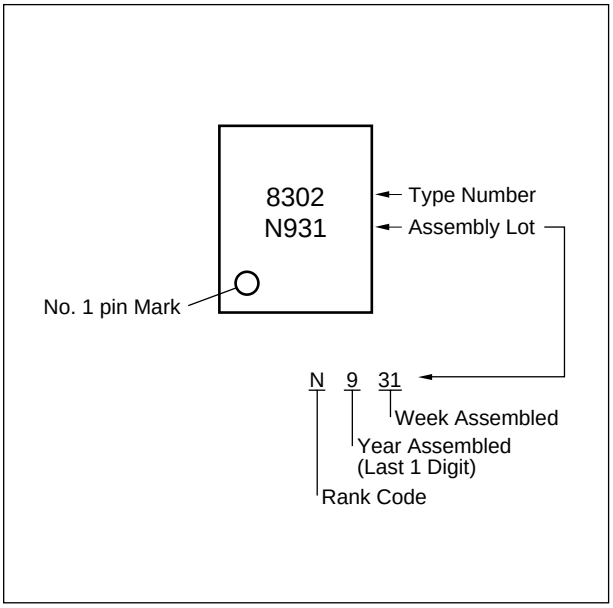

PHOTOCOUPLER CONSTRUCTION

Parameter	PS8302L	PS8302L2
Air Distance (MIN.)	7 mm	8 mm
Outer Creepage Distance (MIN.)	7 mm	8 mm
Isolation Distance (MIN.)	0.4 mm	0.4 mm

ORDERING INFORMATION

Part Number	Order Number	Solder Plating Specification	Packing Style	Safety Standard Approval	Application Part Number*1
PS8302L	PS8302L-AX	Pb-Free	20 pcs (Tape 20 pcs cut)	Standard products	PS8302L
PS8302L-E3	PS8302L-E3-AX	(Ni/Pd/Au)	Embossed Tape 2 000 pcs/reel	(UL, CSA approved)	
PS8302L2	PS8302L2-AX		20 pcs (Tape 20 pcs cut)		PS8302L2
PS8302L2-E3	PS8302L2-E3-AX		Embossed Tape 2 000 pcs/reel		
PS8302L-V	PS8302L-V-AX		20 pcs (Tape 20 pcs cut)	DIN EN60747-5-2	PS8302L
PS8302L-V-E3	PS8302L-V-E3-AX		Embossed Tape 2 000 pcs/reel	(VDE0884 Part2)	
PS8302L2-V	PS8302L2-V-AX		20 pcs (Tape 20 pcs cut)	Approved (Option)	PS8302L2
PS8302L2-V-E3	PS8302L2-V-E3-AX		Embossed Tape 2 000 pcs/reel		

***1** For the application of the Safety Standard, following part number should be used.

ABSOLUTE MAXIMUM RATINGS (T_A = 25°C, unless otherwise specified)

Parameter		Symbol	Ratings	Unit
Diode	Forward Current*1	I_F	25	mA
	Reverse Voltage	V_R	5	V
Detector	Supply Voltage	V_{CC}	35	V
	Output Voltage	V_O	35	V
	Output Current	I_O	8	mA
	Power Dissipation*2	P_C	100	mW
Isolation Voltage*3		BV	5 000	Vr.m.s.
Operating Ambient Temperature		T_A	–55 to +110	°C
Storage Temperature		T_{stg}	–55 to +125	°C

***1** Reduced to 0.3 mA/°C at T_A = 70°C or more.

***2** Reduced to 2.0 mW/°C at T_A = 75°C or more.

***3** AC voltage for 1 minute at T_A = 25°C, RH = 60% between input and output.
Pins 1-3 shorted together, 4-6 shorted together.

<R> **ELECTRICAL CHARACTERISTICS (T_A = 25°C, unless otherwise specified)**

Parameter		Symbol	Conditions	MIN.	TYP.[*1]	MAX.	Unit
Diode	Forward Voltage	V_F	I_F = 16 mA		1.6	2.0	V
	Reverse Current	I_R	V_R = 3 V			10	μA
	Forward Voltage Temperature Coefficient	$\Delta V_F/\Delta T_A$	I_F = 16 mA		−2.1		mV/°C
	Terminal Capacitance	C_t	V = 0 V, f = 1 MHz		30		pF
Detector	High Level Output Current	I_{OH} (1)	I_F = 0 mA, V_{CC} = V_O = 5.5 V		3	500	nA
	High Level Output Current	I_{OH} (2)	I_F = 0 mA, V_{CC} = V_O = 35 V			100	μA
	Low Level Output Voltage	V_{OL}	I_F = 16 mA, V_{CC} = 4.5 V, I_O = 2.4 mA		0.15	0.4	V
	High Level Supply Current	I_{CCH}	I_F = 0 mA, V_O = open, V_{CC} = 35 V		0.01	1	μA
	Low Level Supply Current	I_{CCL}	I_F = 16 mA, V_O = open, V_{CC} = 35 V		150		
Coupled	Current Transfer Ratio	CTR	I_F = 16 mA, V_{CC} = 4.5 V, V_O = 0.4 V	15			%
	Input-Output Isolation Resistance	R_{I-O}	V_{I-O} = 1 kV_{DC}	10^{11}			Ω
	Input-Output Isolation Capacitance	C_{I-O}	V = 0 V, f = 1 MHz		0.7		pF
	Propagation Delay Time (H → L)[*2]	t_{PHL}	I_F = 16 mA, V_{CC} = 5 V, R_L = 1.9 kΩ		0.3	0.8	μs
	Propagation Delay Time (L → H)[*2]	t_{PLH}			0.33	0.8	
	Common Mode Transient Immunity at High Level Output[*3]	CM_H	I_F = 0 mA, V_{CC} = 5 V, R_L = 4.1 kΩ, V_{CM} = 1.5 kV	15			kV/μs
	Common Mode Transient Immunity at Low Level Output[*3]	CM_L	I_F = 16 mA, V_{CC} = 5 V, R_L = 4.1 kΩ, V_{CM} = 1.5 kV	−15			

***1** Typical values at T_A = 25°C

***2** Test circuit for propagation delay time

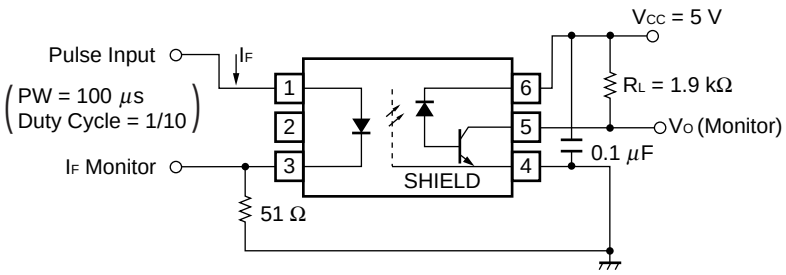

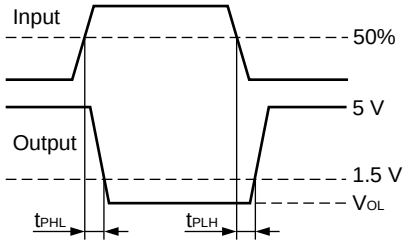

***3** Test circuit for common mode transient immunity

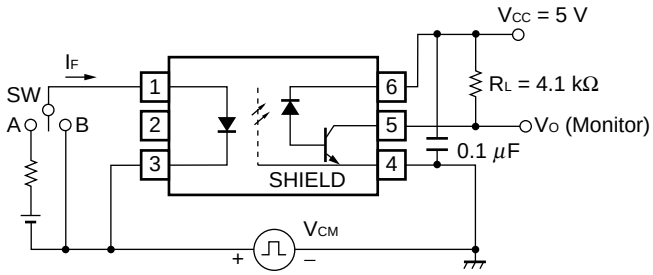

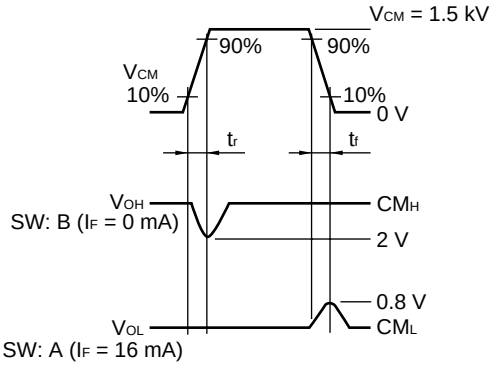

USAGE CAUTIONS

1. This product is weak for static electricity by designed with high-speed integrated circuit so protect against static electricity when handling.
2. By-pass capacitor of 0.1 μF is used between V_{CC} and GND near device. Also, ensure that the distance between the leads of the photocoupler and capacitor is no more than 10 mm.

<R> 3. Pin 2 (which is an NC[*1] pin) can either be connected directly to the GND pin on the LED side or left open. Unconnected pins should not be used as a bypass for signals or for any other similar purpose because this may degrade the internal noise environment of the device.

***1** NC: Not connected (No connection)

4. Avoid storage at a high temperature and high humidity.

<R> **TYPICAL CHARACTERISTICS (T_A = 25°C, unless otherwise specified)**

MAXIMUM FORWARD CURRENT vs. AMBIENT TEMPERATURE

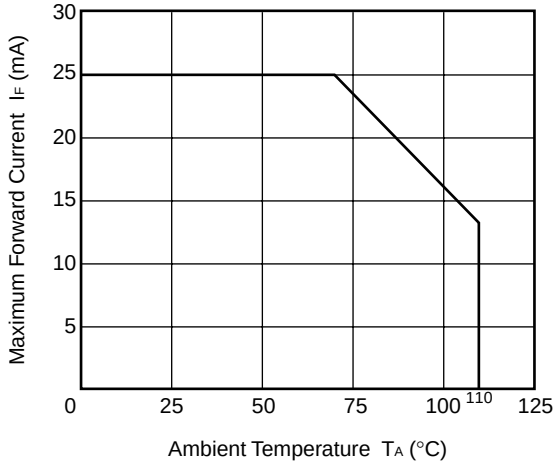

DETECTOR POWER DISSIPATION vs. AMBIENT TEMPERATURE

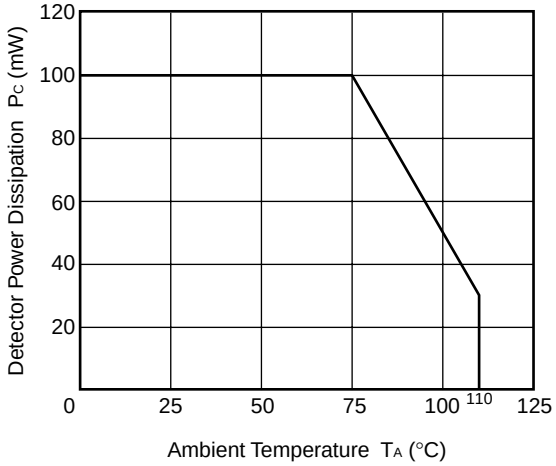

FORWARD CURRENT vs. FORWARD VOLTAGE

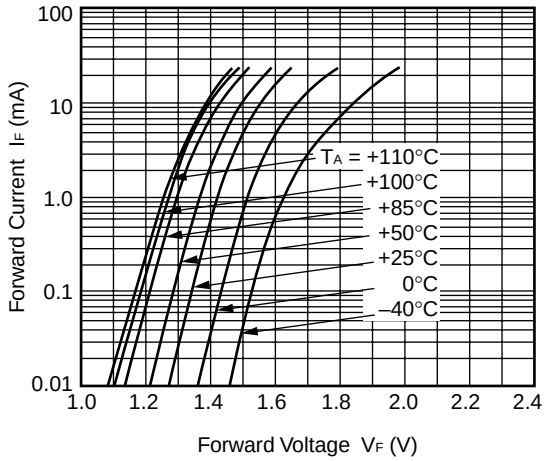

OUTPUT CURRENT vs. OUTPUT VOLTAGE

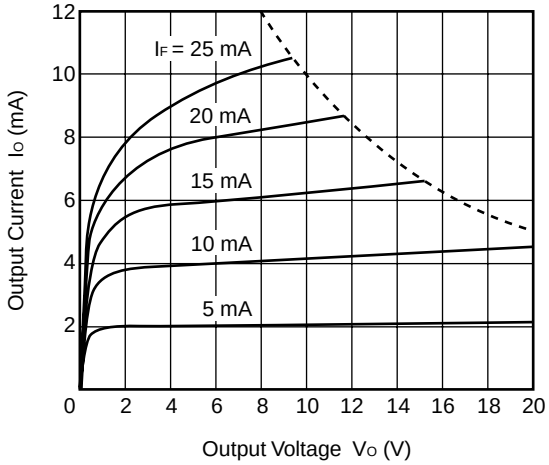

CURRENT TRANSFER RATIO vs. FORWARD CURRENT

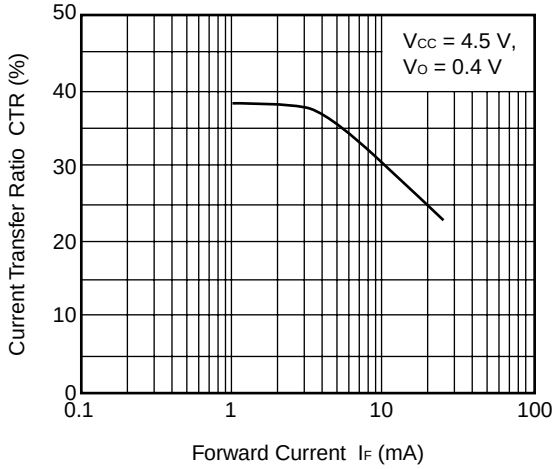

NORMALIZED CURRENT TRANSFER RATIO vs. AMBIENT TEMPERATURE

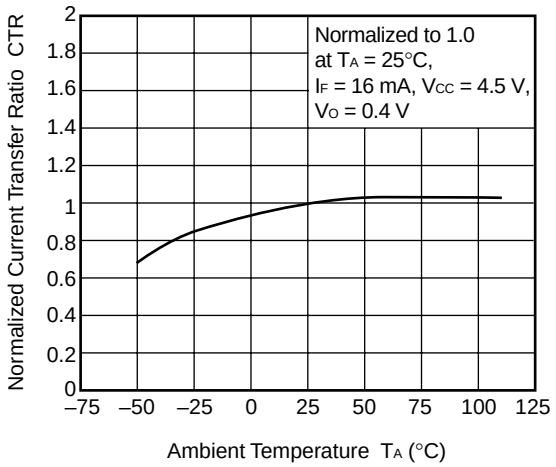

Remark The graphs indicate nominal characteristics.

OUTPUT VOLTAGE vs.
FORWARD CURRENT

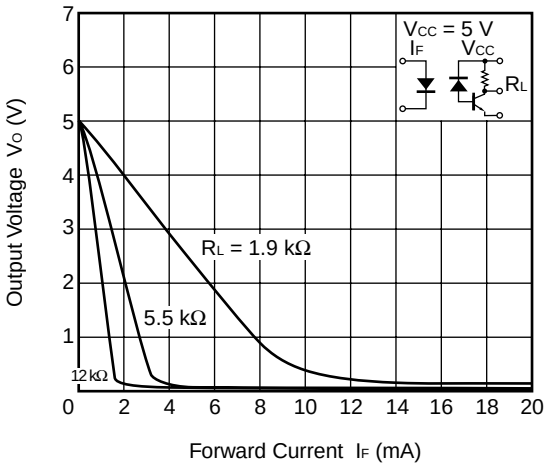

HIGH LEVEL OUTPUT CURRENT
vs. AMBIENT TEMPERATURE

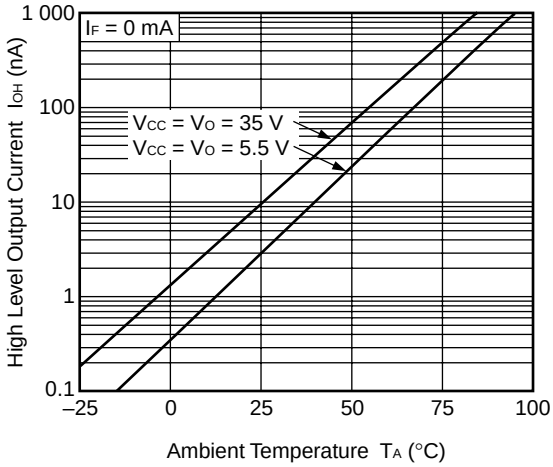

PROPAGATION DELAY TIME,
vs. LORD RESISTANCE

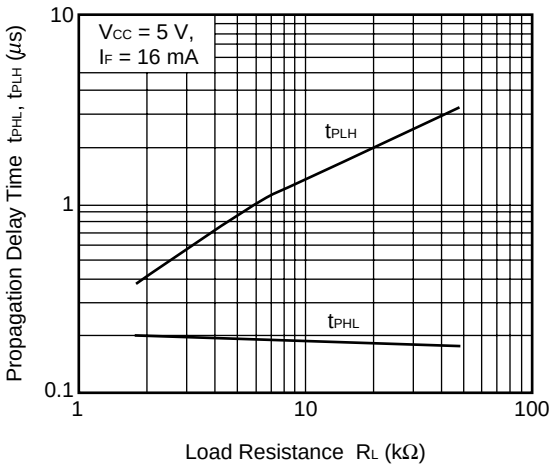

PROPAGATION DELAY TIME,
vs. AMBIENT TEMPERATURE

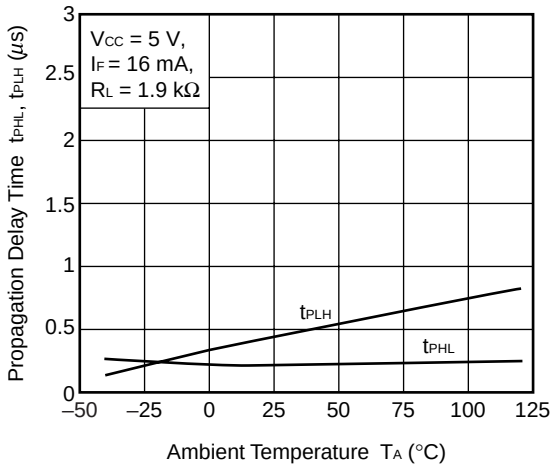

Remark The graphs indicate nominal characteristics.

<R> **TAPING SPECIFICATIONS (UNIT: mm)**

Outline and Dimensions (Tape)

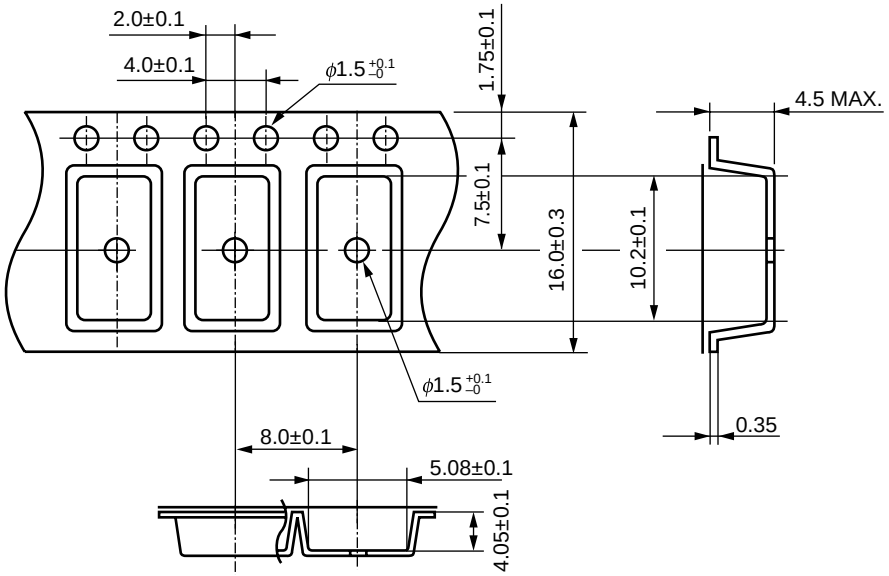

Tape Direction

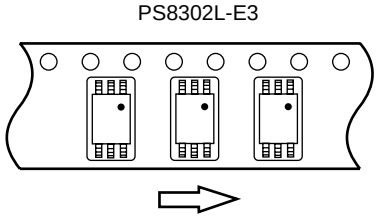

Outline and Dimensions (Reel)

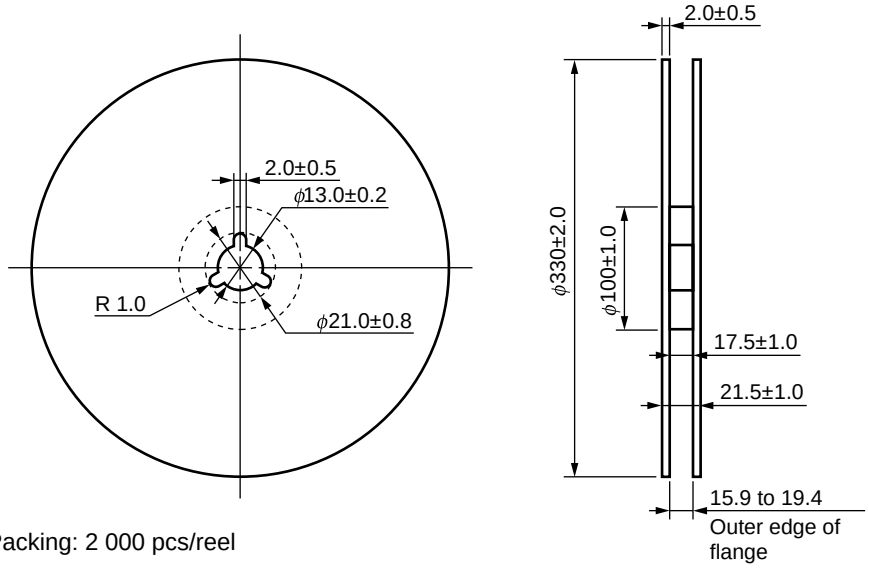

Packing: 2 000 pcs/reel

Outline and Dimensions (Tape)

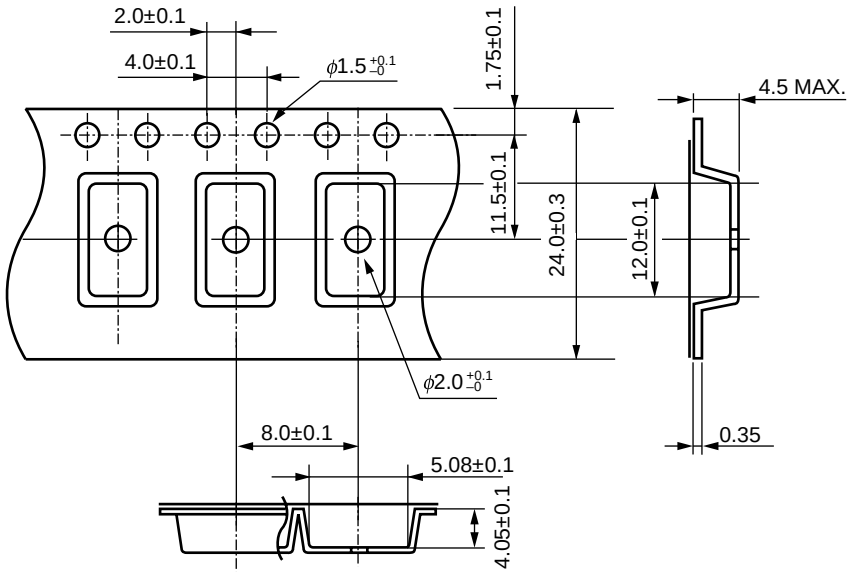

Tape Direction

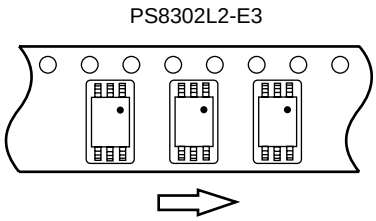

Outline and Dimensions (Reel)

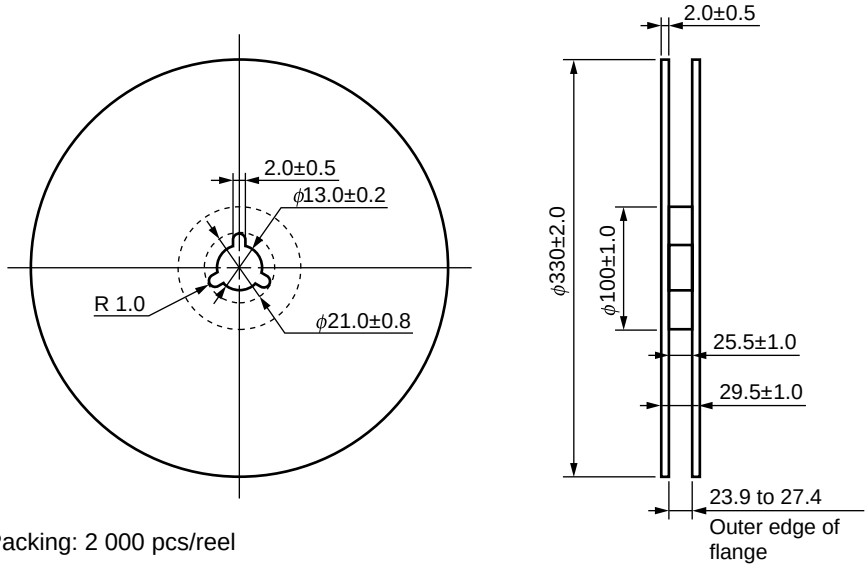

Packing: 2 000 pcs/reel

<R> **RECOMMENDED MOUNT PAD DIMENSIONS (UNIT: mm)**

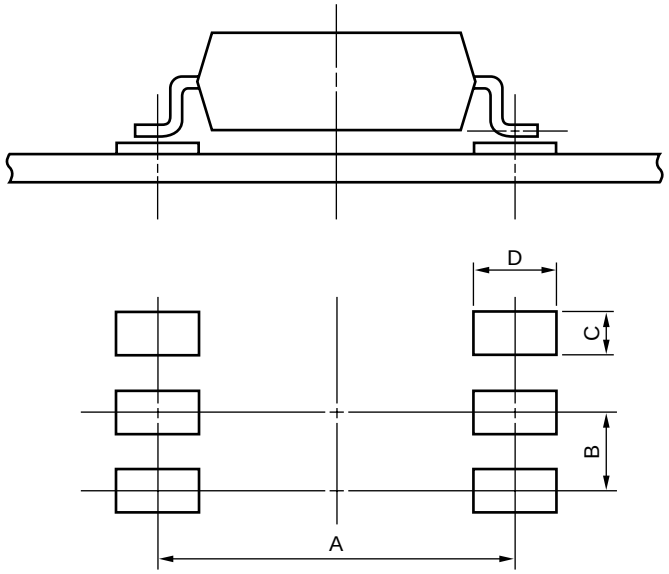

Part Number	Lead Bending	A	B	C	D
PS8302L	lead bending type (Gull-wing) for surface mount	8.2	1.27	0.8	2.2
PS8302L2	lead bending type (Gull-wing) for long creepage distance (surface mount)	10.2	1.27	0.8	2.2

<R> **NOTES ON HANDLING**

1. Recommended soldering conditions

(1) Infrared reflow soldering

• Peak reflow temperature	260°C or below (package surface temperature)
• Time of peak reflow temperature	10 seconds or less
• Time of temperature higher than 220°C	60 seconds or less
• Time to preheat temperature from 120 to 180°C	120±30 s
• Number of reflows	Three
• Flux	Rosin flux containing small amount of chlorine (The flux with a maximum chlorine content of 0.2 Wt% is recommended.)

Recommended Temperature Profile of Infrared Reflow

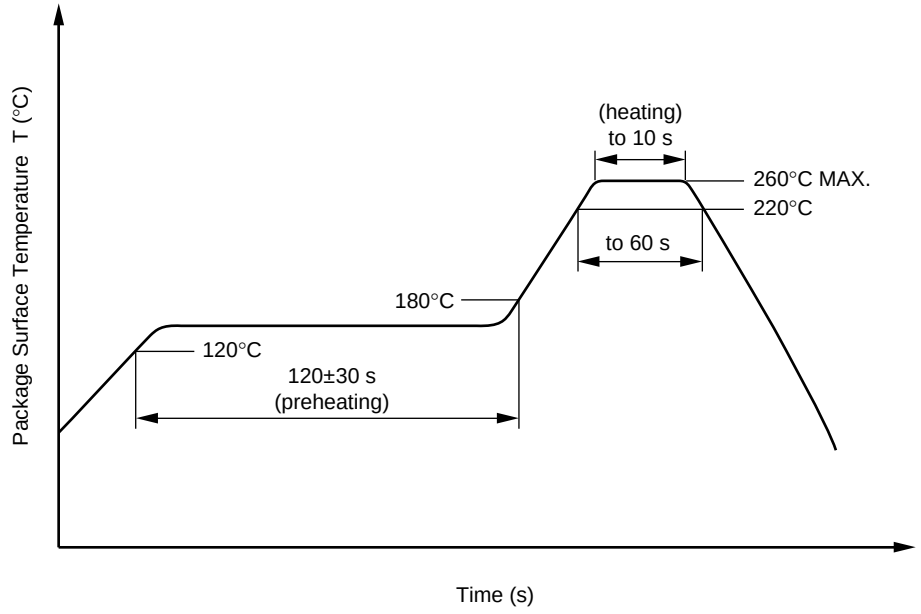

(2) Wave soldering

• Temperature	260°C or below (molten solder temperature)
• Time	10 seconds or less
• Preheating conditions	120°C or below (package surface temperature)
• Number of times	One (Allowed to be dipped in solder including plastic mold portion.)
• Flux	Rosin flux containing small amount of chlorine (The flux with a maximum chlorine content of 0.2 Wt% is recommended.)

(3) Soldering by soldering iron

• Peak temperature (lead part temperature)	350°C or below
• Time (each pins)	3 seconds or less
• Flux	Rosin flux containing small amount of chlorine (The flux with a maximum chlorine content of 0.2 Wt% is recommended.)

(a) Soldering of leads should be made at the point 1.5 to 2.0 mm from the root of the lead.

(b) Please be sure that the temperature of the package would not be heated over 100°C.

(4) Cautions

• Fluxes

Avoid removing the residual flux with freon-based and chlorine-based cleaning solvent.

2. Cautions regarding noise

Be aware that when voltage is applied suddenly between the photocoupler's input and output or between collector-emitters at startup, the output side may enter the on state, even if the voltage is within the absolute maximum ratings.

<R> SPECIFICATION OF VDE MARKS LICENSE DOCUMENT

Parameter	Symbol	Spec.	Unit
Climatic test class (IEC 60068-1/DIN EN 60068-1)		55/110/21	
Dielectric strength maximum operating isolation voltage Test voltage (partial discharge test, procedure a for type test and random test) $U_{pr} = 1.5 \times U_{IORM}$, $P_d < 5$ pC	 U_{IORM} U_{pr}	 1 130 1 695	 V_{peak} V_{peak}
Test voltage (partial discharge test, procedure b for all devices) $U_{pr} = 1.875 \times U_{IORM}$, $P_d < 5$ pC	U_{pr}	2 119	V_{peak}
Highest permissible overvoltage	U_{TR}	8 000	V_{peak}
Degree of pollution (DIN EN 60664-1 VDE0110 Part 1)		2	
Comparative tracking index (IEC 60112/DIN EN 60112 (VDE 0303 Part 11))	CTI	175	
Material group (DIN EN 60664-1 VDE0110 Part 1)		III a	
Storage temperature range	T_{stg}	–55 to +125	°C
Operating temperature range	T_A	–55 to +110	°C
Isolation resistance, minimum value V_{IO} = 500 V dc at T_A = 25°C V_{IO} = 500 V dc at T_A MAX. at least 100°C	 Ris MIN. Ris MIN.	 10^{12} 10^{11}	 Ω Ω
Safety maximum ratings (maximum permissible in case of fault, see thermal derating curve) Package temperature Current (input current I_F, Psi = 0) Power (output or total power dissipation) Isolation resistance V_{IO} = 500 V dc at T_A = Tsi	 Tsi Isi Psi Ris MIN.	 175 400 700 10^9	 °C mA mW Ω

Caution GaAs Products	This product uses gallium arsenide (GaAs). GaAs vapor and powder are hazardous to human health if inhaled or ingested, so please observe the following points. • Follow related laws and ordinances when disposing of the product. If there are no applicable laws and/or ordinances, dispose of the product as recommended below. 1. Commission a disposal company able to (with a license to) collect, transport and dispose of materials that contain arsenic and other such industrial waste materials. 2. Exclude the product from general industrial waste and household garbage, and ensure that the product is controlled (as industrial waste subject to special control) up until final disposal. • Do not burn, destroy, cut, crush, or chemically dissolve the product. • Do not lick the product or i any way allow it to enter the mouth.

NOTICE

1. Descriptions of circuits, software and other related information in this document are provided only to illustrate the operation of semiconductor products and application examples. You are fully responsible for the incorporation of these circuits, software, and information in the design of your equipment. California Eastern Laboratories and Renesas Electronics assumes no responsibility for any losses incurred by you or third parties arising from the use of these circuits, software, or information.
2. California Eastern Laboratories has used reasonable care in preparing the information included in this document, but California Eastern Laboratories does not warrant that such information is error free. California Eastern Laboratories and Renesas Electronics assumes no liability whatsoever for any damages incurred by you resulting from errors in or omissions from the information included herein.
3. California Eastern Laboratories and Renesas Electronics do not assume any liability for infringement of patents, copyrights, or other intellectual property rights of third parties by or arising from the use of Renesas Electronics products or technical information described in this document. No license, express, implied or otherwise, is granted hereby under any patents, copyrights or other intellectual property rights of California Eastern Laboratories or Renesas Electronics or others.
4. You should not alter, modify, copy, or otherwise misappropriate any Renesas Electronics product, whether in whole or in part. California Eastern Laboratories and Renesas Electronics assume no responsibility for any losses incurred by you or third parties arising from such alteration, modification, copy or otherwise misappropriation of Renesas Electronics product.
5. Renesas Electronics products are classified according to the following two quality grades: “Standard” and “High Quality”. The recommended applications for each Renesas Electronics product depends on the product’s quality grade, as indicated below. “Standard”: Computers; office equipment; communications equipment; test and measurement equipment; audio and visual equipment; home electronic appliances; machine tools; personal electronic equipment; and industrial robots etc. “High Quality”: Transportation equipment (automobiles, trains, ships, etc.); traffic control systems; anti-disaster systems; anti-crime systems; and safety equipment etc. Renesas Electronics products are neither intended nor authorized for use in products or systems that may pose a direct threat to human life or bodily injury (artificial life support devices or systems, surgical implantations etc.), or may cause serious property damages (nuclear reactor control systems, military equipment etc.). You must check the quality grade of each Renesas Electronics product before using it in a particular application. You may not use any Renesas Electronics product for any application for which it is not intended. California Eastern Laboratories and Renesas Electronics shall not be in any way liable for any damages or losses incurred by you or third parties arising from the use of any Renesas Electronics product for which the product is not intended by California Eastern Laboratories or Renesas Electronics.
6. You should use the Renesas Electronics products described in this document within the range specified by California Eastern Laboratories, especially with respect to the maximum rating, operating supply voltage range, movement power voltage range, heat radiation characteristics, installation and other product characteristics. California Eastern Laboratories shall have no liability for malfunctions or damages arising out of the use of Renesas Electronics products beyond such specified ranges.
7. Although Renesas Electronics endeavors to improve the quality and reliability of its products, semiconductor products have specific characteristics such as the occurrence of failure at a certain rate and malfunctions under certain use conditions. Further, Renesas Electronics products are not subject to radiation resistance design. Please be sure to implement safety measures to guard them against the possibility of physical injury, and injury or damage caused by fire in the event of the failure of a Renesas Electronics product, such as safety design for hardware and software including but not limited to redundancy, fire control and malfunction prevention, appropriate treatment for aging degradation or any other appropriate measures. Because the evaluation of microcomputer software alone is very difficult, please evaluate the safety of the final products or systems manufactured by you.
8. Please contact a California Eastern Laboratories sales office for details as to environmental matters such as the environmental compatibility of each Renesas Electronics product. Please use Renesas Electronics products in compliance with all applicable laws and regulations that regulate the inclusion or use of controlled substances, including without limitation, the EU RoHS Directive. California Eastern Laboratories and Renesas Electronics assume no liability for damages or losses occurring as a result of your noncompliance with applicable laws and regulations.
9. Renesas Electronics products and technology may not be used for or incorporated into any products or systems whose manufacture, use, or sale is prohibited under any applicable domestic or foreign laws or regulations. You should not use Renesas Electronics products or technology described in this document for any purpose relating to military applications or use by the military, including but not limited to the development of weapons of mass destruction. When exporting the Renesas Electronics products or technology described in this document, you should comply with the applicable export control laws and regulations and follow the procedures required by such laws and regulations.
10. It is the responsibility of the buyer or distributor of California Eastern Laboratories, who distributes, disposes of, or otherwise places the Renesas Electronics product with a third party, to notify such third party in advance of the contents and conditions set forth in this document, California Eastern Laboratories and Renesas Electronics assume no responsibility for any losses incurred by you or third parties as a result of unauthorized use of Renesas Electronics products.
11. This document may not be reproduced or duplicated in any form, in whole or in part, without prior written consent of California Eastern Laboratories.
12. Please contact a California Eastern Laboratories sales office if you have any questions regarding the information contained in this document or Renesas Electronics products, or if you have any other inquiries.

NOTE 1: “Renesas Electronics” as used in this document means Renesas Electronics Corporation and also includes its majority-owned subsidiaries.
NOTE 2: “Renesas Electronics product(s)” means any product developed or manufactured by or for Renesas Electronics.
NOTE 3: Products and product information are subject to change without notice.

CEL Headquarters • 4590 Patrick Henry Drive, Santa Clara, CA 95054 • Phone (408) 919-2500 • www.cel.com

For a complete list of sales offices, representatives and distributors,
Please visit our website: **www.cel.com/contactus**