PS301/PS302/PS303

Precision, Single-Supply SPST Analog Switches

Features

- Low On-Resistance (33Ω typ) Minimizes Distortion and Error Voltages
- Low Glitching Reduces Step Errors in Sample-and-Holds. Charge Injection, 2pC typ
- Single-Supply Operation (+2.5V to +16V)
- Improved Second Sources for MAX4501/MAX4502
- On-Resistance Matching Between Channels, <2Ω
- On-Resistance Flatness, <6Ω max
- Low Off-Channel Leakage, <5nA @ +85°C
- TTL/CMOS Logic Compatible
- Fast Switching Speed, t_{ON} < 150ns
- Guaranteed Break-Before-Make action (PS303 only) eliminates momentary crosstalk
- Rail-to-Rail Analog Signal Dynamic Range
- Low Power Consumption, <5µW
- MSOP Package minimizes board area

Applications

- Audio, Video Switching and Routing
- Portable Instruments
- Data Acquisition Systems
- Sample-and-Holds
- Telecommunication Systems
- Battery-Powered Systems

Description

The PS301/PS302/PS303 are improved high precision, medium voltage analog switches designed to operate with single power supplies. The PS301 is a single-pole single-throw (SPST), normally open (NO) switch. The PS302 has the same pinout as the PS301 but is a normally closed (NC) switch. The PS303 has one normally open (NO) and one normally closed (NC) switch per package. Each switch conducts current equally well in either direction when on. In the off state each switch blocks voltages up to the power-supply rail.

With a +5V power supply, the PS301/PS302/PS303 guarantee <60Ω ON-resistance. ON-resistance matching between channels is within 2Ω. ON-resistance flatness is less than 6Ω over the specified range. All three devices guarantee low leakage currents (<100pA @ 25°C, <10nA @ +85°C) and fast switching speeds (t_{ON} < 150ns). Break-before-make switching action protects against momentary crosstalk (PS303).

For single-supply operation below 5V, the PI5A317/318/319 are also recommended.

Functional Diagrams, Pin Configurations, and Truth Tables

Top Views

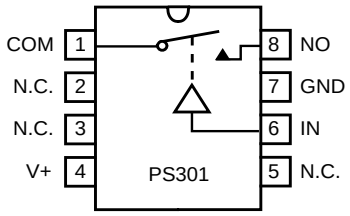

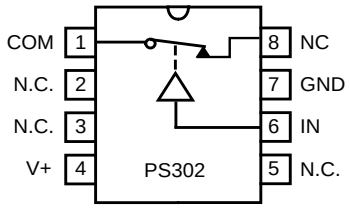

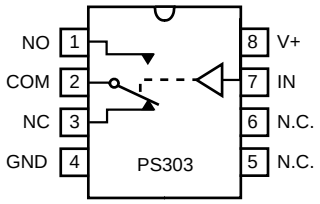

Switches shown for logic "0" input

PS301	
Logic	**Switch**
0	OFF
1	ON

PS302	
Logic	**Switch**
0	ON
1	OFF

PS303		
Logic	**NC**	**NO**
0	ON	OFF
1	OFF	ON

Absolute Maximum Ratings

Voltages Referenced to GND
V+ ..... -0.3V to +17V
V_{IN}, V_{COM}, V_{NC}, V_{NO} (Note 1) ..... -2V to (V+) +2V
or 30mA, whichever occurs first
Current (any terminal) 30mA
Peak Current, COM, NO, NC
(pulsed at 1ms, 10% duty cycle) 100mA
ESD per Method 3015.7 ..... >2000V

Thermal Information

Continuous Power Dissipation
Plastic DIP (derate 6mW/ °C above +70°C) 500mW
Narrow SO (derate 6mW/ °C above +70°C) 450mW
MSOP (derate 4mW/ °C above +70°C) 330mW
Storage Temperature ..... -65°C to +150°C
Lead Temperature (soldering, 10s) ..... +300°C

Note 1: Signals on NC, NO, COM, or IN exceeding V+ or GND are clamped by internal diodes. Limit forward diode current to 30mA maximum.

***Caution**: Stresses beyond those listed under "Absolute Maximum Ratings" may cause permanent damage to the device. This is a stress only rating and operation of the device at these or any other conditions beyond those indicated in the operational sections of this specification is not implied.*

Electrical Specifications - Single +5V Supply (V+ = 5V +10%, GND = 0V, V_{INH} = 2.4V, V_{INL} = 0.8V)

Parameter	Symbol	Conditions	Temp. (°C)	Min(2)	Typ(1)	Max(2)	Units
Analog Switch							
Analog Signal Range (3)	V_{ANALOG}		Full	0		V+	V
On Resistance	R_{ON}	V+ = 4.5V, V_{NO} or V_{NC} = +3.5V, I_{COM} = 1mA	25		33	60	Ω
			Full			75	
On-Resistance Match Between Channels(4)	ΔR_{ON}	V_{NO} or V_{NC} = +3V, I_{COM} = 1mA, V+ = 5V	25		0.8	2	
			Full			4	
On-Resistance Flatness(5)	$R_{FLAT(ON)}$	V+ = 5V, I_{COM} =1mA , V_{NO} or V_{NC} = 1V, 2V, 3V,	25		2	6	
			Full			8	
NO or NC Off Leakage Current(6)	$I_{NO(OFF)}$ or $I_{NC(OFF)}$	V+ = 5.5V, V_{COM} = 1V, V_{NO} or V_{NC} = 4.5V	25	–0.1	–0.01	0.1	nA
			Full	–5		5	
COM Off Leakage Current(6)	$I_{COM(OFF)}$	V+ = 5.5V, V_{COM} = 4.5V, V_{NO} or V_{NC} = 1V	25	–0.1	–0.01	0.1	
			Full	–5		5	
COM On Leakage Current(6)	$I_{COM(ON)}$	V+ = 5.5V , V_{COM} = 5V, V_{NO} or V_{NC} = 5V	25	–0.2	–0.04	0.2	
			Full	–10		10	
Logic Input							
Input Current with Input Voltage High	I_{INH}	V_{IN} = 2.4V, all others = 0.8V	Full	–0.5	0.005	0.5	µA
Input Current with Input Voltage Low	I_{INL}	V_{IN} = 0.8V, all others = 2.4V		–0.5	0.005	0.5	
Logic High Input Voltage	V_{INH}			2.4			V
Logic Low Input Voltage	V_{INL}					0.8	

Electrical Specifications - Single +5V Supply (continued)

(V + = 5V ±10%, GND = 0V, V_{INH} =2.4V, V_{INL} = 0.8V)

Parameter	Symbol	Conditions	Temp. (°C)	Min(1)	Typ(2)	Max(1)	Units
Dynamic							
Turn-On Time	t_{ON}	V_{NO} or V_{NC} = 3V, Figure 2	25		85	150	ns
			Full			240	
Turn-Off Time	t_{OFF}		25		25	100	
			Full			150	
Break-Before-Make TimeDelay(3)	t_D	PS303 only, R_L = 300Ω, C_L= 35pF, Fig. 3	25	2	5		
Charge Injection(3)	Q	C_L= 1nF, V_{GEN}= 0V, R_{GEN}= 0Ω, Fig. 4			1	5	pC
Off Isolation(7)	OIRR	R_L = 50Ω, C_L= 5pF, f= 1MHz, Fig. 5			–72		dB
Crosstalk	X_{TALK}	R_L = 50Ω, C_L= 5pF, f= 1MHz, Fig. 6			–85		
NC or NO Off Capacitance	$C_{(OFF)}$	f=1MHz, Figure 7			9		pF
COM Off Capacitance	$C_{COM(OFF)}$				9		
COM On Capacitance	$C_{COM(ON)}$	f=1MHz, Figure 8			22		
Supply							
Power-Supply Range	V+		Full	2.7		16	V
Positive Supply Current	I+	V+ = 5.5V, V_{IN} = 0V or V+, all channels on or off		–1		1	µA

Notes:

1. The algebraic convention, where the most negative value is a minimum and the most positive is a maximum, is used in this data sheet.
2. Typical values are for DESIGN AID ONLY, not guaranteed or subject to production testing.
3. Guaranteed by design
4. $\Delta R_{ON} = R_{ON}$ max. - R_{ON} min.
5. Flatness is defined as the difference between the maximum and minimum value of on-resistance measured.
6. Leakage parameters are 100% tested at maximum rated hot temperature and guaranteed by correlation at +25ºC.
7. Off Isolation = $20\log_{10} [V_{COM} / (V_{NC}$ or $V_{NO})]$. See Figure 5.

Electrical Specifications - Single +12V Supply

(V+ = 12V ±10%, GND = 0V, V_{INH} = 5V, V_{INL} = 0)

Parameter	Symbol	Conditions	Temp (°C)	Min(1)	Typ(2)	Max(1)	Units
Analog Switch							
Analog Signal Range(3)	V_{ANALOG}			0		V+	V
On-Resistance	R_{ON}	V+ =12V, I_{COM} = 1mA, V_{NO} or V_{NC} = 6V	25		14	35	Ω
			Full			45	
Dynamic							
Turn-On Time(3)	t_{ON}	V_{NO} or V_{NC} = 6V, Figure 2	25		85	150	ns
			Full			240	
Turn-Off Time(3)	t_{OFF}		25		25	100	
			Full			150	
Break-Before-Make Time Delay(3)	t_D	PS303 only	25	2	5		
Charge Injection(3)	Q	C_L = 1nF, V_{GEN} = 6V, R_{GEN} = 0Ω, Figure 4	25				pC
Supply							
Positive Supply Current	I+	V+ = 13.2V, V_{IN} = 0V or V+, all channels on or off	Full	–1	0.01	1	µA

Electrical Specifications - Single +3.3V Supply

(V+ = 3.3V ±10%, GND = 0V, V_{INH} = 2.4V, V_{INL} = 0.8V)

Parameter	Symbol	Conditions	Temp (°C)	Min(1)	Typ(2)	Max(1)	Units
Analog Switch							
Analog Signal Range(3)	V_{ANALOG}			0		V+	V
On-Resistance	R_{ON}	V+ = 3V, I_{COM} = 1mA, V_{NO} or V_{NC} = 1.5V	25		83	175	Ω
			Full			275	
Dynamic							
Turn-On Time(3)	t_{ON}	V_{NO} or V_{NC} = 1.5V, Figure 2	25		160	400	ns
			Full			500	
Turn-Off Time(3)	t_{OFF}		25		40	125	
			Full			175	
Break-Before-Make Time Delay(3)	t_D	PS303 only	25	2	5		
Charge Injection(3)	Q	C_L = 1nF, V_{GEN} = 0V, R_{GEN} = 0Ω, Figure 4	25		1	5	pC
Supply							
Positive Supply Current	I+	V+ = 3.6V, V_{IN} = 0V or V+, all channels on or off	Full	–1	0.01	1	µA

Test Circuits/Timing Diagrams

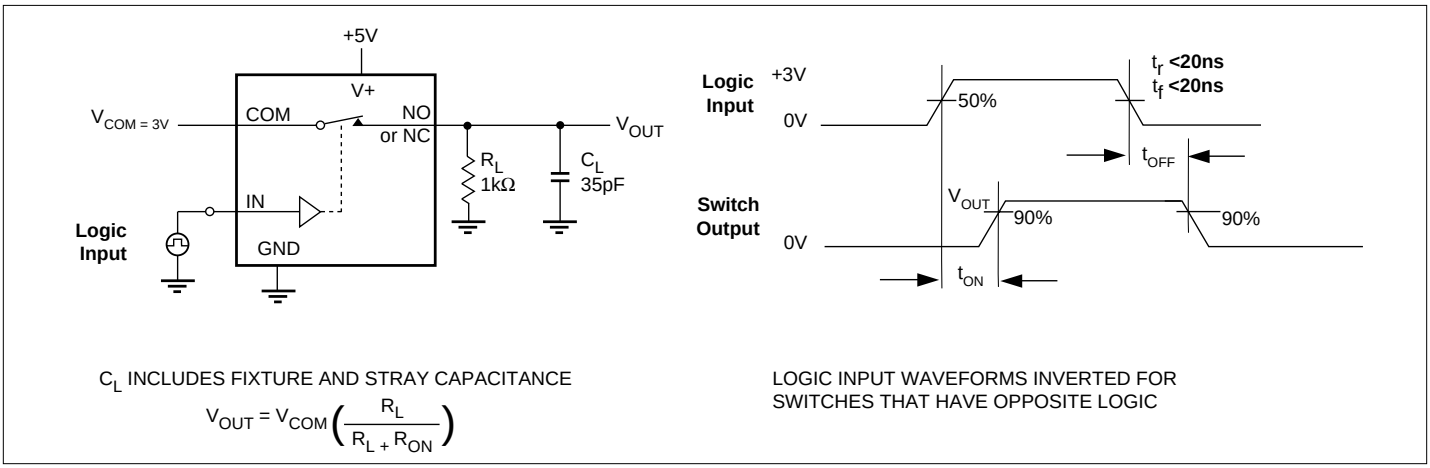

Figure 2. Switching Time

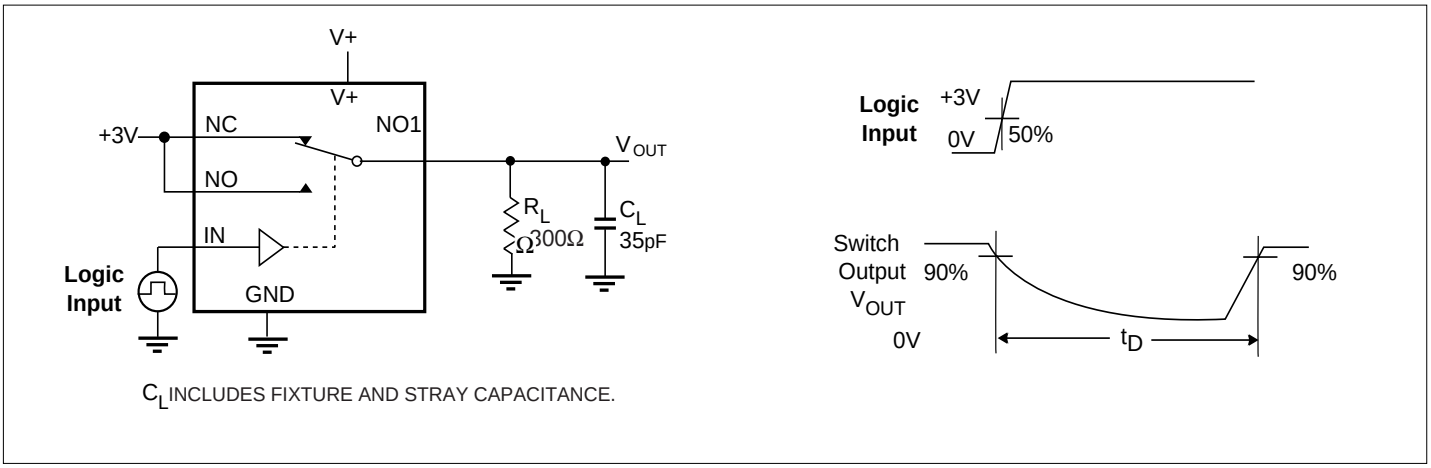

Figure 3. Break-Before-Make Interval (PS303 only)

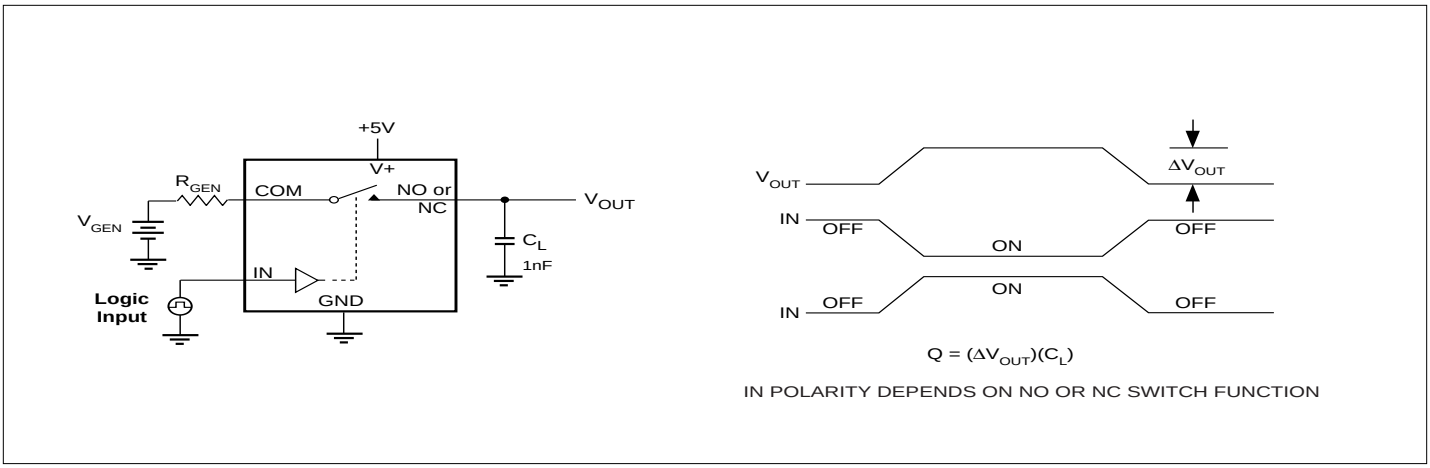

Figure 4. Charge Injection

Test Circuits/Timing Diagrams (continued)

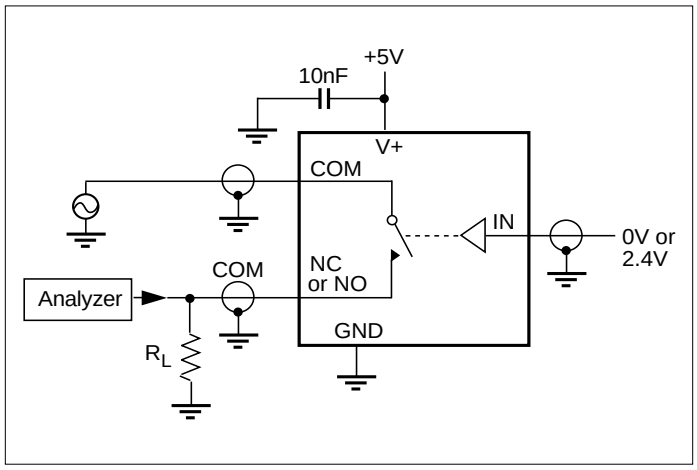

Figure 5. Off Isolation

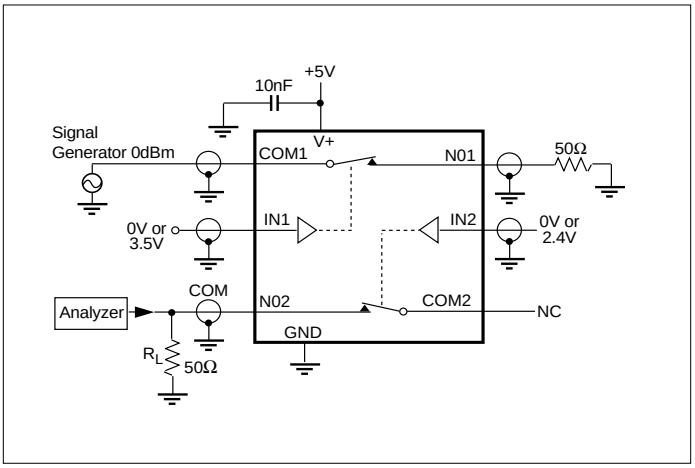

Figure 6. Crosstalk

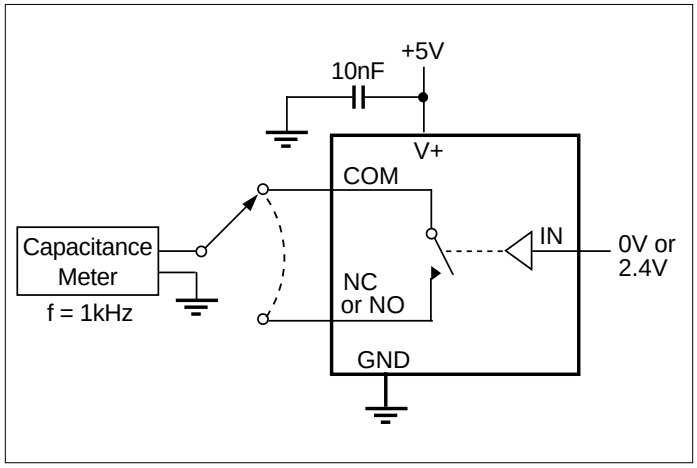

Figure 7. Channel-Off Capacitance

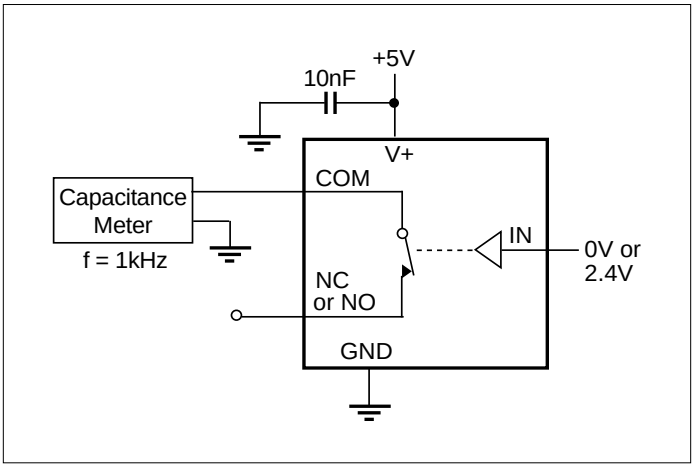

Figure 8. Channel-On Capacitance

Applications Information

Overvoltage Protection

Proper power-supply sequencing is recommended for all CMOS devices. Do not exceed the absolute maximum ratings, because stresses beyond the listed ratings may cause permanent damage to the devices. Always sequence V+ on first, and then logic inputs. If power-supply sequencing is not possible, add two small signal diodes or two current limiting resistors in series with the supply pins for overvoltage protection (Figure 1). Adding diodes reduces the analog signal range, but low switch resistance and low leakage characteristics are unaffected.

Logic Levels

When powered from +5V the PS301/PS302/PS303 can be operated with either TTL- or CMOS-Logic levels. If V+ is different than +5V, the logic threshold level will vary.

Power consumption is minimal when the logic control voltages reach V+ or GND.

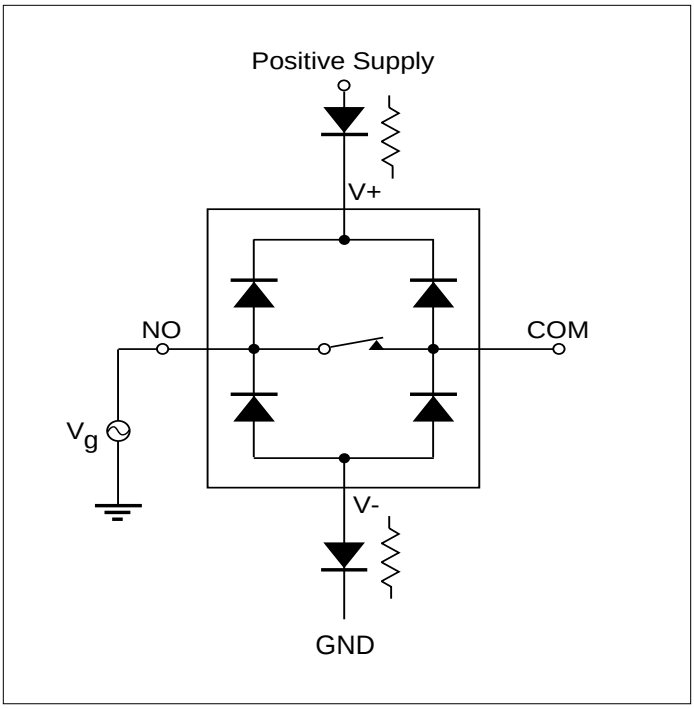

Figure 1. Overvoltage protection is accomplished by using two external blocking diodes or two current limiting resistors.

Ordering Information

Part	Temp. Range	Package
PS301CPA	0ºC to +70ºC	8 Plastic DIP
PS301CSA	0ºC to +70ºC	8 Narrow SO
PS301CUA	0ºC to +70ºC	8 MSOP
PS301EPA	–40ºC to +85ºC	8 Plastic DIP
PS301ESA	–40ºC to +85ºC	8 Narrow SO
PS302CPA	0ºC to +70ºC	8 Plastic DIP
PS302CSA	0ºC to +70ºC	8 Narrow SO
PS302CUA	0ºC to +70ºC	8 MSOP

Part	Temp. Range	Package
PS302EPA	–40ºC to +85ºC	8 Plastic DIP
PS302ESA	–40ºC to +85ºC	8 Narrow SO
PS303CPA	0ºC to +70ºC	8 Plastic DIP
PS303CSA	0ºC to +70ºC	8 Narrow SO
PS303CUA	0ºC to +70ºC	8 MSOP
PS303EPA	–40ºC to +85ºC	8 Plastic DIP
PS303ESA	–40ºC to +85ºC	8 Narrow SO