# DATA SHEET

## PS300R~PS3010R

### FAST SWITCHING PLASTIC RECTIFIER

**VOLTAGE** 50 to 1000 Volts **CURRENT** 3.0 Amperes

**DO-201AD** Unit: inch(mm)

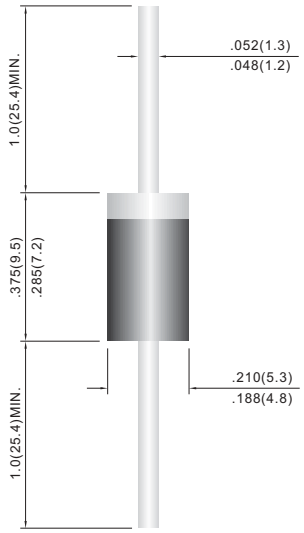


### FEATURES

- High current capability.
- Plastic package has Underwriters Laboratory Flammability Classification 94V-O utilizing Flame Retardant Epoxy Molding Compound.
- Low leakage.
- Exceeds environmental standards of MIL-S-19500/228
- Fast switching for high efficiency.
- Both normal and Pb free product are available :
  Normal : 80~95% Sn, 5~20% Pb
  Pb free: 98.5% Sn above

### MECHANICAL DATA

Case: Molded plastic, DO-201AD

Terminals: Axial leads, solderable to MIL-STD-202,Method 208

Polarity: Color Band denotes cathode end

Mounting Position: Any

Weight: 0.04 ounce, 1.1 gram

### MAXIMUM RATINGS AND ELECTRICAL CHARACTERISTICS

Ratings at 25°C ambient temperature unless otherwise specified. Resistive or inductive load, 60Hz.

| PARAMETER | SYMBOL | PS300R | PS301R | PS302R | PS304R | PS306R | PS308R | PS3010R | UNITS |
|---|---|---|---|---|---|---|---|---|---|
| Maximum Recurrent Peak Reverse Voltage | $V_{RRM}$ | 50 | 100 | 200 | 400 | 600 | 800 | 1000 | V |
| Maximum RMS Voltage | $V_{RMS}$ | 35 | 70 | 140 | 280 | 420 | 560 | 700 | V |
| Maximum DC Blocking Voltage | $V_{DC}$ | 50 | 100 | 200 | 400 | 600 | 800 | 1000 | V |
| Maximum Average Forward Current .375"(9.5mm) lead length at $T_A$=55°C | $I_{AV}$ | 3.0 | | | | | | | A |
| Peak Forward Surge Current : 8.3ms single half sine-wave superimposed on rated load(JEDEC method) | $I_{FSM}$ | 200 | | | | | | | A |
| Maximum Forward Voltage at 3.0A | $V_F$ | 1.3 | | | | | | | V |
| Maximum DC Reverse Current at $T_A$=25°C<br>Rated DC Blocking Voltage $T_A$=100°C | $I_R$ | 5.0<br>500 | | | | | | | uA |
| Maximum Reverse Recovery Time (Note 1) | $T_{RR}$ | 150 | | | | 250 | 500 | | ns |
| Typical Junction capacitance (Note 2) | $C_J$ | 60 | | | | | | | pF |
| Typical Thermal Resistance (Note 3) | RθJA | 22 | | | | | | | °C /W |
| Operating Junction and Storage Temperature Range | $T_J$,$T_{STG}$ | -55 TO +150 | | | | | | | °C |

NOTES:1. Reverse Recovery Test Conditions: $I_F$=.5A, $I_R$=1A, $I_{rr}$=.25A

2. Measured at 1 MHz and applied reverse voltage of 4.0 VDC

3. Thermal resistance from junction to ambient and from junction to lead length 0.375"(9.5mm) P.C.B. mounted

## RATING AND CHARACTERISTIC CURVES

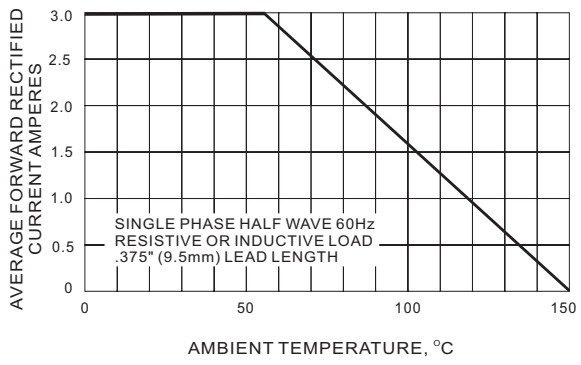


FIG.1 FORWARD CURRENT DERATING CURVE

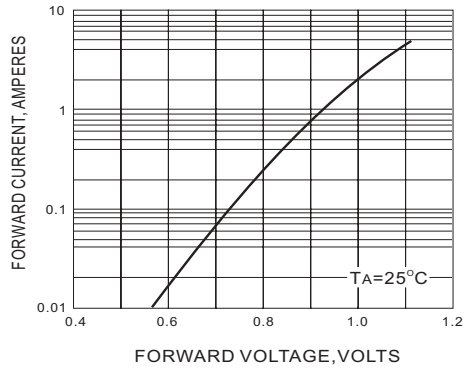


FIG.2 TYPICAL FORWARD CHARACTERISTIC

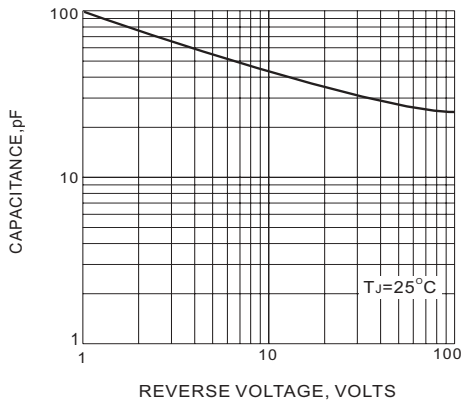


FIG.3 TYPICAL JUNCTION CAPACITANCE

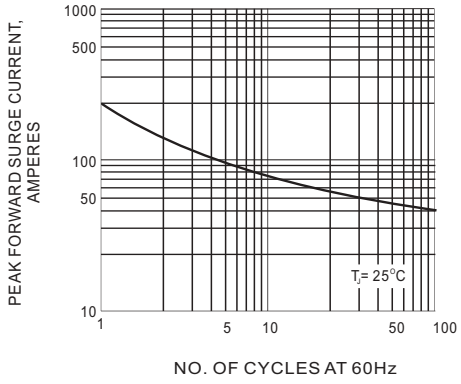


FIG.4 PEAK FORWARD SURGE CURRENT