Wall Industries, Inc.

PS2K0 Series
2000 Watt Single Output
PFC and Current Sharing
AC/DC Switching Power Supply

FEATURES

- **Remote Sense**
- **Power Good Signal**
- **Remote ON/OFF Control**
- **0.98 Typical Power Factor**
- **Programmable Output Voltage**
- **Forced Current Sharing at Parallel Operation**
- **Input Voltage: 90~260VAC (90 ~ 170VAC Reduced Power)**
- **Short Circuit/ Over Load/ Over Voltage/ Over Temperature Protection**



SPECIFICATIONS: *PS2K0 Series*	
All specifications are based on 25°C, Nominal Input Voltage, and Maximum Output Current unless otherwise noted. We reserve the right to change specifications based on technological advances.	
INPUT SPECIFICATIONS	
Input Voltage Range	90 ~ 260VAC **(90 ~ 170 VAC reduced power - see "Output Power vs Input Voltage" derating curve)**
Input Frequency	47 to 63Hz
Input Current	11.5A at 230VAC (Typical)
Inrush Current	180A at 230VAC (Typical)
Leakage Current	< 10.5mA at 240VAC
Remote ON/OFF Control	Compatible with a TTL signal to turn ON/OFF
OUTPUT SPECIFICATIONS	
Output Voltage	See Table
Output Power Range	2000 Watts max.
Output Voltage Adjustability	+3.0% ~ -12% typical adjustment by potentiometer. 20% ~ 100% adjustment by 1 ~ 5VDC external control.
Line Regulation	Less than 1%
Load Regulation	Less than 1%
Output Current	See Table
Ripple & Noise (peak to peak)	See Table
Setup, Rise, Hold-Up Time	500ms, 250ms, 12ms at full load
Temperature Coefficient	±0.04% / °C (0 ~ 50°C)
Remote Sense	Yes
PROTECTION	
Over Voltage Protection	110% ~ 135% follow to output setup point (shutdown output voltage, re-power on to recover)
Over Load Protection	105% ~ 115% rated output power (current limiting, delay shutdown output voltage, re-power on to recover)
Over Temperature Protection	> 100°C / measure by heatsink near transformer (shutdown output voltage, recovers automatically after temperature goes down.
GENERAL SPECIFICATIONS	
Efficiency	See Table
Withstand Voltage	3KVAC (input to output); 1.5KVAC (input to field ground); 500VAC (output to field ground)
Isolation Resistance	100M ohms / 500VDC (input to output, input to field ground, output to field ground)
Power Factor	0.95 at 230VAC (Typical)
Power Good Signal	Open Collector NPN Transistor
Special Function	DC voltage Adj., Remote Sensing, Remote Control, Parallel Operation
ENVIRONMENTAL SPECIFICATIONS	
Working Temperature	0°C to +50°C @ 100% Load, +65°C @ 50% Load.
Storage Temperature	-20°C to +85°C
Working Humidity (non-condensing)	20% to 90% RH
Storage Humidity	10% to 95% RH
Vibration	10 ~ 200Hz, 2g 10 min./1cycle, Period of 60 min. for each axis.
Cooling	Power rating and temperature controlled fan.
MTBF	74,900 hrs min. (MIL-HDBK-217F (25°C)
PHYSICAL SPECIFICATIONS	
Weight	8.9kg
Dimensions	320(L) x 212(W) x 124(H) mm
SAFETY & EMC	
Safety Standards	UL1950, TUV EN60950-1 Approved
EMI Conduction & Radiation	Compliance to EN55022 (CISPR22) class A
Harmonic Current	Compliance to EN61000-3-2,3
EMS Immunity	Compliance to EN55024

Wall Industries, Inc. 5 Watson Brook Road Exeter, NH 03833
603-778-2300 www.wallindustries.com Fax 603-778-9797

OUTPUT VOLTAGE / CURRENT RATING CHART

Model Number	Output Voltage	Output Current	Maximum Output Power	Ripple & Noise	Efficiency
PS2K0-09	9 VDC	222A	1998W	150mVp-p	83%
PS2K0-12	12 VDC	166A	1992W	150mVp-p	84%
PS2K0-15	15 VDC	133A	1995W	150mVp-p	85%
PS2K0-18	18 VDC	111.1A	2000W	180mVp-p	86%
PS2K0-24	24 VDC	83A	1992W	240mVp-p	88%
PS2K0-36	36 VDC	55.5A	1998W	360mVp-p	88%
PS2K0-48	48 VDC	41A	1968W	480mVp-p	89%
PS2K0-60	60 VDC	33A	1980W	600mVp-p	90%

NOTES

1. Input voltage is 90 ~ 260VAC however, the unit does not reach full power until >170VAC. See derating curve below.
2. Dimensions of the mechanical drawing are shown in millimeters and inches.
3. Weight of the unit is 8900 grams.

DERATING CURVES

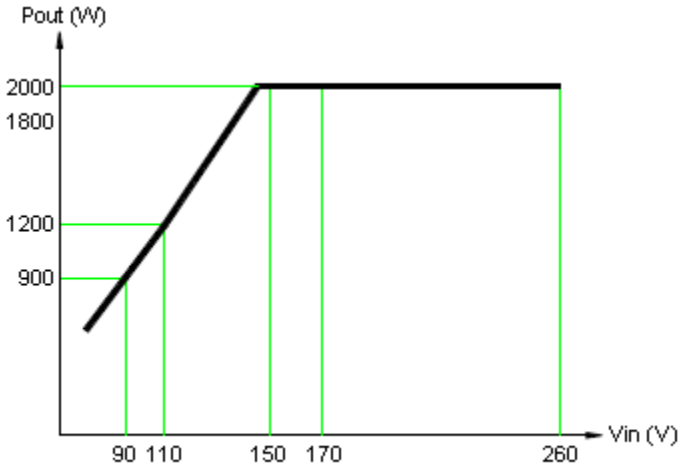

Output Power vs Input Voltage Derating Curve



Output Power vs Ambient Temperature Derating Curve

CONNECTOR PIN-OUT DRAWINGS

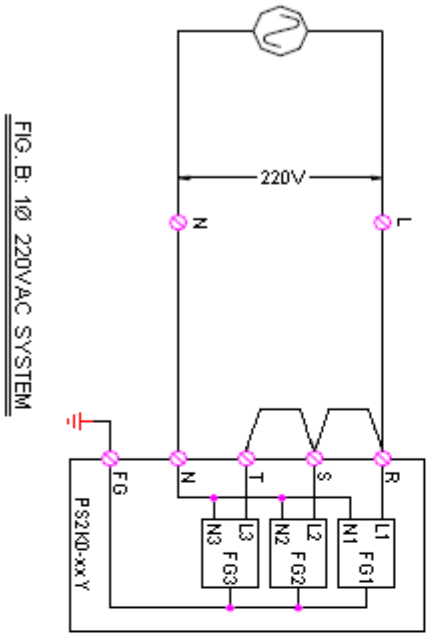

FIG. B: 1Ø 220VAC SYSTEM

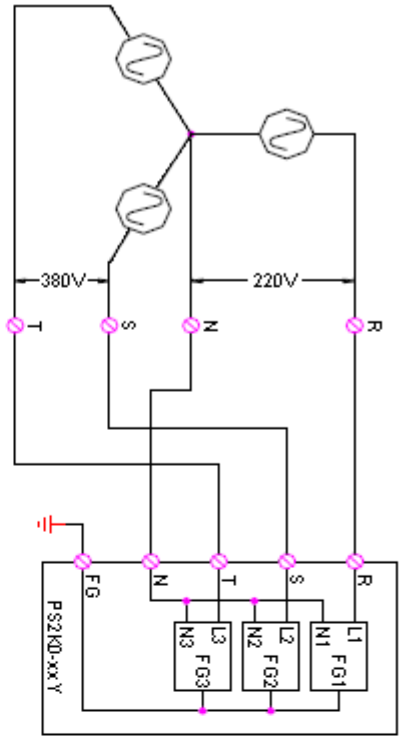

FIG. A: 3Ø4W 220/380VAC SYSTEM

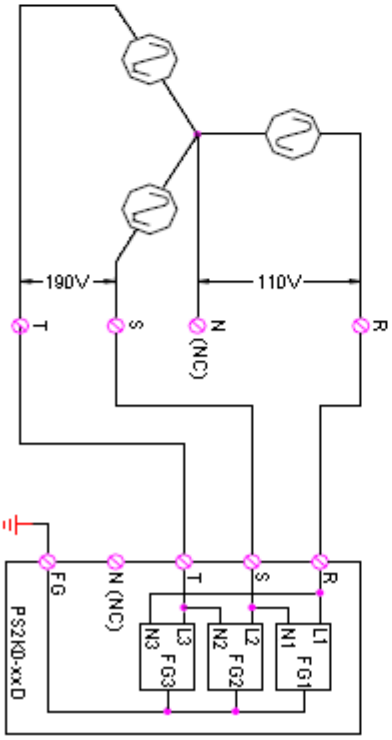

FIG D: 3Ø4W 110/190VAC SYSTEM

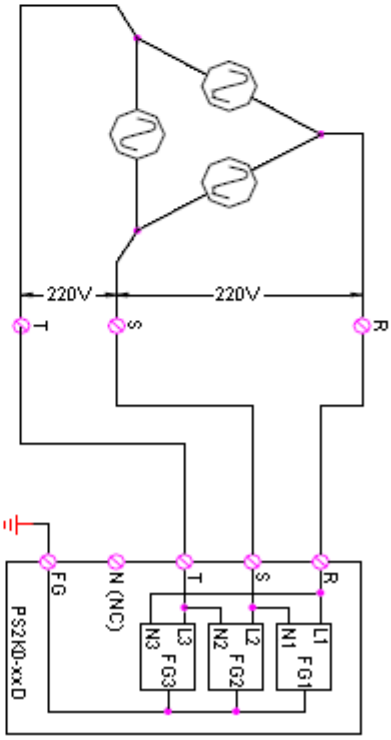

FIG C: 3Ø 3W 220VAC SYSTEM

MECHANICAL DRAWING

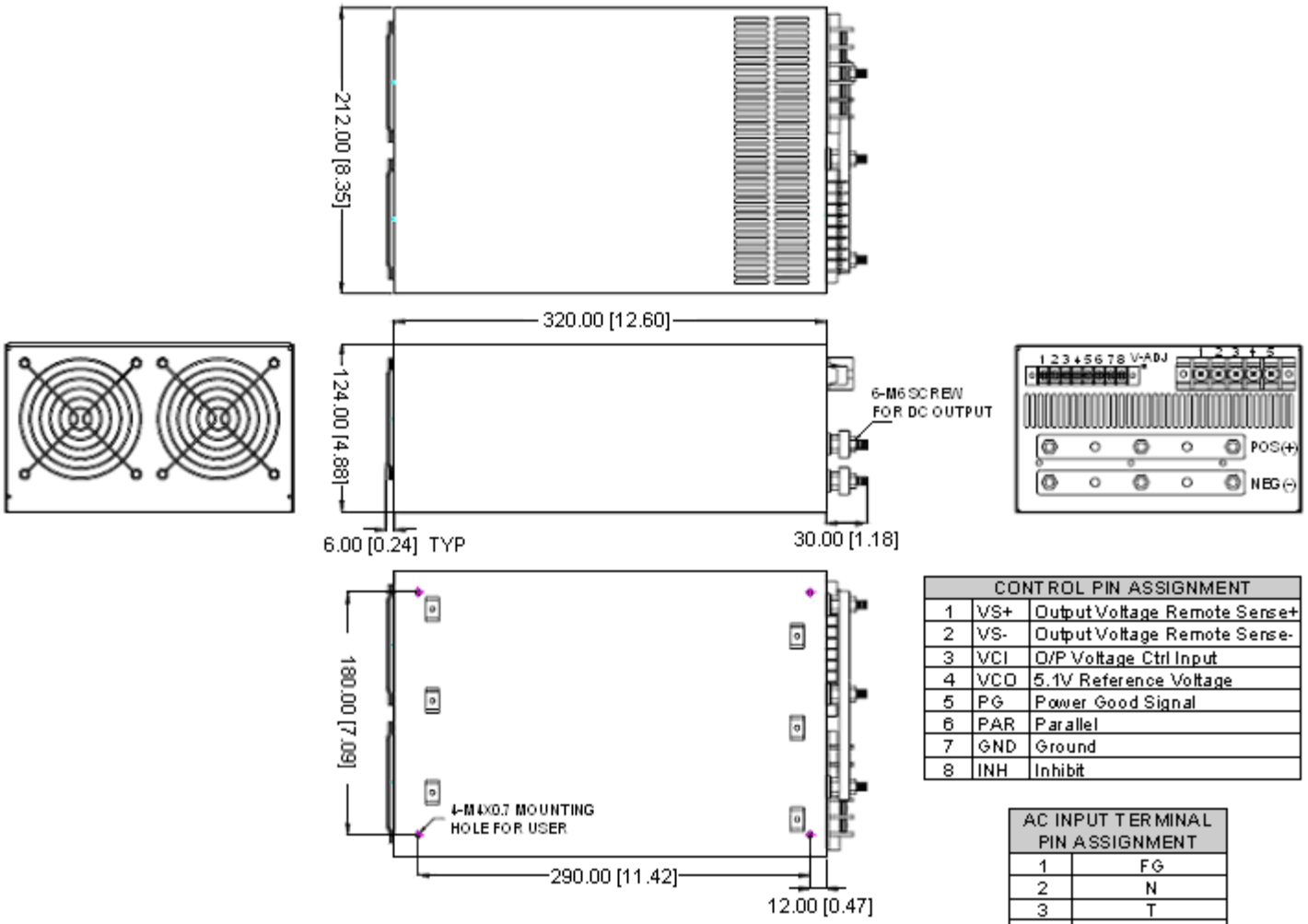

CONTROL PIN ASSIGNMENT		
1	VS+	Output Voltage Remote Sense+
2	VS-	Output Voltage Remote Sense-
3	VCI	O/P Voltage Ctrl Input
4	VCO	5.1V Reference Voltage
5	PG	Power Good Signal
6	PAR	Parallel
7	GND	Ground
8	INH	Inhibit

AC INPUT TERMINAL PIN ASSIGNMENT	
1	FG
2	N
3	T
4	S
5	R