CEL

PHOTOCOUPLER
PS2702-1

HIGH ISOLATION VOLTAGE DARLINGTON TRANSISTOR SOP MULTI PHOTOCOUPLER SERIES

–NEPOC Series–

DESCRIPTION

The PS2702-1 is an optically coupled isolator containing a GaAs light emitting diode and an NPN silicon darlington-connected phototransistor.

This is mounted in a plastic SOP (Small Out-line Package) for high density applications.

This package has shield effect to cut off ambient light.

FEATURES

- High current transfer ratio (CTR = 2 000% TYP.)
- High isolation voltage (BV = 3 750 Vr.m.s.)
- Small and thin (SOP) package
- High-speed switching (t_r, t_f = 200 μs TYP.)
- Ordering number of taping product: PS2702-1-F3, F4
- ★ Safety standards
  - UL approved: File No. E72422
  - BSI approved: File No. 8219/8220
  - CSA approved: File No. CA 101391
  - DIN EN60747-5-2 (VDE0884 Part2) approved (Option)

APPLICATIONS

- Hybrid IC
- Telephone/FAX
- FA/OA equipment
- Programmable logic controllers

The information in this document is subject to change without notice. Before using this document, please confirm that this is the latest version.

Document No. PN10241EJ02V0DS (2nd edition)
Date Published March 2006 CP(K)

The mark ★ shows major revised points.

© NEC Compound Semiconductor Devices, Ltd. 1988, 2006

PACKAGE DIMENSIONS (in millimeters)

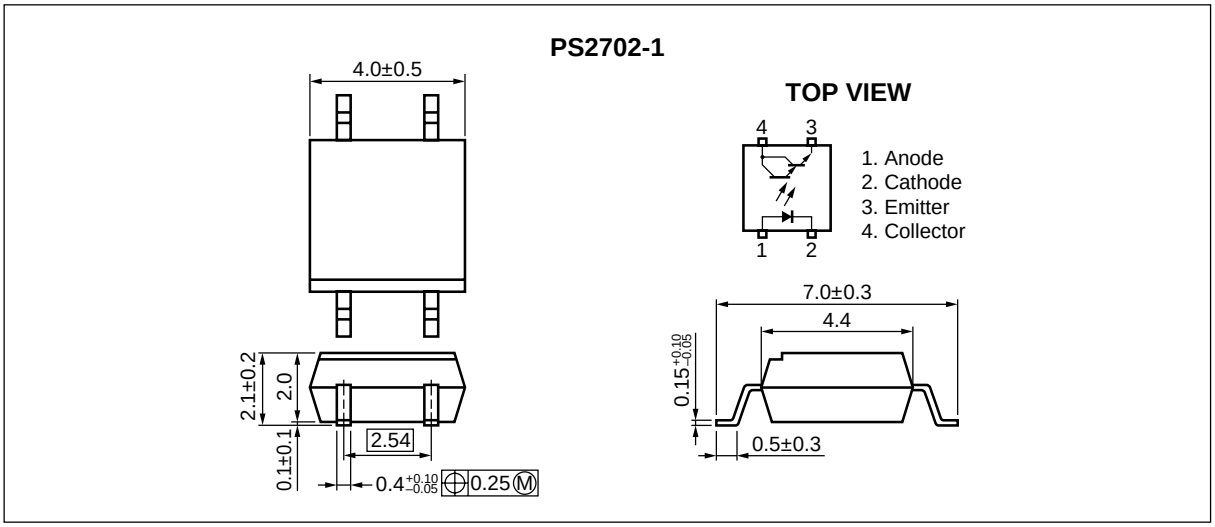

★ MARKING EXAMPLE

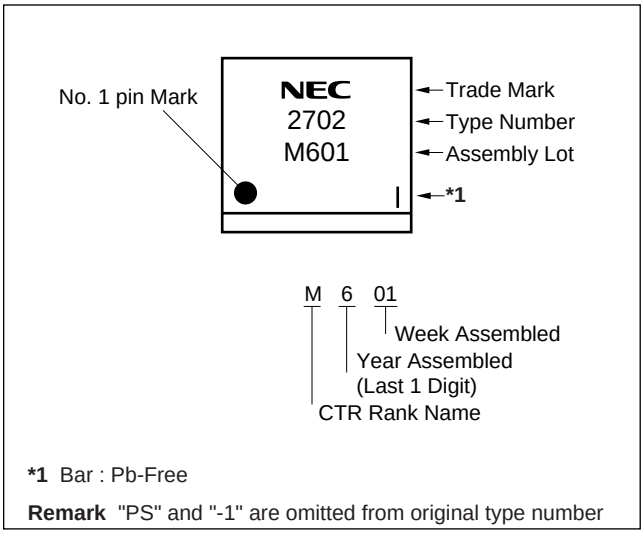

***1** Bar : Pb-Free

Remark "PS" and "-1" are omitted from original type number

★ ORDERING INFORMATION

Part Number	Order Number	Solder Plating Specification	Packing Style	Safety Standard Approval	Application Part Number*1
PS2702-1	PS2702-1-A	Pb-Free	Magazine case 100 pcs	Standard products	PS2702-1
PS2702-1-F3	PS2702-1-F3-A		Embossed Tape 3 500 pcs/reel	(UL, BSI, CSA	
PS2702-1-F4	PS2702-1-F4-A			approved)	
PS2702-1-V	PS2702-1-V-A		Magazine case 100 pcs	DIN EN60747-5-2	
PS2702-1-V-F3	PS2702-1-V-F3-A		Embossed Tape 3 500 pcs/reel	(VDE0884 Part2)	
PS2702-1-V-F4	PS2702-1-V-F4-A			Approved (Option)	

***1** For the application of the Safety Standard, following part number should be used.

ABSOLUTE MAXIMUM RATINGS (T_A = 25°C, unless otherwise specified)

Parameter		Symbol	Ratings	Unit
Diode	Forward Current (DC)	I_F	50	mA
	Reverse Voltage	V_R	6.0	V
	Power Dissipation Derating	ΔP_D/°C	0.8	mW/°C
	Power Dissipation	P_D	80	mW
	Peak Forward Current *1	I_{FP}	1	A
Transistor	Collector to Emitter Voltage	V_{CEO}	40	V
	Emitter to Collector Voltage	V_{ECO}	6	V
	Collector Current	I_C	200	mA
	Power Dissipation Derating	ΔP_C/°C	1.5	mW/°C
	Power Dissipation	P_C	150	mW
Isolation Voltage *2		BV	3 750	Vr.m.s.
Operating Ambient Temperature		T_A	–55 to +100	°C
Storage Temperature		T_{stg}	–55 to +150	°C

***1** PW = 100 μs, Duty Cycle = 1%

***2** AC voltage for 1 minute at T_A = 25°C, RH = 60% between input and output
Pins 1-2 shorted together, 3-4 shorted together.

ELECTRICAL CHARACTERISTICS (T_A = 25 °C)

Parameter		Symbol	Conditions	MIN.	TYP.	MAX.	Unit
Diode	Forward Voltage	V_F	I_F = 5 mA		1.1	1.4	V
	Reverse Current	I_R	V_R = 5 V			5	μA
	Terminal Capacitance	C_t	V = 0 V, f = 1 MHz		30		pF
Transistor	Collector to Emitter Dark Current	I_{CEO}	I_F = 0 mA, V_{CE} = 40 V			400	nA
Coupled	Current Transfer Ratio (I_C/I_F) *1	CTR	I_F = 1 mA, V_{CE} = 2 V	200	2 000		%
	Collector Saturation Voltage	$V_{CE (sat)}$	I_F = 1 mA, I_C = 2 mA			1.0	V
	Isolation Resistance	R_{I-O}	V_{I-O} = 1 kV_{DC}	10^{11}			Ω
	Isolation Capacitance	C_{I-O}	V = 0 V, f = 1 MHz		0.4		pF
	Rise Time *2	t_r	V_{CC} = 5 V, I_C = 2 mA, R_L = 100 Ω		200		μs
	Fall Time *2	t_f			200		

***1** CTR rank

K : 2 000 to (%)

L : 700 to 3 400 (%)

M: 200 to 1 000 (%)

***2** Test circuit for switching time

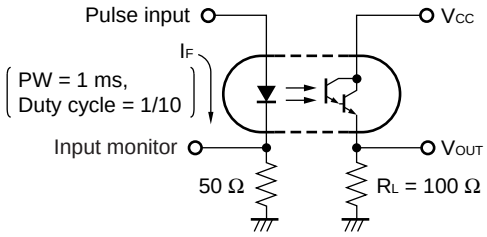

TYPICAL CHARACTERISTICS (T_A = 25°C, unless otherwise specified)

DIODE POWER DISSIPATION vs. AMBIENT TEMPERATURE

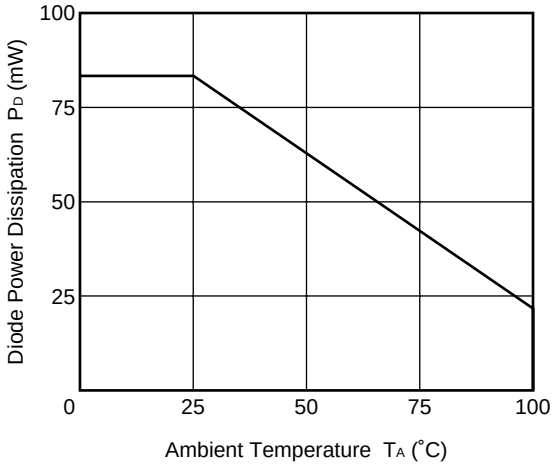

TRANSISTOR POWER DISSIPATION vs. AMBIENT TEMPERATURE

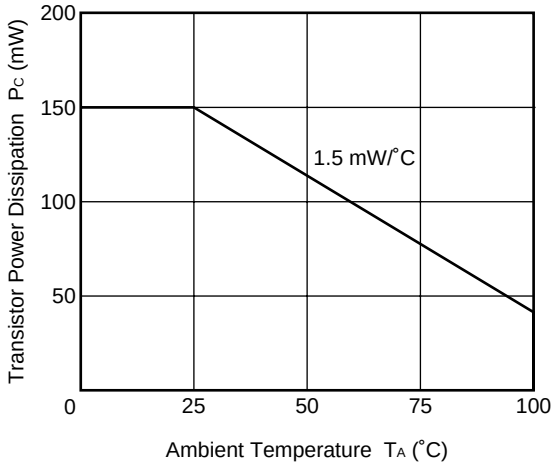

FORWARD CURRENT vs. FORWARD VOLTAGE

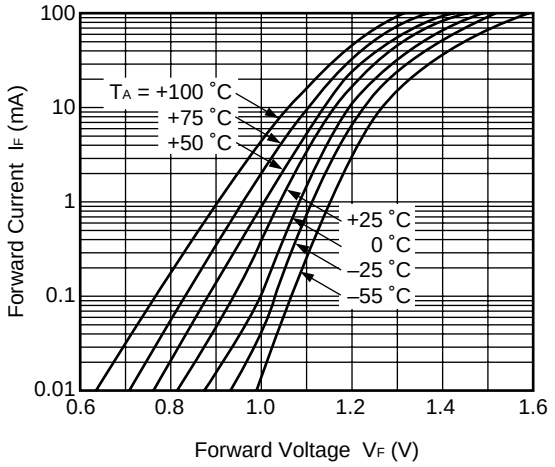

COLLECTOR CURRENT vs. COLLECTOR TO EMITTER VOLTAGE

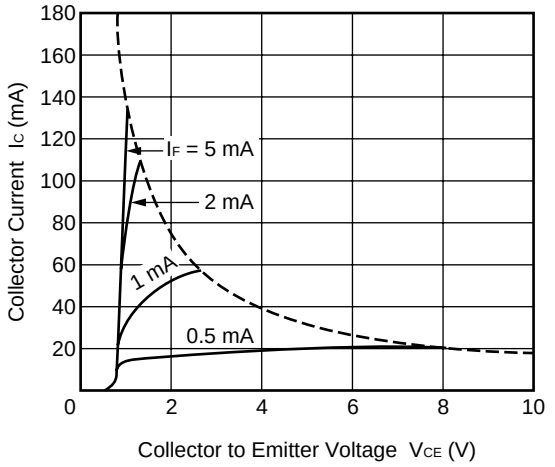

COLLECTOR TO EMITTER DARK CURRENT vs. AMBIENT TEMPERATURE

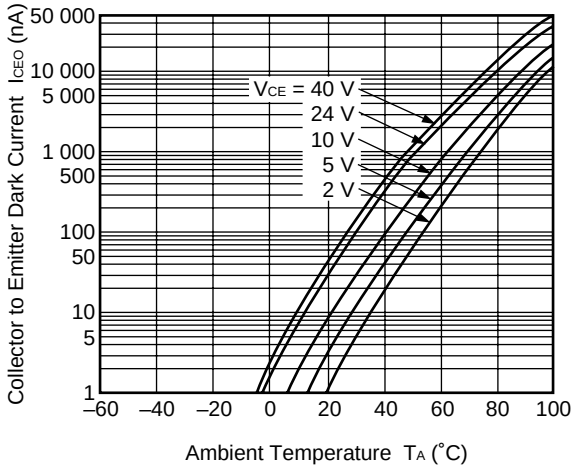

COLLECTOR CURRENT vs. COLLECTOR SATURATION VOLTAGE

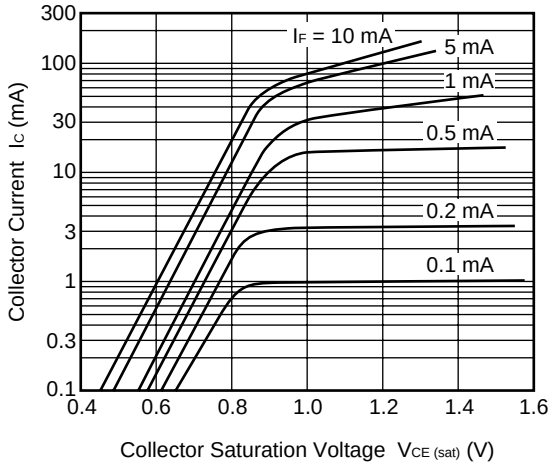

Remark The graphs indicate nominal characteristics.

NORMALIZED CURRENT TRANSFER RATIO vs. AMBIENT TEMPERATURE

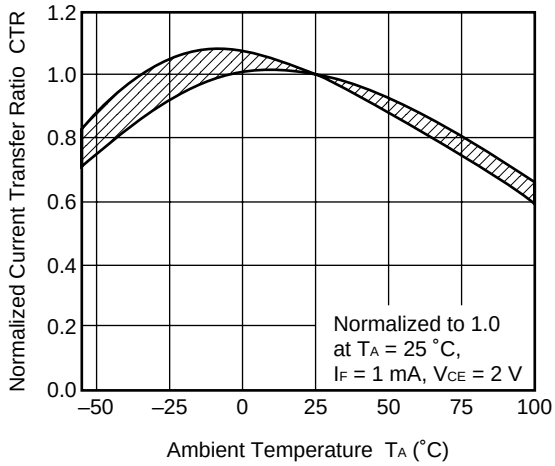

CURRENT TRANSFER RATIO vs. FORWARD CURRENT

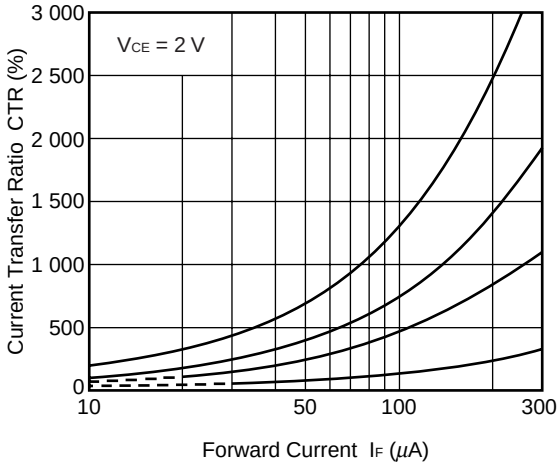

SWITCHING TIME vs. LOAD RESISTANCE

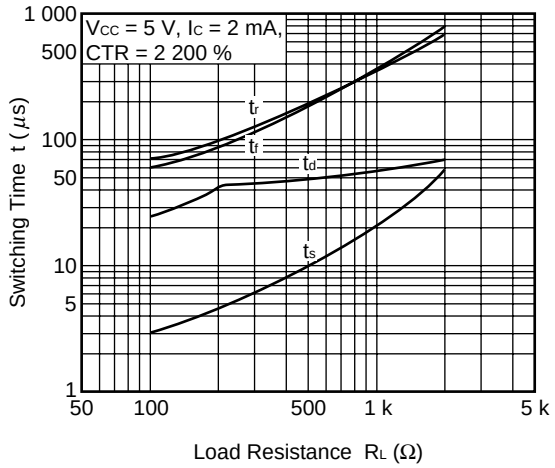

CURRENT TRANSFER RATIO vs. FORWARD CURRENT

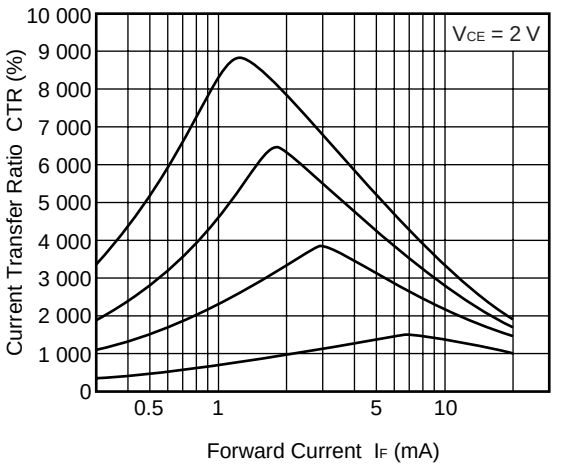

SWITCHING TIME vs. LOAD RESISTANCE

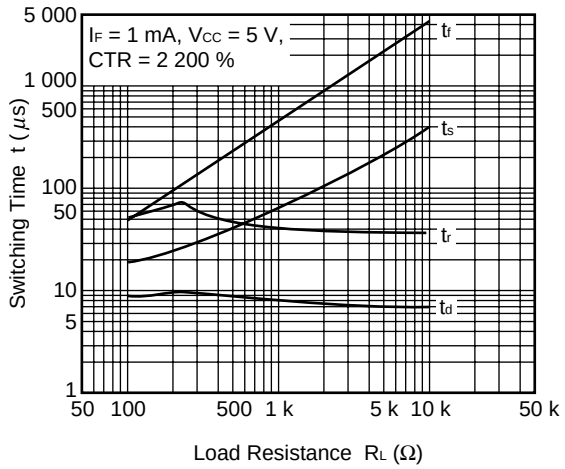

FREQUENCY RESPONSE

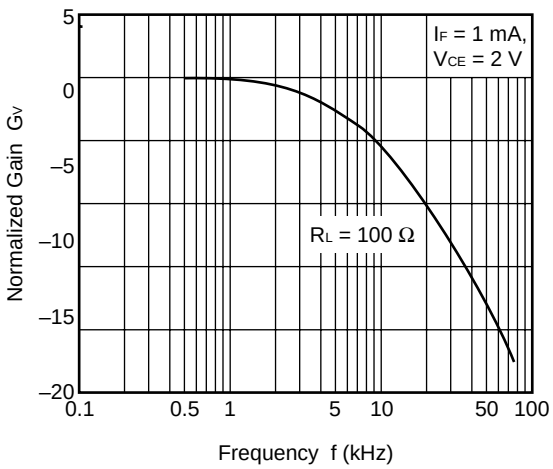

Remark The graphs indicate nominal characteristics.

LONG TERM CTR DEGRADATION

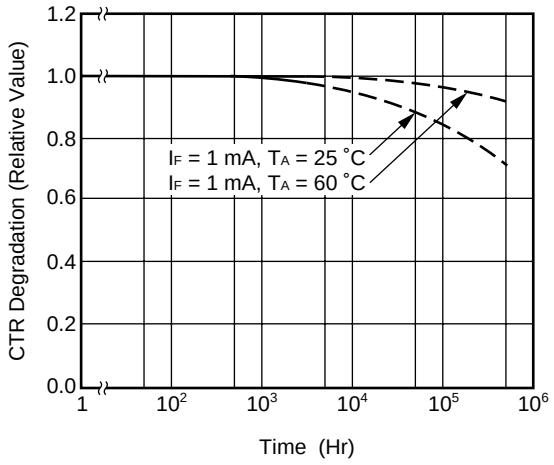

Remark The graph indicates nominal characteristics.

TAPING SPECIFICATIONS (in millimeters)

Outline and Dimensions (Tape)

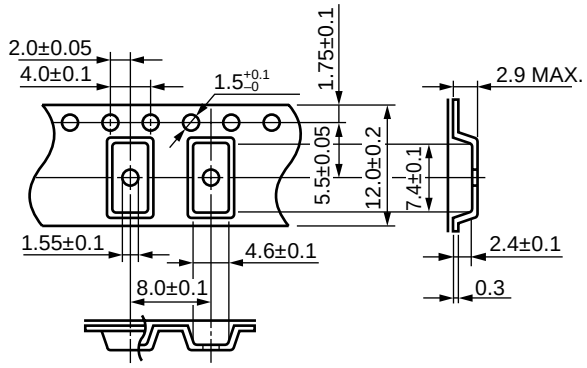

Tape Direction

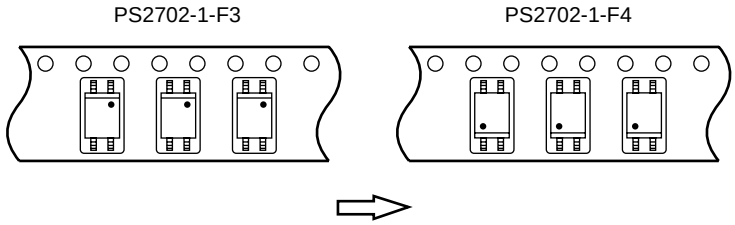

Outline and Dimensions (Reel)

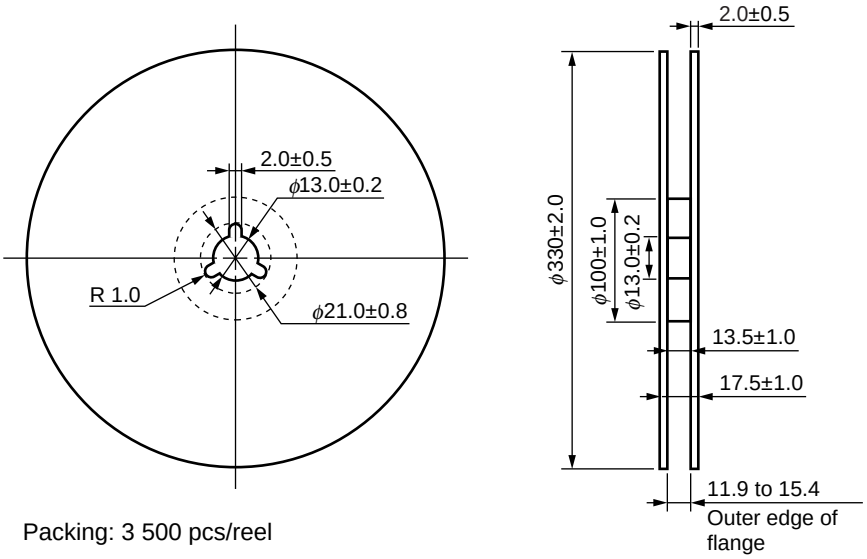

Packing: 3 500 pcs/reel

NOTES ON HANDLING

1. Recommended soldering conditions

(1) Infrared reflow soldering

- Peak reflow temperature — 260°C or below (package surface temperature)
- Time of peak reflow temperature — 10 seconds or less
- Time of temperature higher than 220°C — 60 seconds or less
- Time to preheat temperature from 120 to 180°C — 120±30 s
- Number of reflows — Three
- Flux — Rosin flux containing small amount of chlorine (The flux with a maximum chlorine content of 0.2 Wt% is recommended.)

Recommended Temperature Profile of Infrared Reflow

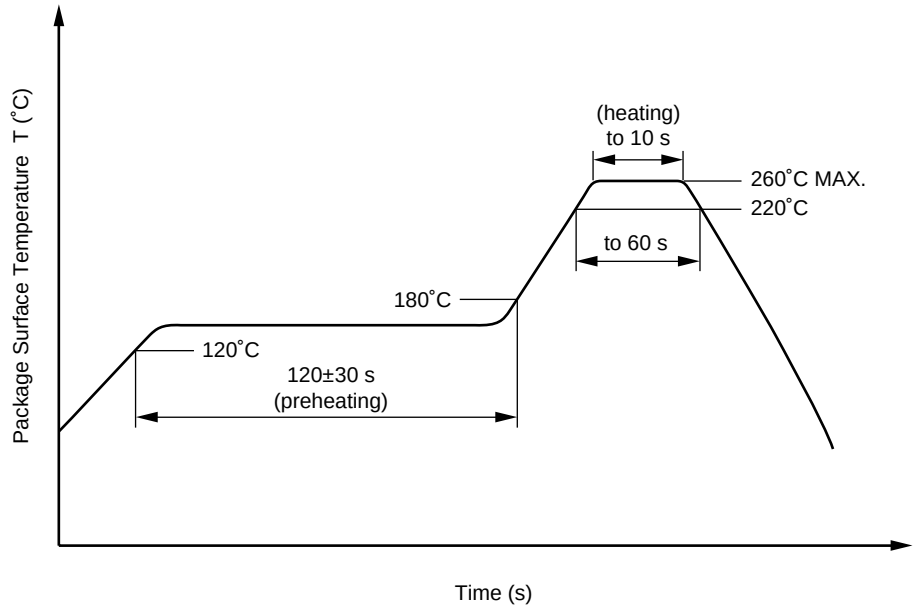

(2) Wave soldering

- Temperature — 260°C or below (molten solder temperature)
- Time — 10 seconds or less
- Preheating conditions — 120°C or below (package surface temperature)
- Number of times — One (Allowed to be dipped in solder including plastic mold portion.)
- Flux — Rosin flux containing small amount of chlorine (The flux with a maximum chlorine content of 0.2 Wt% is recommended.)

★ **(3) Soldering by soldering iron**

- Peak temperature (lead part temperature) — 350°C or below
- Time (each pins) — 3 seconds or less
- Flux — Rosin flux containing small amount of chlorine (The flux with a maximum chlorine content of 0.2 Wt% is recommended.)

(a) Soldering of leads should be made at the point 1.5 to 2.0 mm from the root of the lead.

(b) Please be sure that the temperature of the package would not be heated over 100°C.

(4) Cautions

• Fluxes

Avoid removing the residual flux with freon-based and chlorine-based cleaning solvent.

2. Cautions regarding noise

Be aware that when voltage is applied suddenly between the photocoupler's input and output or between collector-emitters at startup, the output transistor may enter the on state, even if the voltage is within the absolute maximum ratings.

★ 3. Measurement conditions of current transfer ratios (CTR), which differ according to photocoupler

Check the setting values before use, since the forward current conditions at CTR measurement differ according to product.

When using products other than at the specified forward current, the characteristics curves may differ from the standard curves due to CTR value variations or the like. Therefore, check the characteristics under the actual operating conditions and thoroughly take variations or the like into consideration before use.

USAGE CAUTIONS

1. Protect against static electricity when handling.
2. Avoid storage at a high temperature and high humidity.

SPECIFICATION OF VDE MARKS LICENSE DOCUMENT (VDE0884)

Parameter	Symbol	Speck	Unit
Application classification (DIN VDE 0109) for rated line voltages ≤ 300 Vr.m.s. for rated line voltages ≤ 600 Vr.m.s.		 IV III	
Climatic test class (DIN IEC 68 Teil 1/09.80)		55/100/21	
Dielectric strength maximum operating isolation voltage Test voltage (partial discharge test, procedure a for type test and random test) $U_{pr} = 1.2 \times U_{IORM}$, $P_d < 5$ pC	 U_{IORM} U_{pr}	 710 850	 V_{peak} V_{peak}
Test voltage (partial discharge test, procedure b for all devices test) $U_{pr} = 1.6 \times U_{IORM}$, $P_d < 5$ pC	U_{pr}	1 140	V_{peak}
Highest permissible overvoltage	U_{TR}	6 000	V_{peak}
Degree of pollution (DIN VDE 0109)		2	
Clearance distance		> 5	mm
Creepage distance		> 5	mm
Comparative tracking index (DIN IEC 112/VDE 0303 part 1)	CTI	175	
Material group (DIN VDE 0109)		III a	
Storage temperature range	T_{stg}	–55 to +150	°C
Operating temperature range	T_A	–55 to +100	°C
Isolation resistance, minimum value V_{IO} = 500 V dc at T_A = 25 °C V_{IO} = 500 V dc at T_A MAX. at least 100 °C	 Ris MIN. Ris MIN.	 10^{12} 10^{11}	 Ω Ω
Safety maximum ratings (maximum permissible in case of fault, see thermal derating curve) Package temperature Current (input current I_F, Psi = 0) Power (output or total power dissipation) Isolation resistance V_{IO} = 500 V dc at T_A = 175 °C (Tsi)	 Tsi Isi Psi Ris MIN.	 150 200 300 10^9	 °C mA mW Ω

When the product(s) listed in this document is subject to any applicable import or export control laws and regulation of the authority having competent jurisdiction, such product(s) shall not be imported or exported without obtaining the import or export license.

- **The information in this document is current as of March, 2006. The information is subject to change without notice. For actual design-in, refer to the latest publications of NEC's data sheets or data books, etc., for the most up-to-date specifications of NEC semiconductor products. Not all products and/or types are available in every country. Please check with an NEC sales representative for availability and additional information.**
- No part of this document may be copied or reproduced in any form or by any means without prior written consent of NEC. NEC assumes no responsibility for any errors that may appear in this document.
- NEC does not assume any liability for infringement of patents, copyrights or other intellectual property rights of third parties by or arising from the use of NEC semiconductor products listed in this document or any other liability arising from the use of such products. No license, express, implied or otherwise, is granted under any patents, copyrights or other intellectual property rights of NEC or others.
- Descriptions of circuits, software and other related information in this document are provided for illustrative purposes in semiconductor product operation and application examples. The incorporation of these circuits, software and information in the design of customer's equipment shall be done under the full responsibility of customer. NEC assumes no responsibility for any losses incurred by customers or third parties arising from the use of these circuits, software and information.
- While NEC endeavours to enhance the quality, reliability and safety of NEC semiconductor products, customers agree and acknowledge that the possibility of defects thereof cannot be eliminated entirely. To minimize risks of damage to property or injury (including death) to persons arising from defects in NEC semiconductor products, customers must incorporate sufficient safety measures in their design, such as redundancy, fire-containment, and anti-failure features.
- NEC semiconductor products are classified into the following three quality grades:
  "Standard", "Special" and "Specific". The "Specific" quality grade applies only to semiconductor products developed based on a customer-designated "quality assurance program" for a specific application. The recommended applications of a semiconductor product depend on its quality grade, as indicated below. Customers must check the quality grade of each semiconductor product before using it in a particular application.
  "Standard": Computers, office equipment, communications equipment, test and measurement equipment, audio and visual equipment, home electronic appliances, machine tools, personal electronic equipment and industrial robots
  "Special": Transportation equipment (automobiles, trains, ships, etc.), traffic control systems, anti-disaster systems, anti-crime systems, safety equipment and medical equipment (not specifically designed for life support)
  "Specific": Aircraft, aerospace equipment, submersible repeaters, nuclear reactor control systems, life support systems and medical equipment for life support, etc.
  The quality grade of NEC semiconductor products is "Standard" unless otherwise expressly specified in NEC's data sheets or data books, etc. If customers wish to use NEC semiconductor products in applications not intended by NEC, they must contact an NEC sales representative in advance to determine NEC's willingness to support a given application.
  (Note)
  (1) "NEC" as used in this statement means NEC Corporation, NEC Compound Semiconductor Devices, Ltd. and also includes its majority-owned subsidiaries.
  (2) "NEC semiconductor products" means any semiconductor product developed or manufactured by or for NEC (as defined above).

M8E 00.4-0110

Caution GaAs Products	This product uses gallium arsenide (GaAs). GaAs vapor and powder are hazardous to human health if inhaled or ingested, so please observe the following points. • Follow related laws and ordinances when disposing of the product. If there are no applicable laws and/or ordinances, dispose of the product as recommended below. 1. Commission a disposal company able to (with a license to) collect, transport and dispose of materials that contain arsenic and other such industrial waste materials. 2. Exclude the product from general industrial waste and household garbage, and ensure that the product is controlled (as industrial waste subject to special control) up until final disposal. • Do not burn, destroy, cut, crush, or chemically dissolve the product. • Do not lick the product or in any way allow it to enter the mouth.

▶**For further information, please contact**

NEC Compound Semiconductor Devices, Ltd. **http://www.ncsd.necel.com/**
E-mail: salesinfo@ml.ncsd.necel.com (sales and general)
techinfo@ml.ncsd.necel.com (technical)
Sales Division TEL: +81-44-435-1573 FAX: +81-44-435-1579

NEC Compound Semiconductor Devices Hong Kong Limited
E-mail: ncsd-hk@elhk.nec.com.hk (sales, technical and general)
Hong Kong Head Office TEL: +852-3107-7303 FAX: +852-3107-7309
Taipei Branch Office TEL: +886-2-8712-0478 FAX: +886-2-2545-3859
Korea Branch Office TEL: +82-2-558-2120 FAX: +82-2-558-5209

NEC Electronics (Europe) GmbH **http://www.ee.nec.de/**
TEL: +49-211-6503-0 FAX: +49-211-6503-1327

California Eastern Laboratories, Inc. **http://www.cel.com/**
TEL: +1-408-988-3500 FAX: +1-408-988-0279

0504

CEL California Eastern Laboratories

4590 Patrick Henry Drive
Santa Clara, CA 95054-1817
Telephone: (408) 919-2500
Facsimile: (408) 988-0279

Subject: Compliance with EU Directives

CEL certifies, to its knowledge, that semiconductor and laser products detailed below are compliant with the requirements of European Union (EU) Directive 2002/95/EC Restriction on Use of Hazardous Substances in electrical and electronic equipment (RoHS) and the requirements of EU Directive 2003/11/EC Restriction on Penta and Octa BDE.

CEL Pb-free products have the same base part number with a suffix added. The suffix –A indicates that the device is Pb-free. The –AZ suffix is used to designate devices containing Pb which are exempted from the requirement of RoHS directive (*). In all cases the devices have Pb-free terminals. All devices with these suffixes meet the requirements of the RoHS directive.

This status is based on CEL's understanding of the EU Directives and knowledge of the materials that go into its products as of the date of disclosure of this information.

Restricted Substance per RoHS	Concentration Limit per RoHS (values are not yet fixed)	Concentration contained in CEL devices	
Lead (Pb)	< 1000 PPM	-A	-AZ
		Not Detected	(*)
Mercury	< 1000 PPM	Not Detected	
Cadmium	< 100 PPM	Not Detected	
Hexavalent Chromium	< 1000 PPM	Not Detected	
PBB	< 1000 PPM	Not Detected	
PBDE	< 1000 PPM	Not Detected	

If you should have any additional questions regarding our devices and compliance to environmental standards, please do not hesitate to contact your local representative.

Important Information and Disclaimer: Information provided by CEL on its website or in other communications concerting the substance content of its products represents knowledge and belief as of the date that it is provided. CEL bases its knowledge and belief on information provided by third parties and makes no representation or warranty as to the accuracy of such information. Efforts are underway to better integrate information from third parties. CEL has taken and continues to take reasonable steps to provide representative and accurate information but may not have conducted destructive testing or chemical analysis on incoming materials and chemicals. CEL and CEL suppliers consider certain information to be proprietary, and thus CAS numbers and other limited information may not be available for release.
In no event shall CEL's liability arising out of such information exceed the total purchase price of the CEL part(s) at issue sold by CEL to customer on an annual basis.
See CEL Terms and Conditions for additional clarification of warranties and liability.