DATA SHEET

NEC

PHOTOCOUPLER

PS2701-1,PS2701-2,PS2701-4

HIGH ISOLATION VOLTAGE SOP MULTI PHOTOCOUPLER

–NEPOC™ Series–

DESCRIPTION

The PS2701-1, PS2701-2, PS2701-4, are optically coupled isolators containing a GaAs light emitting diode and an NPN silicon phototransistor.

This package is SOP (Small Outline Package) type and has shield effect to cut off ambient light.

It is designed for high density mounting applications.

FEATURES

- High isolation voltage (BV = 3 750 Vr.m.s.)
- SOP (Small Outline Package) type
- High-speed switching (t_r = 3 μs TYP., t_f = 5 μs TYP.)
- Ordering number of taping product (only 1-channel type) : PS2701-1-E3, E4, F3, F4
- UL approved: File No. E72422 (S)
- VDE0884 approved (Option)

APPLICATIONS

- Hybrid IC
- Measuring instruments
- Power supply
- Programmable logic controllers

ORDERING INFORMATION

Part Number	Package	Safety Standard Approval
PS2701-1	4-pin SOP	Standard products • UL approved
PS2701-2	8-pin SOP	
PS2701-4	16-pin SOP	
PS2701-1-V	4-pin SOP	VDE0884 approved products (Option)
PS2701-2-V	8-pin SOP	
PS2701-4-V	16-pin SOP	

The information in this document is subject to change without notice.

Document No. P11306EJ6V0DS00 (6th edition)
Date Published December 1997 NS CP (K)
Printed in Japan

The mark ★ shows major revised points.

© NEC Corporation 1988

PACKAGE DIMENSIONS (in millimeters)

PS2701-1

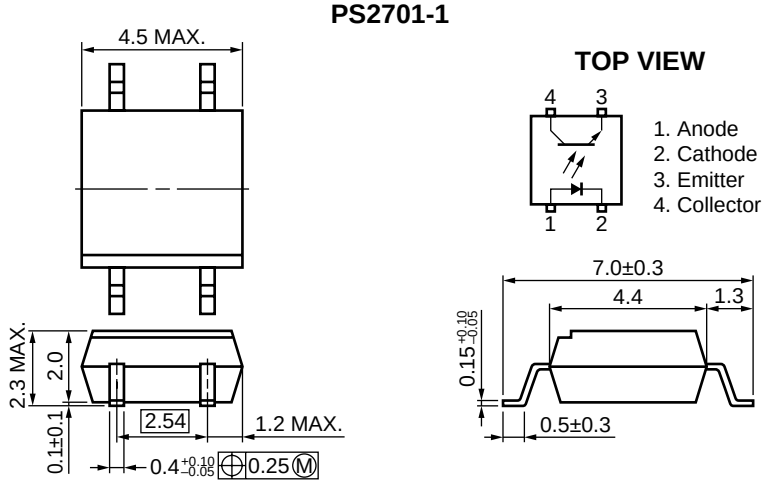

PS2701-2

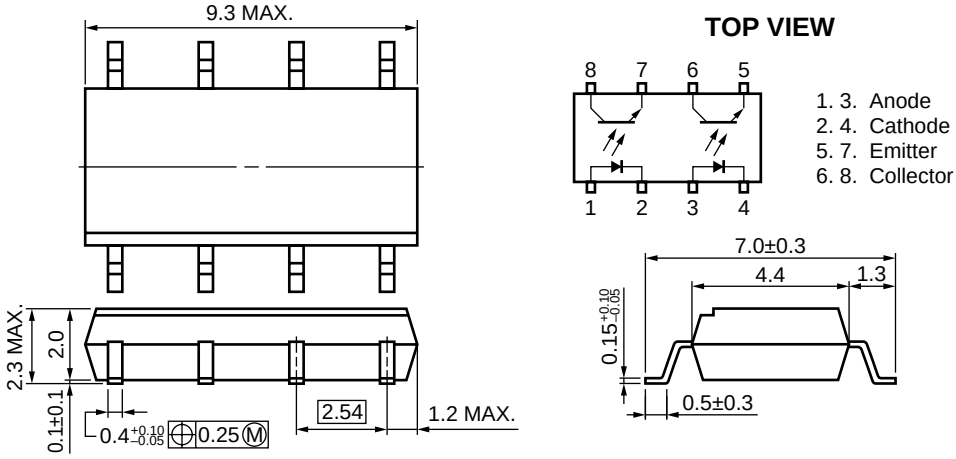

PS2701-4

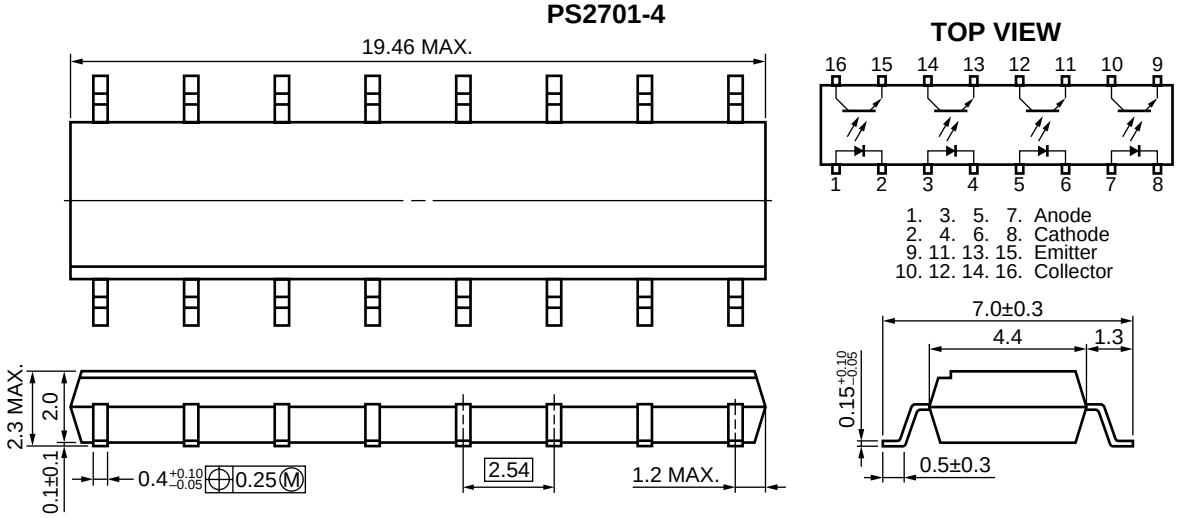

ABSOLUTE MAXIMUM RATINGS (T_A = 25 °C, unless otherwise specified)

Parameter		Symbol	Ratings		Unit
			PS2701-1	PS2701-2, PS2701-4	
Diode	Forward Current (DC)	I_F	50		mA
	Reverse Voltage	V_R	6		V
	Power Dissipation Derating	ΔP_D/°C	0.8		mW/°C
	Power Dissipation	P_D	80		mW/ch
	Peak Forward Current*1	I_{FP}	1		A
Transistor	Collector to Emitter Voltage	V_{CEO}	40		V
	Emitter to Collector Voltage	V_{ECO}	6		V
	Collector Current	I_C	80		mA/ch
	Power Dissipation Derating	ΔP_C/°C	1.5	1.2	mW/°C
	Power Dissipation	P_C	150	120	mW/ch
Isolation Voltage*2		BV	3 750		Vr.m.s.
Operating Ambient Temperature		T_A	–55 to +100		°C
Storage Temperature		T_{stg}	–55 to +150		°C

***1** PW = 100 μs, Duty Cycle = 1 %

***2** AC voltage for 1 minute at T_A = 25 °C, RH = 60 % between input and output

ELECTRICAL CHARACTERISTICS (T_A = 25 °C)

Parameter		Symbol	Conditions	MIN.	TYP.	MAX.	Unit
Diode	Forward Voltage	V_F	I_F = 5 mA		1.1	1.4	V
	Reverse Current	I_R	V_R = 5 V			5	μA
	Terminal Capacitance	C_t	V = 0 V, f = 1 MHz		30		pF
Transistor	Collector to Emitter Current	I_{CEO}	I_F = 0 mA, V_{CE} = 40 V			100	nA
Coupled	Current Transfer Ratio*1	CTR	I_F = 5 mA, V_{CE} = 5 V	50	100	300	%
	Collector Saturation Voltage	$V_{CE (sat)}$	I_F = 10 mA, I_C = 2 mA			0.3	V
	Isolation Resistance	R_{I-O}	V_{I-O} = 1 kV_{DC}	10^{11}			Ω
	Isolation Capacitance	C_{I-O}	V = 0 V, f = 1 MHz		0.4		pF
	Rise Time *2	t_r	V_{CC} = 5 V, I_C = 2 mA, R_L = 100 Ω		3		μs
	Fall Time *2	t_f			5		

***1** CTR rank (only PS2701-1)

★ P: 150 to 300 (%)

L: 100 to 300 (%)

M: 50 to 150 (%)

***2** Test circuit for switching time

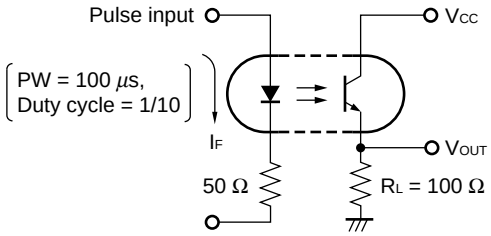

★ **TYPICAL CHARACTERISTICS (T_A = 25 °C, unless otherwise specified)**

DIODE POWER DISSIPATION vs. AMBIENT TEMPERATURE

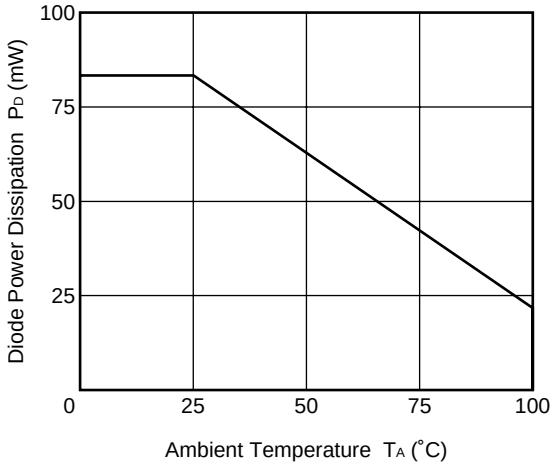

TRANSISTOR POWER DISSIPATION vs. AMBIENT TEMPERATURE

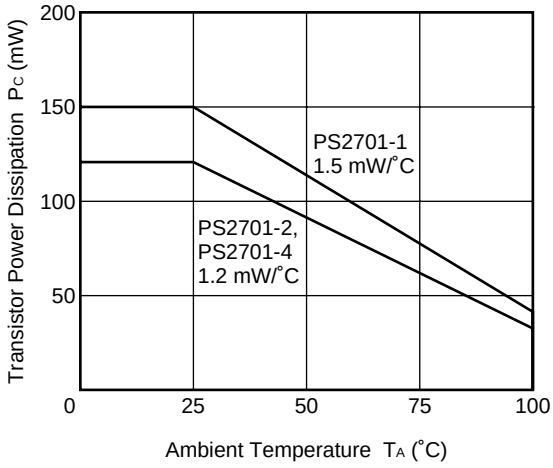

FORWARD CURRENT vs. FORWARD VOLTAGE

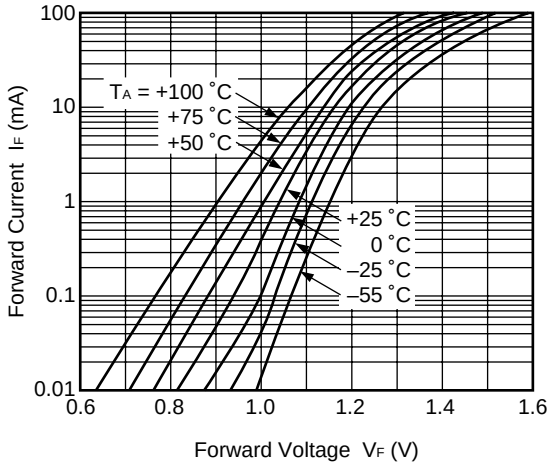

COLLECTOR CURRENT vs. COLLECTOR TO EMITTER VOLTAGE

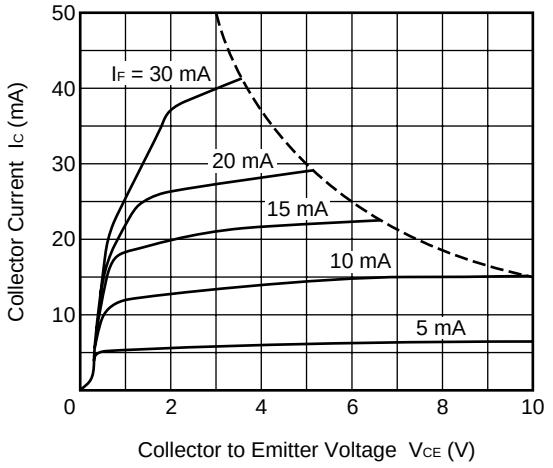

COLLECTOR TO EMITTER DARK CURRENT vs. AMBIENT TEMPERATURE

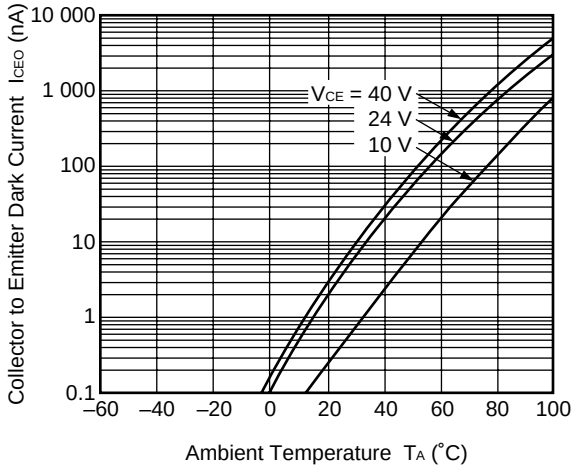

COLLECTOR CURRENT vs. COLLECTOR SATURATION VOLTAGE

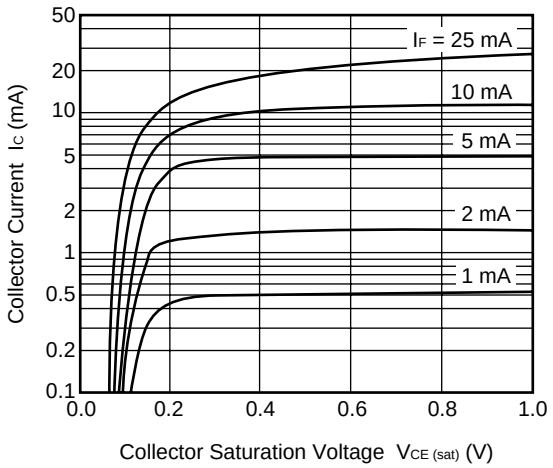

NORMALIZED CURRENT TRANSFER RATIO vs. AMBIENT TEMPERATURE

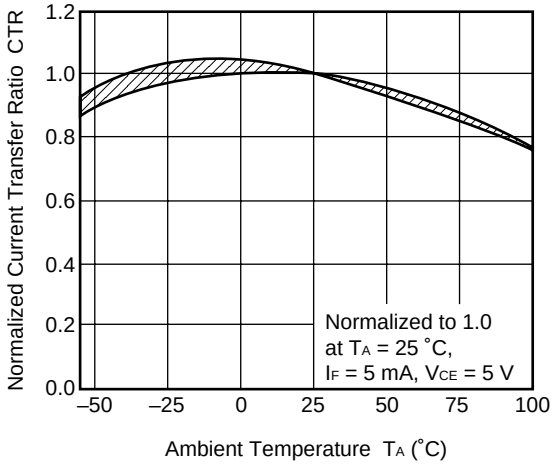

CURRENT TRANSFER RATIO vs. FORWARD CURRENT

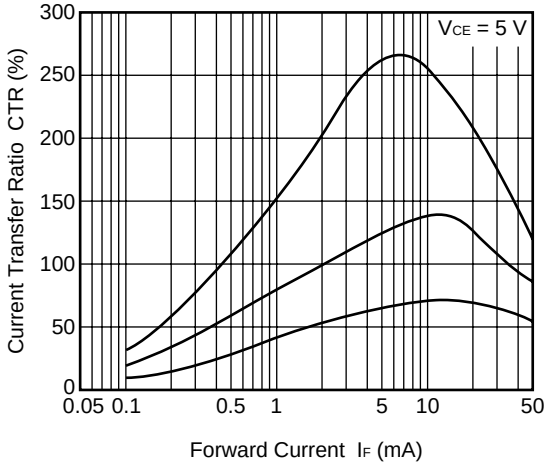

SWITCHING TIME vs. LOAD RESISTANCE

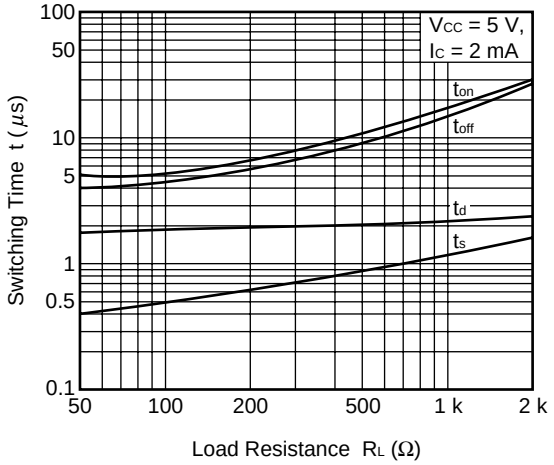

FREQUENCY RESPONSE

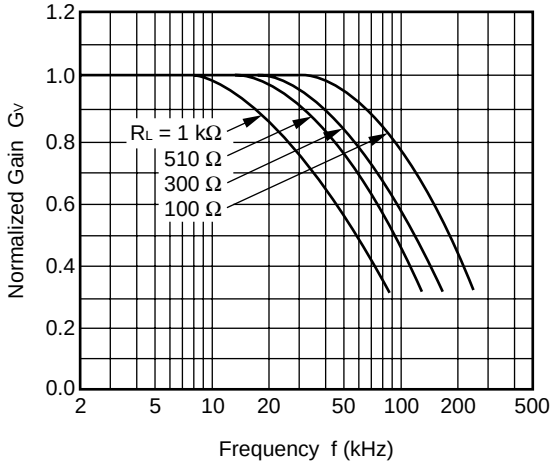

SWITCHING TIME vs. LOAD RESISTANCE

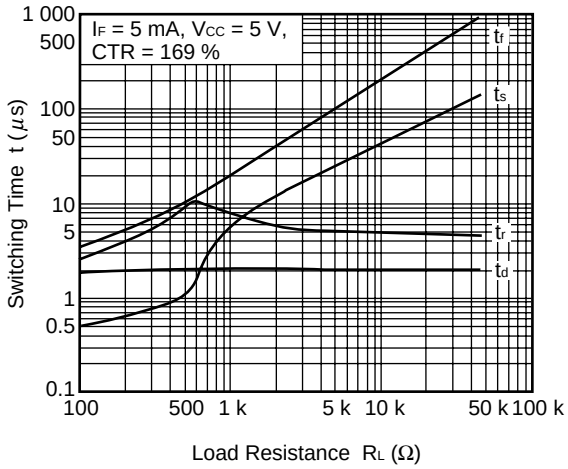

LONG TERM CTR DEGRADATION

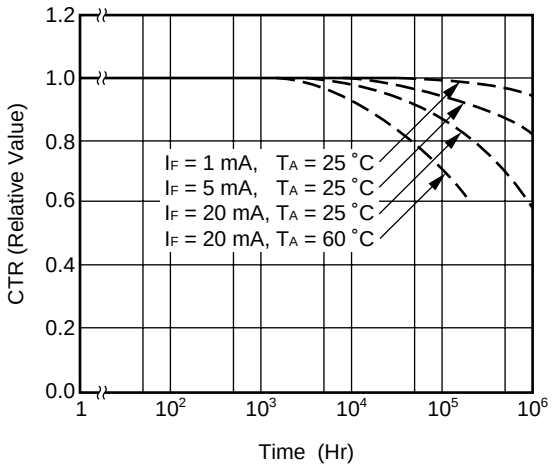

Remark The measurement of TYPICAL CHARACTERISTICS are only for reference, not guaranteed.

TAPING SPECIFICATIONS (in millimeters)

Outline and Dimensions (Tape)

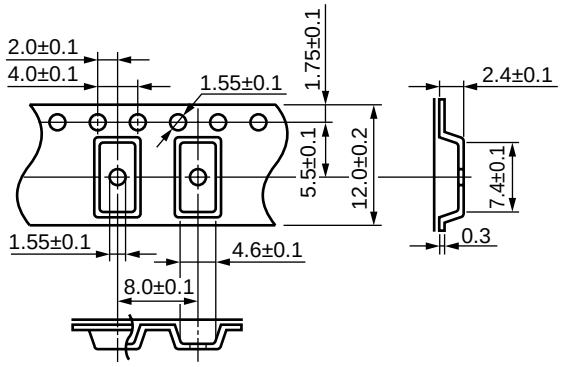

Tape Direction

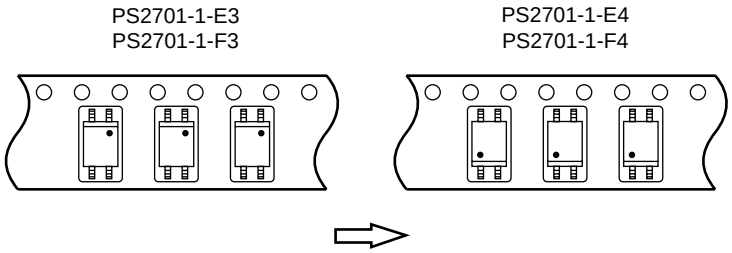

Outline and Dimensions (Reel)

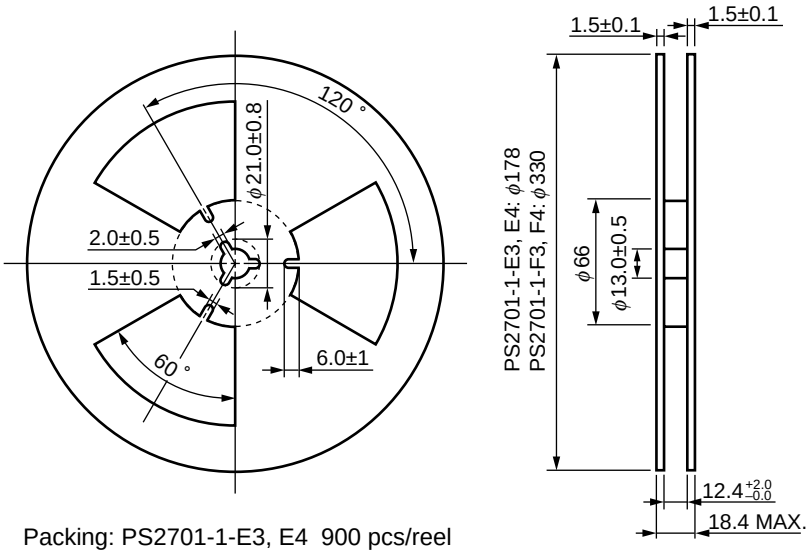

Packing: PS2701-1-E3, E4 900 pcs/reel
PS2701-1-F3, F4 3 500 pcs/reel

RECOMMENDED SOLDERING CONDITIONS

(1) Infrared reflow soldering

- Peak reflow temperature — 235 °C (package surface temperature)
- Time of temperature higher than 210 °C — 30 seconds or less
- Number of reflows — Three
- Flux — Rosin flux containing small amount of chlorine (The flux with a maximum chlorine content of 0.2 Wt % is recommended.)

Recommended Temperature Profile of Infrared Reflow

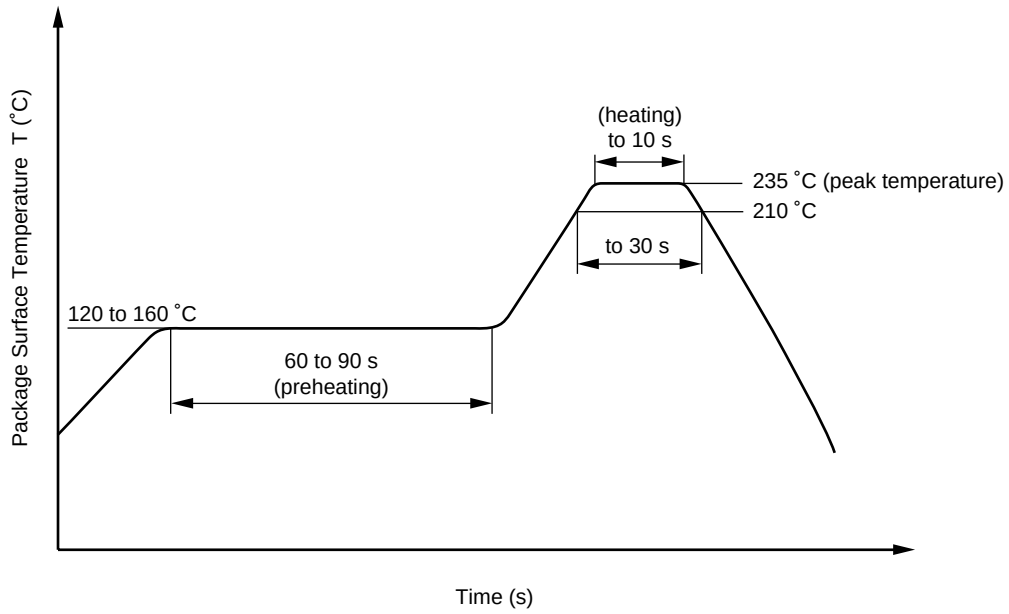

Caution Please avoid to removed the residual flux by water after the first reflow processes.

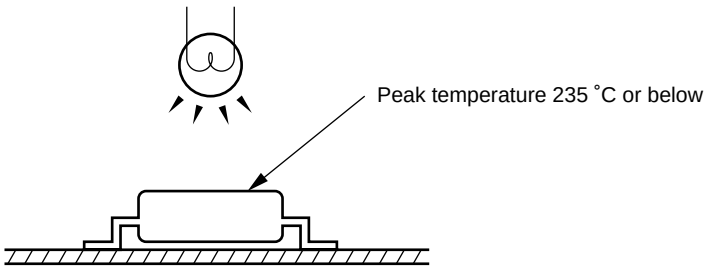

(2) Dip soldering

- Temperature — 260 °C or below (molten solder temperature)
- Time — 10 seconds or less
- Number of times — One
- Flux — Rosin flux containing small amount of chlorine (The flux with a maximum chlorine content of 0.2 Wt % is recommended.)

SPECIFICATION OF VDE MARKS LICENSE DOCUMENT (VDE0884)

Parameter	Symbol	Speck	Unit
Application classification (DIN VDE 0109)			
for rated line voltages ≤ 300 Vr.m.s.		IV	
for rated line voltages ≤ 600 Vr.m.s.		III	
Climatic test class (DIN IEC 68 Teil 1/09.80)		55/100/21	
Dielectric strength			
Maximum operating isolation voltage	U_{IORM}	710	V_{peak}
Test voltage (partial discharge test, procedure a for type test and random test)	U_{pr}	850	V_{peak}
$U_{pr} = 1.2 \times U_{IORM}$, $P_d < 5$ pC			
Test voltage (partial discharge test, procedure b for random test) $U_{pr} = 1.6 \times U_{IORM}$, $P_d < 5$ pC	U_{pr}	1 140	V_{peak}
Highest permissible overvoltage	U_{TR}	6 000	V_{peak}
Degree of pollution (DIN VDE 0109)		2	
Clearance distance		> 5	mm
Creepage distance		> 5	mm
Comparative tracking index (DIN IEC 112/VDE 0303 part 1)	CTI	175	
Material group (DIN VDE 0109)		III a	
Storage temperature range	T_{stg}	–55 to +150	°C
Operating temperature range	T_A	–55 to +100	°C
Isolation resistance, minimum value			
V_{IO} = 500 V dc at T_A = 25 °C	Ris MIN.	10^{12}	Ω
V_{IO} = 500 V dc at T_A MAX. at least 100 °C	Ris MIN.	10^{11}	Ω
Safety maximum ratings (maximum permissible in case of fault, see thermal derating curve)			
Package temperature	Tsi	150	°C
Current (input current I_F, Psi = 0)	Isi	200	mA
Power (output or total power dissipation)	Psi	300	mW
Isolation resistance			
V_{IO} = 500 V dc at T_A = 175 °C (Tsi)	Ris MIN.	10^9	Ω

[MEMO]

[MEMO]

CAUTION

Within this device there exists GaAs (Gallium Arsenide) material which is a harmful substance if ingested. Please do not under any circumstances break the hermetic seal.

NEPOC is a trademark of NEC Corporation.

No part of this document may be copied or reproduced in any form or by any means without the prior written consent of NEC Corporation. NEC Corporation assumes no responsibility for any errors which may appear in this document.
NEC Corporation does not assume any liability for infringement of patents, copyrights or other intellectual property rights of third parties by or arising from use of a device described herein or any other liability arising from use of such device. No license, either express, implied or otherwise, is granted under any patents, copyrights or other intellectual property rights of NEC Corporation or others.
While NEC Corporation has been making continuous effort to enhance the reliability of its semiconductor devices, the possibility of defects cannot be eliminated entirely. To minimize risks of damage or injury to persons or property arising from a defect in an NEC semiconductor device, customers must incorporate sufficient safety measures in its design, such as redundancy, fire-containment, and anti-failure features.
NEC devices are classified into the following three quality grades:
"Standard", "Special", and "Specific". The Specific quality grade applies only to devices developed based on a customer designated "quality assurance program" for a specific application. The recommended applications of a device depend on its quality grade, as indicated below. Customers must check the quality grade of each device before using it in a particular application.

Standard: Computers, office equipment, communications equipment, test and measurement equipment, audio and visual equipment, home electronic appliances, machine tools, personal electronic equipment and industrial robots

Special: Transportation equipment (automobiles, trains, ships, etc.), traffic control systems, anti-disaster systems, anti-crime systems, safety equipment and medical equipment (not specifically designed for life support)

Specific: Aircrafts, aerospace equipment, submersible repeaters, nuclear reactor control systems, life support systems or medical equipment for life support, etc.

The quality grade of NEC devices is "Standard" unless otherwise specified in NEC's Data Sheets or Data Books. If customers intend to use NEC devices for applications other than those specified for Standard quality grade, they should contact an NEC sales representative in advance.
Anti-radioactive design is not implemented in this product.

M4 96.5