CEL

PHOTOCOUPLER

PS2501A-1,PS2501AL-1

HIGH ISOLATION VOLTAGE SINGLE TRANSISTOR TYPE MULTI PHOTOCOUPLER SERIES

–NEPOC Series–

DESCRIPTION

The PS2501A-1 and PS2501AL-1 are optically coupled isolators containing a GaAs light emitting diode and an NPN silicon phototransistor to realize an excellent cost performance.

The PS2501A-1 is in a plastic DIP (Dual In-line Package) and the PS2501AL-1 is lead bending type (Gull-wing) for surface mount.

FEATURES

- High isolation voltage (BV = 5 000 Vr.m.s.)
- ★ • Ordering number of taping product: PS2501AL-1-F3: 2 000 pcs/reel
- Pb-Free product
- Safety standards
  - UL approved: No. E72422

PIN CONNECTION

(Top View)

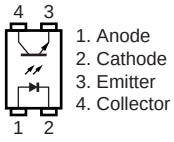

1. Anode
2. Cathode
3. Emitter
4. Collector

APPLICATIONS

- Power supply
- Telephone/FAX.
- FA/OA equipment
- Programmable logic controller

The information in this document is subject to change without notice. Before using this document, please confirm that this is the latest version.

Document No. PN10221EJ06V0DS (6th edition)
Date Published February 2010 NS

The mark ★ shows major revised points.

The revised points can be easily searched by copying an "★" in the PDF file and specifying it in the "Find what:" field.

PACKAGE DIMENSIONS (UNIT : mm)

DIP Type

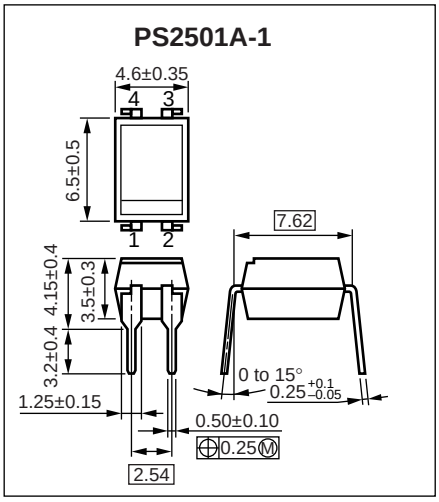

Lead Bending Type

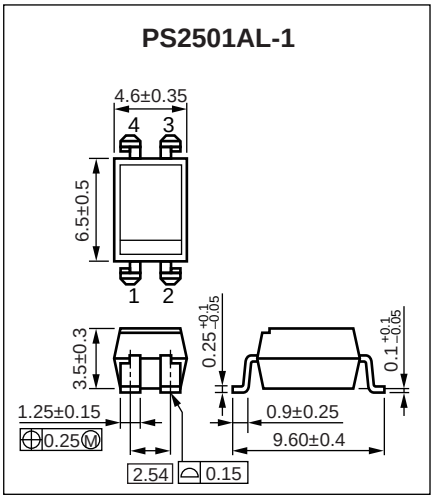

★ PHOTOCOUPLER CONSTRUCTION

Parameter	Unit (MIN.)
Air Distance	7 mm
Outer Creepage Distance	7 mm
Inner Creepage Distance	3.5 mm
Isolation Distance	0.3 mm

★ MARKING EXAMPLE

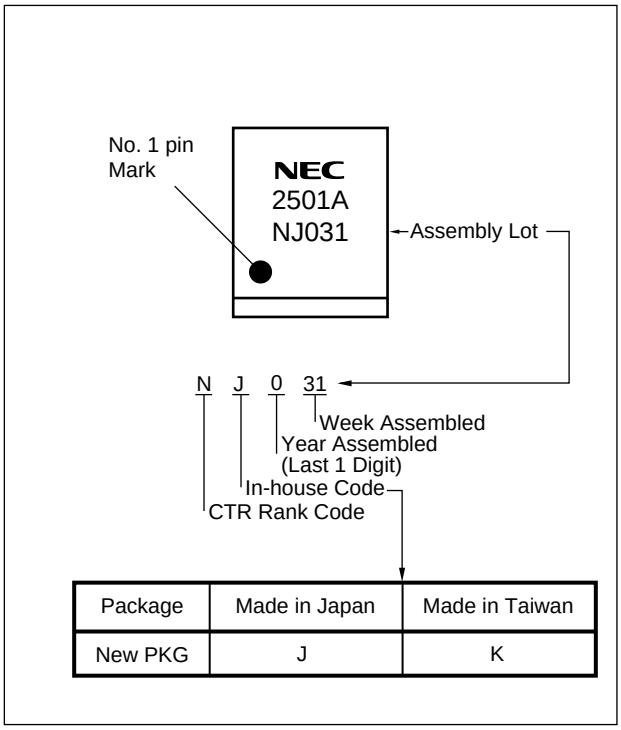

Package	Made in Japan	Made in Taiwan
New PKG	J	K

★ ORDERING INFORMATION

Part Number	Order Number	Solder Plating Specification	Packing Style	Safety Standard Approval	Application Part Number *1
PS2501A-1	PS2501A-1-A	Pb-Free	Magazine case 100 pcs	Standard products (UL Approved)	PS2501A-1
PS2501AL-1	PS2501AL-1-A				
PS2501AL-1-F3	PS2501AL-1-F3-A		Embossed Tape 2 000 pcs/reel		

***1** For the application of the Safety Standard, following part number should be used.

ABSOLUTE MAXIMUM RATINGS (T_A = 25°C, unless otherwise specified)

Parameter		Symbol	Ratings	Unit
Diode	Reverse Voltage	V_R	6	V
	Forward Current (DC)	I_F	30	mA/ch
	Power Dissipation Derating	ΔP_D/°C	1.5	mW/°C
	Power Dissipation	P_D	150	mW
	Peak Forward Current*1	I_{FP}	0.5	A/ch
Transistor	Collector to Emitter Voltage	V_{CEO}	70	V
	Emitter to Collector Voltage	V_{ECO}	5	V
	Collector Current	I_C	30	mA
	Power Dissipation Delay	ΔP_C/°C	1.5	mW/°C
	Power Dissipation	P_C	150	mW
Isolation Voltage*2		BV	5 000	Vr.m.s.
Operating Ambient Temperature		T_A	–55 to +100	°C
Storage Temperature		T_{stg}	–55 to +150	°C

***1** PW = 100 μs, Duty Cycle = 1%

***2** AC voltage for 1 minute at T_A = 25°C, RH = 60% between input and output.
1-2 shorted together, 3-4 shorted together.

ELECTRICAL CHARACTERISTICS (T_A = 25°C)

	Parameter		Symbol	Conditions	MIN.	TYP.	MAX.	Unit
	Diode	Forward Voltage	V_F	I_F = 10 mA		1.2	1.4	V
		Reverse Current	I_R	V_R = 5 V			5	μA
		Terminal Capacitance	C_t	V = 0 V, f = 1.0 MHz		10		pF
	Transistor	Collector to Emitter Dark Current	I_{CEO}	V_{CE} = 70 V, I_F = 0 mA			100	nA
★	Coupled	Current Transfer Ratio (I_C/I_F)*1	CTR	I_F = 5 mA, V_{CE} = 5 V	50		400	%
		Collector Saturation Voltage	$V_{CE\ (sat)}$	I_F = 10 mA, I_C = 2 mA		0.13	0.3	V
		Isolation Resistance	R_{I-O}	V_{I-O} = 1.0 kV_{DC}	10^{11}			Ω
		Isolation Capacitance	C_{I-O}	V = 0 V, f = 1.0 MHz		0.4		pF
★		Rise Time*2	t_r	V_{CC} = 10 V, I_C = 2 mA, R_L = 100 Ω		3		μs
★		Fall Time*2	t_f			5		

★ ***1** CTR rank

N : 50 to 400 (%)
H : 80 to 160 (%)
W : 130 to 260 (%)
Q : 100 to 200 (%)
L : 200 to 400 (%)

***2** Test circuit for switching time

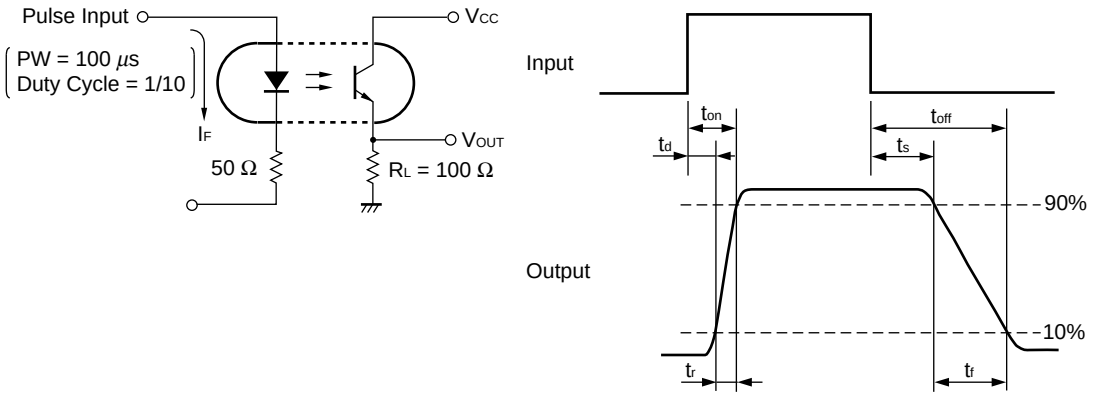

TYPICAL CHARACTERISTICS (T_A = 25°C, unless otherwise specified)

DIODE POWER DISSIPATION vs. AMBIENT TEMPERATURE

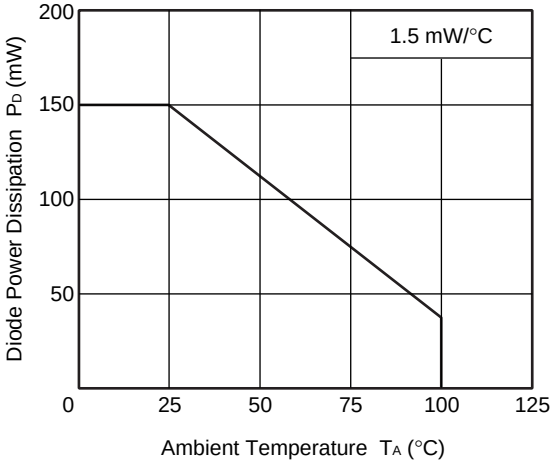

TRANSISTOR POWER DISSIPATION vs. AMBIENT TEMPERATURE

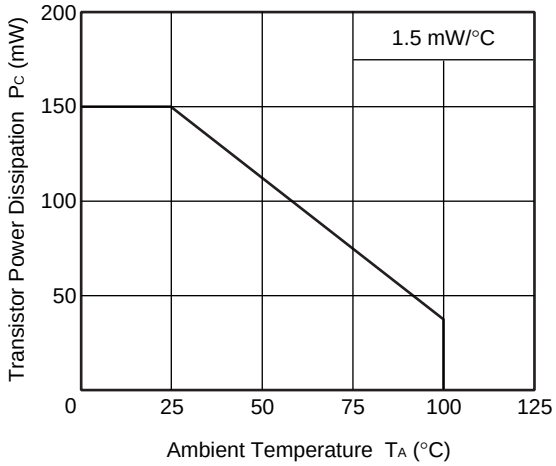

FORWARD CURRENT vs. FORWARD VOLTAGE

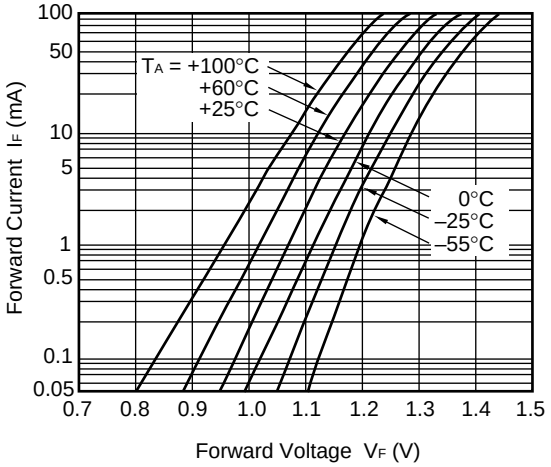

COLLECTOR CURRENT vs. COLLECTOR TO EMITTER VOLTAGE

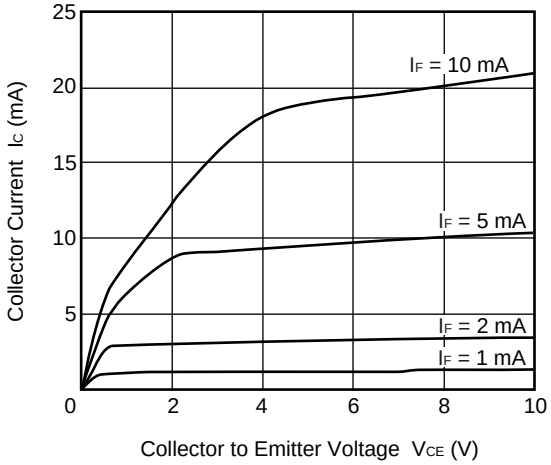

COLLECTOR TO EMITTER DARK CURRENT vs. AMBIENT TEMPERATURE

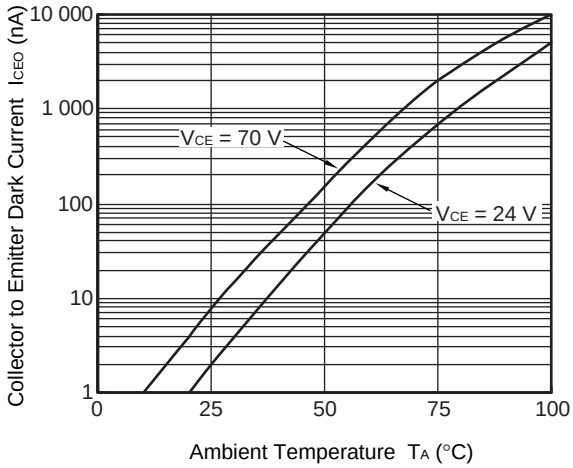

COLLECTOR CURRENT vs. COLLECTOR SATURATION VOLTAGE

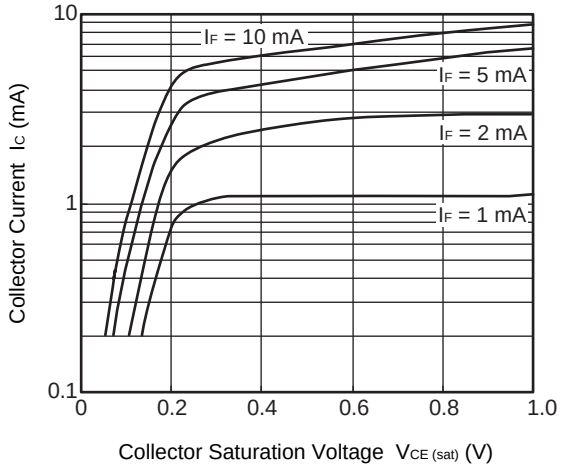

Remark The graphs indicate nominal characteristics.

NORMALIZED CURRENT TRANSFER RATIO vs. AMBIENT TEMPERATURE

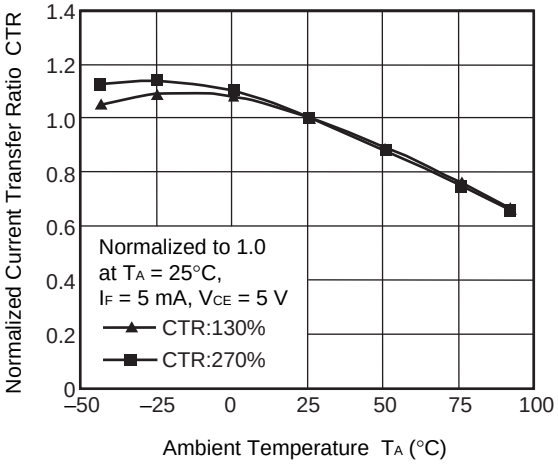

CURRENT TRANSFER RATIO vs. FORWARD CURRENT

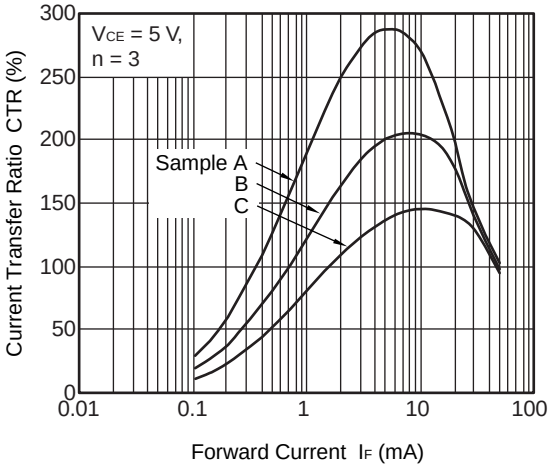

SWITCHING TIME vs. LOAD RESISTANCE

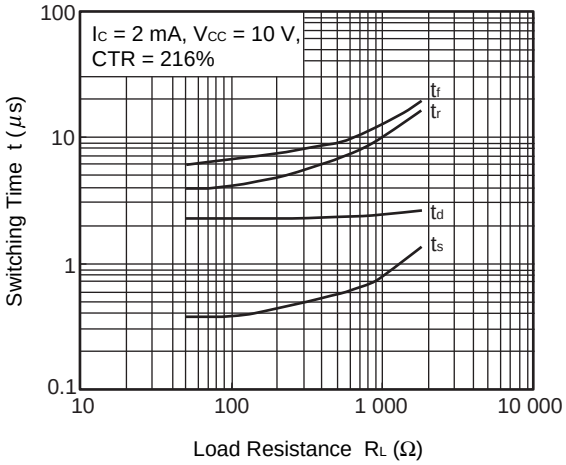

SWITCHING TIME vs. LOAD RESISTANCE

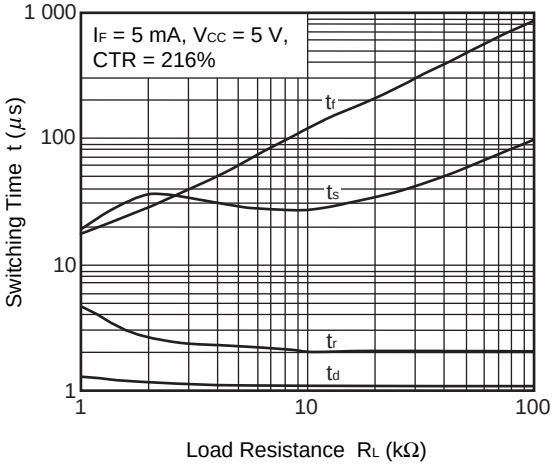

FREQUENCY RESPONSE

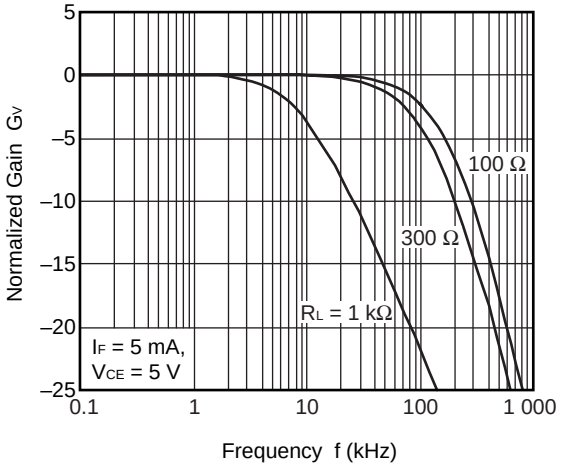

LONG TERM CTR DEGRADATION

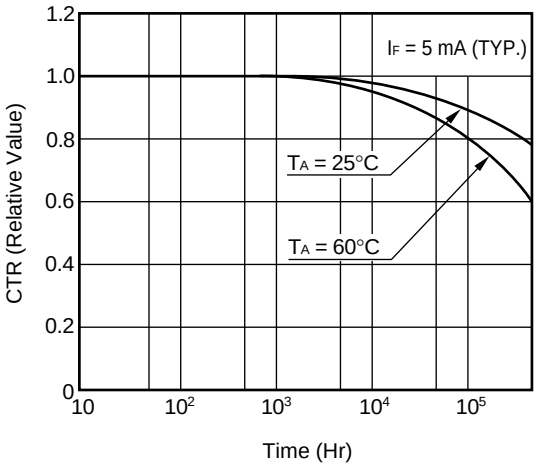

Remark The graphs indicate nominal characteristics.

★ **TAPING SPECIFICATIONS (UNIT : mm)**

Outline and Dimensions (Tape)

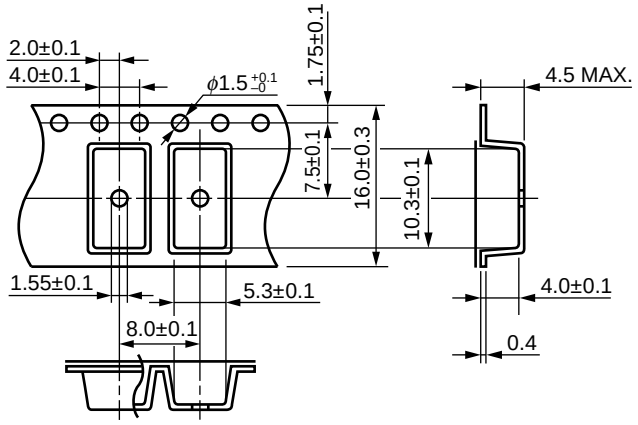

Tape Direction

PS2501AL-1-F3

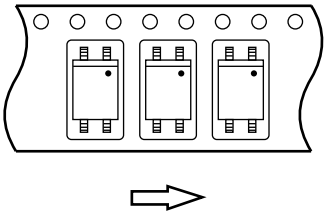

Outline and Dimensions (Reel)

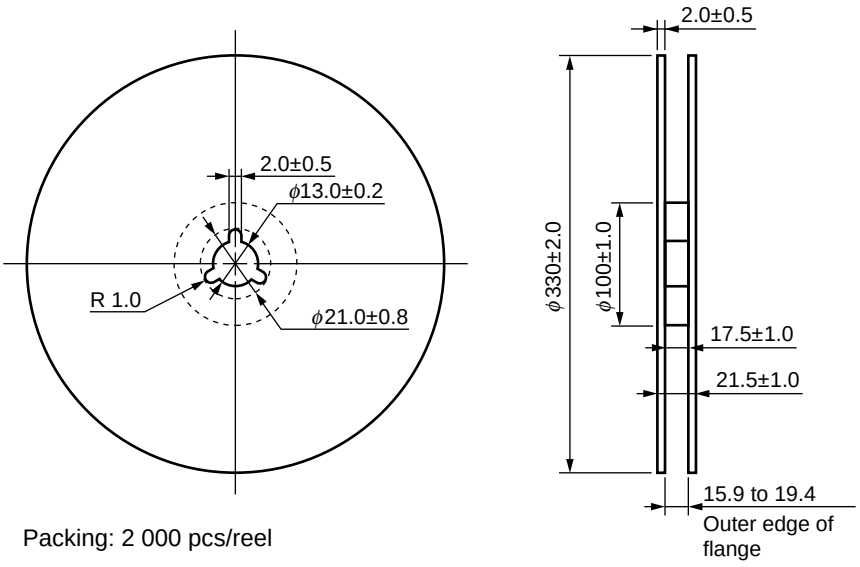

Packing: 2 000 pcs/reel

NOTES ON HANDLING

1. Recommended soldering conditions

(1) Infrared reflow soldering

• Peak reflow temperature	260°C or below (package surface temperature)
• Time of peak reflow temperature	10 seconds or less
• Time of temperature higher than 220°C	60 seconds or less
• Time to preheat temperature from 120 to 180°C	120±30 s
• Number of reflows	Three
• Flux	Rosin flux containing small amount of chlorine (The flux with a maximum chlorine content of 0.2 Wt% is recommended.)

Recommended Temperature Profile of Infrared Reflow

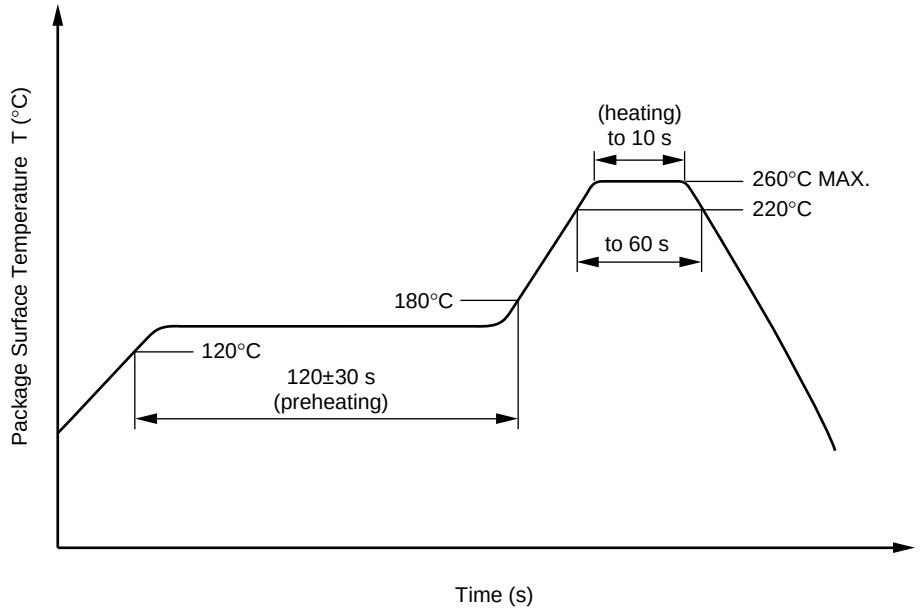

(2) Wave soldering

• Temperature	260°C or below (molten solder temperature)
• Time	10 seconds or less
• Preheating conditions	120°C or below (package surface temperature)
• Number of times	One (Allowed to be dipped in solder including plastic mold portion.)
• Flux	Rosin flux containing small amount of chlorine (The flux with a maximum chlorine content of 0.2 Wt% is recommended.)

(3) Soldering by soldering iron

• Peak temperature (lead part temperature)	350°C or below
• Time (each pins)	3 seconds or less
• Flux	Rosin flux containing small amount of chlorine (The flux with a maximum chlorine content of 0.2 Wt% is recommended.)

(a) Soldering of leads should be made at the point 1.5 to 2.0 mm from the root of the lead.

(b) Please be sure that the temperature of the package would not be heated over 100°C.

(4) Cautions

• Fluxes

Avoid removing the residual flux with freon-based and chlorine-based cleaning solvent.

2. Cautions regarding noise

Be aware that when voltage is applied suddenly between the photocoupler's input and output or between collector-emitters at startup, the output transistor may enter the on state, even if the voltage is within the absolute maximum ratings.

3. Measurement conditions of current transfer ratios (CTR), which differ according to photocoupler

Check the setting values before use, since the forward current conditions at CTR measurement differ according to product.

When using products other than at the specified forward current, the characteristics curves may differ from the standard curves due to CTR value variations or the like. This tendency may sometimes be obvious, especially below I_F = 1 mA.

Therefore, check the characteristics under the actual operating conditions and thoroughly take variations or the like into consideration before use.

USAGE CAUTIONS

1. Protect against static electricity when handling.
2. Avoid storage at a high temperature and high humidity.

- **The information in this document is current as of February, 2010. The information is subject to change without notice. For actual design-in, refer to the latest publications of NEC Electronics data sheets, etc., for the most up-to-date specifications of NEC Electronics products. Not all products and/or types are available in every country. Please check with an NEC Electronics sales representative for availability and additional information.**
- No part of this document may be copied or reproduced in any form or by any means without the prior written consent of NEC Electronics. NEC Electronics assumes no responsibility for any errors that may appear in this document.
- NEC Electronics does not assume any liability for infringement of patents, copyrights or other intellectual property rights of third parties by or arising from the use of NEC Electronics products listed in this document or any other liability arising from the use of such products. No license, express, implied or otherwise, is granted under any patents, copyrights or other intellectual property rights of NEC Electronics or others.
- Descriptions of circuits, software and other related information in this document are provided for illustrative purposes in semiconductor product operation and application examples. The incorporation of these circuits, software and information in the design of a customer's equipment shall be done under the full responsibility of the customer. NEC Electronics assumes no responsibility for any losses incurred by customers or third parties arising from the use of these circuits, software and information.
- While NEC Electronics endeavors to enhance the quality and safety of NEC Electronics products, customers agree and acknowledge that the possibility of defects thereof cannot be eliminated entirely. In addition, NEC Electronics products are not taken measures to prevent radioactive rays in the product design. When customers use NEC Electronics products with their products, customers shall, on their own responsibility, incorporate sufficient safety measures such as redundancy, fire-containment and anti-failure features to their products in order to avoid risks of the damages to property (including public or social property) or injury (including death) to persons, as the result of defects of NEC Electronics products.
- NEC Electronics products are classified into the following three quality grades: "Standard", "Special" and "Specific".
  The "Specific" quality grade applies only to NEC Electronics products developed based on a customer-designated "quality assurance program" for a specific application. The recommended applications of an NEC Electronics product depend on its quality grade, as indicated below. Customers must check the quality grade of each NEC Electronics product before using it in a particular application.
  "Standard": Computers, office equipment, communications equipment, test and measurement equipment, audio and visual equipment, home electronic appliances, machine tools, personal electronic equipment and industrial robots.
  "Special": Transportation equipment (automobiles, trains, ships, etc.), traffic control systems, anti-disaster systems, anti-crime systems, safety equipment and medical equipment (not specifically designed for life support).
  "Specific": Aircraft, aerospace equipment, submersible repeaters, nuclear reactor control systems, life support systems and medical equipment for life support, etc.

The quality grade of NEC Electronics products is "Standard" unless otherwise expressly specified in NEC Electronics data sheets or data books, etc. If customers wish to use NEC Electronics products in applications not intended by NEC Electronics, they must contact an NEC Electronics sales representative in advance to determine NEC Electronics' willingness to support a given application.

(Note)
(1) "NEC Electronics" as used in this statement means NEC Electronics Corporation and also includes its majority-owned subsidiaries.
(2) "NEC Electronics products" means any product developed or manufactured by or for NEC Electronics (as defined above).

M8E0904E

Caution GaAs Products	This product uses gallium arsenide (GaAs). GaAs vapor and powder are hazardous to human health if inhaled or ingested, so please observe the following points. • Follow related laws and ordinances when disposing of the product. If there are no applicable laws and/or ordinances, dispose of the product as recommended below. 1. Commission a disposal company able to (with a license to) collect, transport and dispose of materials that contain arsenic and other such industrial waste materials. 2. Exclude the product from general industrial waste and household garbage, and ensure that the product is controlled (as industrial waste subject to special control) up until final disposal. • Do not burn, destroy, cut, crush, or chemically dissolve the product. • Do not lick the product or in any way allow it to enter the mouth.