Wall Industries, Inc.

PS1K5 Series
1500 Watt Single Output PFC and Current Sharing AC/DC Switching Power Supply

FEATURES



- **Remote Sense**
- **Power Failure Signal**
- **Remote ON/OFF Control**
- **0.98 Typical Power Factor**
- **Programmable Output Voltage**
- **Forced Current Sharing at Parallel Operation**
- **Input Voltage: 90~260VAC (90 ~ 170VAC Reduced Power)**
- **Short Circuit/ Over Load/ Over Voltage/ Over Temperature Protection**

SPECIFICATIONS: *PS1K5 Series*	
All specifications are based on 25°C, Nominal Input Voltage, and Maximum Output Current unless otherwise noted. We reserve the right to change specifications based on technological advances.	
INPUT SPECIFICATIONS	
Input Voltage Range	90 ~ 260VAC **(90 ~ 170 VAC reduced power - see "Output Power vs Input Voltage" derating curve)**
Input Frequency	47 to 63Hz
Input Current	9.0A at 230VAC (Typical)
Inrush Current	Cold Start < 60A (Typical)
Leakage Current	< 7.0mA at 240VAC
Remote ON/OFF Control	Compatible with a TTL signal to turn ON/OFF
OUTPUT SPECIFICATIONS	
Output Voltage	See Table
Output Power Range	1500 Watts max.
Output Voltage Adjustability	Maximum - minimum > 15% Adjustment (Typical adjustment by potentiometer) 25% ~ 100% Adjustment by 1 ~ 5VDC external control.
Line Regulation	Less than 1%
Load Regulation	Less than 1%
Output Current	See Table
Ripple & Noise (peak to peak)	Less than 1% or 150mV
Setup, Rise, Hold-Up Time	500ms, 50ms, 12ms
Temperature Coefficient	±0.04% / °C (0 ~ 50°C)
Remote Sense	Yes
PROTECTION	
Over Voltage Protection	110% ~ 135% (variable "OVP" follows the adjustable DC output voltage)
Over Load Protection	Current limiting 3 times (1.5", 3.0", 5.0") then intelligent auto recovery before shutdown.
GENERAL SPECIFICATIONS	
Efficiency	See Table
Power Factor	0.98 (Typical)
Power Failure Signal	Open Collector of NPN Transistor
Parallel Operation	Yes
ENVIRONMENTAL SPECIFICATIONS	
Working Temperature	0°C to +50°C @ 100% Load, +65°C @ 50% Load.
Storage Temperature	-20°C to +85°C
Working Humidity	20% to 90% RH
Storage Humidity	10% to 95% RH
Vibration	10 ~ 200Hz, 2g 10 min./1cycle, Period of 60 min. for each axis.
Cooling	Power rating and temperature controlled fan.
PHYSICAL SPECIFICATIONS	
Weight	4.5kg
Dimensions	290(L) x 120(W) x 132.5(H) mm
SAFETY & EMC	
Safety Standards	UL1950, TUV EN60950
EMC Standards	EN55022, EN610000-4-2,3,4,5,6,8,11, EN61000-3-2,3, ENV50204

Wall Industries, Inc. 5 Watson Brook Road Exeter, NH 03833
603-778-2300 www.wallindustries.com Fax 603-778-9797

OUTPUT VOLTAGE / CURRENT RATING CHART

Model Number	Output Voltage	Output Current	Maximum Output Power	Ripple & Noise	Efficiency
PS1K5S-P009	9 VDC	166.6A	1500W	150mV	83%
PS1K5S-P012	12 VDC	125A	1500W	150mV	84%
PS1K5S-P015	15 VDC	100A	1500W	150mV	85%
PS1K5S-P018	18 VDC	83.3A	1500W	150mV	85%
PS1K5S-P024	24 VDC	62.5A	1500W	150mV	88%
PS1K5S-P036	36 VDC	41.6A	1500W	150mV	88%
PS1K5S-P048	48 VDC	31.25A	1500W	150mV	89%
PS1K5S-P060	60 VDC	25A	1500W	150mV	90%

NOTES

1. Input voltage is 90 ~ 260VAC however, the unit does not reach full power until >170VAC. See derating curve below.
2. Dimensions of the mechanical drawing are shown in millimeters and inches.
3. Weight of the unit is 4500 grams.

DERATING CURVES

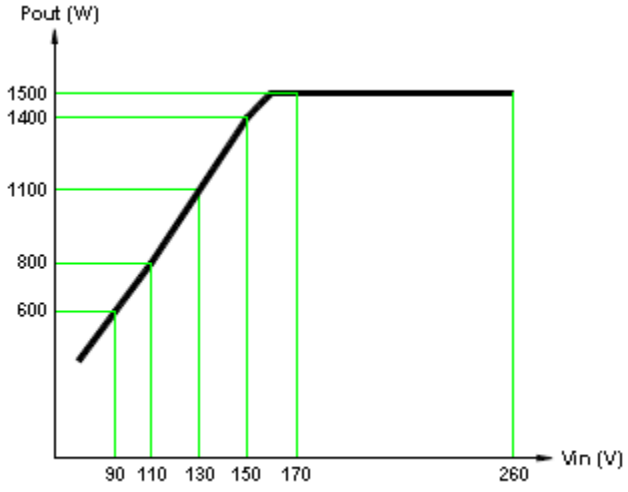

Output Power vs Input Voltage Derating Curve

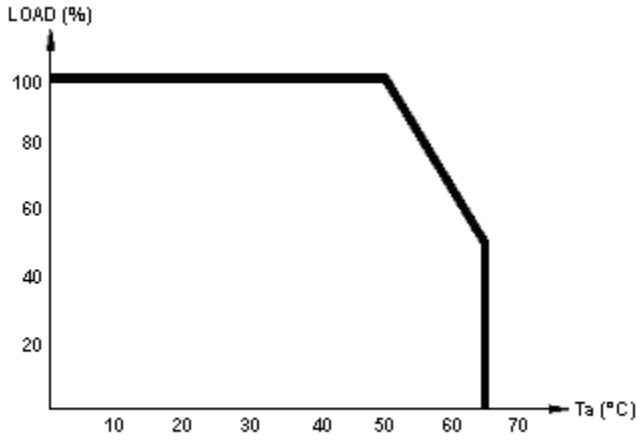

Output Power vs Ambient Temperature Derating Curve

CONNECTOR PIN-OUT DRAWINGS

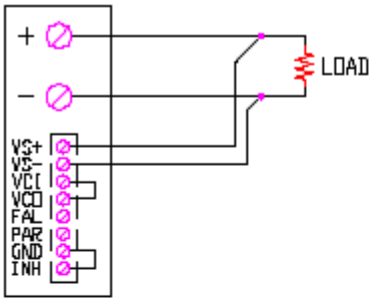

REMOTE SENSING

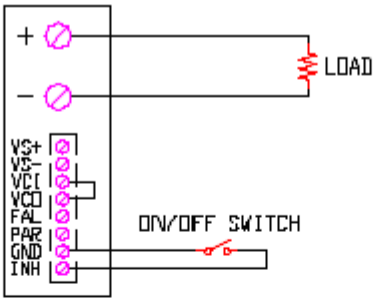

ON/OFF CONTROL BY SWITCH

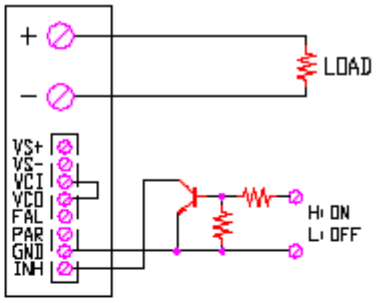

ON/OFF CONTROL BY TRANSISTOR

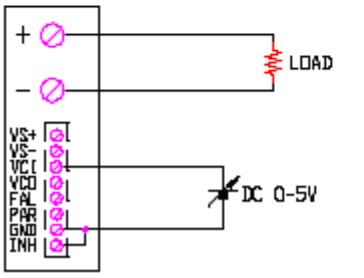

OUTPUT VOLTAGE ADJUST WITH DC 0-5V

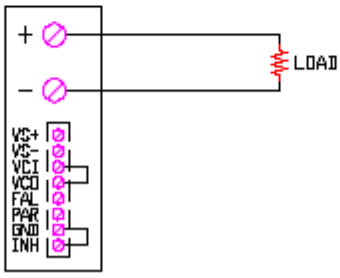

USING INTERNAL VOLTAGE CONTROL

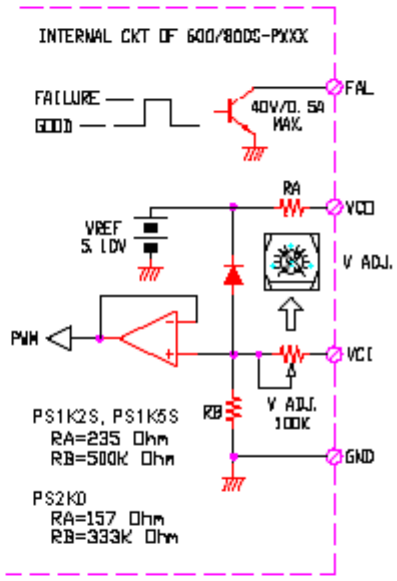

VCI AND VCO SIGNAL

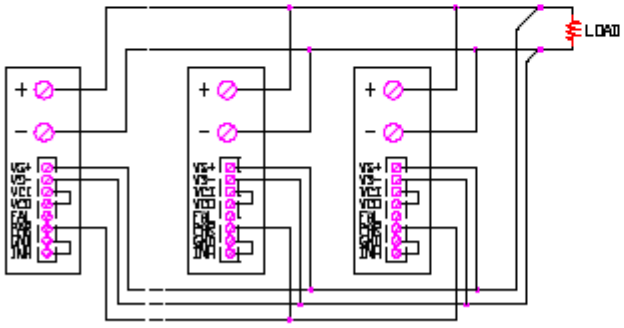

PARALLEL OPERATION WITH REMOTE SENSING

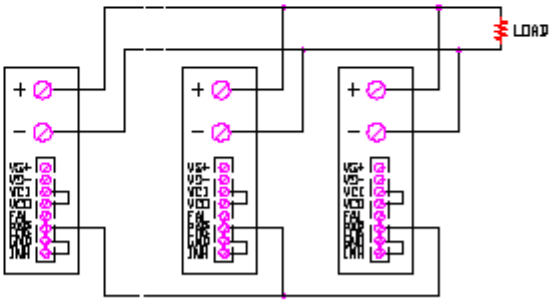

PARALLEL OPERATION WITHOUT REMOTE SENSING

MECHANICAL DRAWING

