LED-CONVERTER UNIT

PS-LD0301-031(S) (PRELIMINARY INFORMATION)

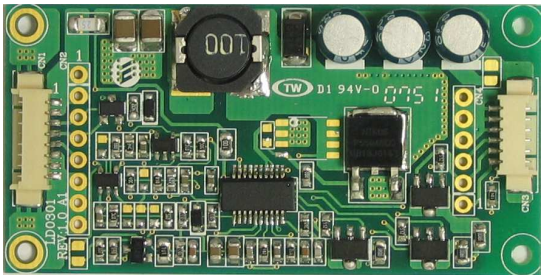

DESCRIPTION :
This low profile LED-Converter is developed for max. 3 LED-lines
Optimized for **AUO: G150XG01 V.2 19.Nov. 08**

APPLICABLE:

1~3 LED lines (Serial Mode)	
Pout	max. 7W
LED Voltage	max. 30Vdc
Lamp Current	max. 80mAdc

FEATURES :

Internal Open LED Detection for every Line
Voltage or ext. PWM Dimming
1000:1 dimming ratio with external PWM
Remote ON / OFF
Wide Input Voltage Range
RoHS compliant (S)

TEMPERATURE & HUMIDITY :

Operating Temperature Range	-10°C ~ +65°C
Storage Temperature Range	-20°C ~ +85°C
Humidity	95 %RH max

DIMENSIONS : **L x W x H** **64 x 32 x 6.5 mm**

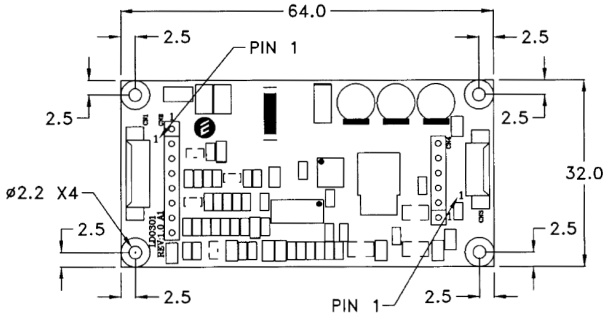

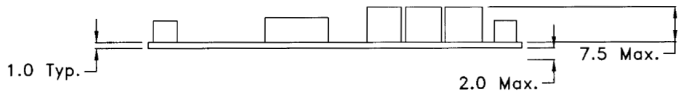

Weight :8 (g) typ.

Components

No.	Part Description	Qty.	Material	Note
1	PCB	1	UL94V-0 (FR-4 or CEM-3)	t=1.0mm
2	Connector CN1	1	53261-0890 / PBD	Molex
3	Connector CN3	1	53261-0690 / PBD	Molex

Web: www.Power-Systems.de
Email: Info@Power-Systems.de
Address: Hauptstr. 48 ; 74360 Ilsfeld-Auenstein / Germany
Tel. : + 49 / 70 62 / 67 59 - 6
Fax: + 49 / 70 62 / 67 59 - 800
All specifications are subject to change without notice.

LED-CONVERTER UNIT

PS-LD0301-031(S)

(PRELIMINARY INFORMATION)

Input side CN1:

Pin No.	Symbols	Ratings
CN 1-1	Vin	4.75 ~ 13.2 Vdc
CN 1-2	Vin	4.75 ~ 13.2 Vdc
CN 1-3	Vrmt	0 ~ 1.5 = OFF / 2.5 ~ Vin = ON
CN 1-4	Ext. PWM	0 ~ 0.5 = LOW / 2.5 ~ 5 = HIGH
CN 1-5	Vbr	0.0 ~ 5.0 (5V=low brightness)
CN 1-6	GND	-
CN 1-7	GND	-
CN 1-8	GND	-

Output side CN3:

Pin No.	Symbols	Ratings
CN 3-1	RTN1(-)	LED LINE 1 RETURN
CN 3-2	RTN2(-)	LED LINE 2 RETURN
CN 3-3	RTN3(-)	LED LINE 3 RETURN
CN 3-4	Vhigh(+)	30Vdc (80mArms)
CN 3-5	Vhigh(+)	30Vdc (80mArms)
CN 3-6	Vhigh(+)	30Vdc (80mArms)

ELECTRICAL CHARACTERISTICS :

Parameters	Symbols	Conditions			Specification			Unit	Note
		Vin (V)	Vbr (V)	Tu (℃)	Min.	Typ.	Max.		
Output Current	Iout	4.75 ~ 13.2	0	-10~+65	TBD	80	TBD	mAdc	Duty 100% max current
Output Current	Imin	4.75 ~ 13.2	5	-10~+65	-	10	-	%	duty cycle
Input Current	Iin	4.75 ~ 13.2	0	-10~+65	TBD	1.0	TBD	Adc	*By 12Vdc
Open Load Shutdown	Vbias	4.75 ~ 13.2	0	-10~+65	-	28	-	Vdc	
PWM Frequency	f(PWM)	4.75 ~ 13.2	0	-10~+65	150	-	300	Hz	
Output Power	Pout	4.75 ~ 13.2	0	-10~+65	TBD	TBD	TBD	Watt	Tu: -20~+50degC
Output Power	Pout	4.75 ~ 13.2	0	-10~+65	TBD	TBD	TBD	Watt	Tu: -20~+70degC
Output Power	Pout	4.75 ~ 13.2	0	-10~+65	TBD	TBD	TBD	Watt	For one line
Output Power	Pout	4.75 ~ 13.2	0	-10~+65	TBD	TBD	TBD	Watt	For one line

Note 1 : Do not use analog dimming function and external PWM for dimming at the same time.
Note 2 : Pin terminal style converters have Molex connectors mounted.
Note 3 : External PWM-signal is Low active.

TEST CIRCUIT :

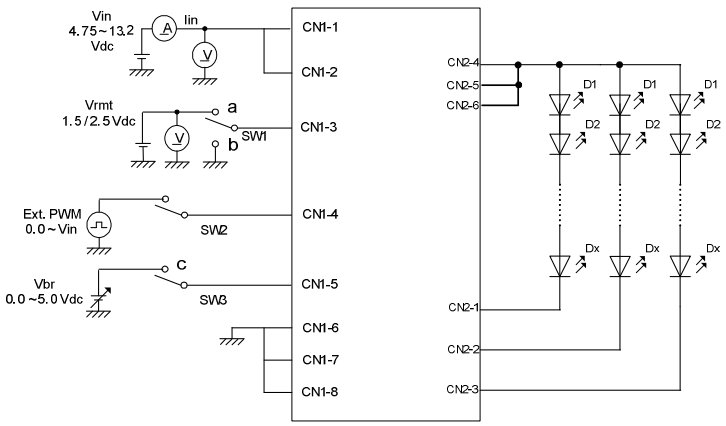

Connect Vbr to Ground while using ext. PWM dimming.

CABLES :

For input: 500 mm, stripped and tinned ends, order key < input cable # 13>
For output: <Adapter cable 3> with 300mm length or <Adapter cable 6> with 90mm length

Power Systems – The Power Solution
Web: www.Power-Systems.de
Email: Info@Power-Systems.de
Address: Hauptstr. 48 ; 74360 Ilsfeld-Auenstein / Germany
Tel. : + 49 / 70 62 / 67 59 - 6
Fax: + 49 / 70 62 / 67 59 - 800