Plug-in Signal Conditioners M-UNIT

PULSE ISOLATOR

(built-in excitation)

Functions & Features

- Galvanically isolating pulse rate signals
- Input frequency = output frequency
- Various outputs (relay, open collector and voltage pulses)
- Excitation
- Isolation up to 2000 V AC
- High-density mounting

Typical Applications

- Isolating field pulse signals in order to reduce noises
- Changing e.g. dry contact signal to e.g. 5 V signals

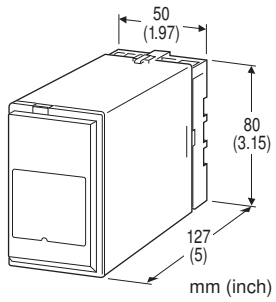

Factory setting

■ PULSE INPUT SETTING

•Dry Contact

Input	Semiconductor contact
Filter	W/O (without)
Threshold 0 – 15 V	2 V
Hysteresis 0 – 5 V	0.5 V

•Voltage pulse

Input waveform	Square
Input coupling	DC
Input amplitude	0.5 – 50 Vp-p
Offset	≤ 50 V
Filter	W/O (without)
Threshold 0 – 15 V	1/2 amplitude
Hysteresis 0 – 5 V	0.5 V

•5 V voltage pulse

Filter	W/O (without)

•12 V, 24 V voltage pulse

Filter	W/O (without)

•2- wire current pulse

ON current (H) 0 – 25 mA	14.5 mA
OFF current (L) 0 – 25 mA	9.5 mA
Filter	W/O (without)

■ SETTINGS FOR PULSE OUTPUT

Output pulse width	50 ms

MODEL: PPD-[1][2][3][4][5]-[6][7]

ORDERING INFORMATION

- Code number: PPD-[1][2][3][4][5]-[6][7]

Specify a code from below for each of [1] through [7].
(e.g. PPD-D4A3N-K/Q)

- Frequency range (e.g. 0 – 10 kHz)
- Output pulse width (e.g. 75 msec.)

Use Ordering Information
Sheet (No. ESU-1370). Default setting (table below) will be used if not otherwise specified.

- Specify the specification for option code /Q
(e.g. /C01/S01)

[1] INPUT

A: Dry contact
B: Voltage pulse (Specify sensitivity)
C: 5 V pulse (sensitivity 2 V)
D: 12 V/24 V pulse (sensitivity 5 V)
H: Two-wire current pulse

[2] EXCITATION

1: 5 V DC @ 120 mA
4: 12 V DC @ 60 mA
7: 24 V DC @ 25 mA

[3] OUTPUT

A: Open collector (max. 100 kHz)
M: 5 V pulse (max. 100 kHz)
N: 12 V pulse (max. 100 kHz)
P: 24 V pulse (max. frequency 50 kHz)
H: High power photo MOSFET relay (max. 20 Hz)
( ) = Max. frequency

[4] OUTPUT PULSE WIDTH

1: Equal to the input
3: One-shot output (std. pulse width 50 msec.)
(Specify when optional pulse width is required.)

[5] OUTPUT LOGIC

N: The same as the input
R: Inverted

[6] POWER INPUT

AC Power
K: 85 – 132 V AC
(Operational voltage range 85 – 132 V, 47 – 66 Hz)
DC Power
S: 12 V DC
(Operational voltage range 12 V ±10 %, ripple 10 %p-p max.)
R: 24 V DC
(Operational voltage range 24 V ±10 %, ripple 10 %p-p max.)
V: 48 V DC
(Operational voltage range 48 V ± 10 % , ripple 10 % p-p max.)
P: 110 V DC
(Operational voltage range 85 – 150 V, ripple 10 %p-p max.)

[7] OPTIONS

blank: none
/Q: With options (specify the specification)

SPECIFICATIONS OF OPTION: Q (multiple selections)
COATING (For the detail, refer to M-System's web site.)
/C01: Silicone coating
/C02: Polyurethane coating
/C03: Rubber coating
TERMINAL SCREW MATERIAL
/S01: Stainless steel

GENERAL SPECIFICATIONS

Construction: Plug-in
Connection: M3.5 screw terminals
Screw terminal: Chromated steel (standard) or stainless steel
Housing material: Flame-resistant resin (black)
Isolation: Input or sensor exc. to output to power
DIP SW1 & SW2: Used for input spec. setting
Input monitor (PL1): Red LED blinks when pulse input
Input monitor (PL2): Not used
Excitation adjustment: 5 – 24 V DC
Input pulse sensing: DC coupled standard or AC coupled
Input filter: None, 10 ms (for chattering), 0.1 ms (for noise), selectable with DIP switch

INPUT SPECIFICATIONS

Excitation: Shortcircuit protection; approx. 440 mA at shortcircuit
Pulse width time requirement: ≥ 5 µsec.
The detecting levels shown below are default value. Refer to the manual for adjustment.

■ **Dry Contact**
Max. frequency: 100 kHz
Detecting Conditions
Exc. code: 1
Sensing: 5 V DC / 0.5 mA
Detecting level:
OFF: ≥ 2.25 V / ≥ 8.2 kΩ
ON: ≤ 1.75 V / ≤ 5.3 kΩ
Exc. code: 4
Sensing: 12 V DC / 1.2 mA
Detecting level:
OFF: ≥ 2.25 V / ≥ 2.3 kΩ
ON: ≤ 1.75 V / ≤ 1.7 kΩ
Exc. code: 7
Sensing: 16 V DC / 2.4 mA
Detecting level:
OFF: ≥ 2.25 V / ≥ 1 kΩ
ON: ≤ 1.75 V / ≤ 0.8 kΩ
Sensing voltage means the excitation supply to the sensor and the current value indicates that at shortcircuit.
Detecting level means the threshold used to determine ON or OFF status of the pulses and the resistance values indicated that of the sensor.

■ **Voltage Pulse**
Maximum frequency: 100 kHz
• **Customised pulse**: Specify DC offset and amplitude.
Waveform: Square or sine
Input impedance: ≥ 10 kΩ
Input amplitude: 0.5 – 50 Vp-p
Max. voltage between input terminals: 50 V
• **5 V, 12 V, 24 V Pulse**
Waveform: Square or sine
Input impedance: ≥ 10 kΩ
Detecting level
5 V Pulse: $V_H \geq 2.25$ V, $V_L \leq 1.75$ V
12 V / 24 V Pulse: $V_H \geq 5.25$ V, $V_L \leq 4.75$ V
($V_H - V_L \geq 500$ mV)

■ **Two-wire Current Pulse**
Max. frequency: 100 kHz
Input resistance: receiving resistor 100 Ω
Input range: 0 – 25 mA
Hi/Lo level: ≤ 9.5 mA for Lo, ≥ 14.5 mA for Hi

■ **Voltage pulse waveform**

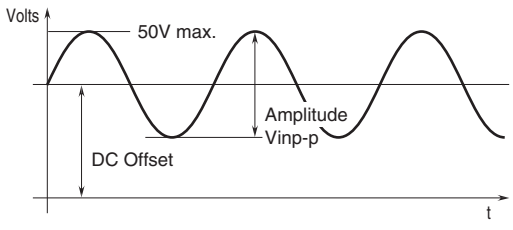

■Voltage pulse (example)

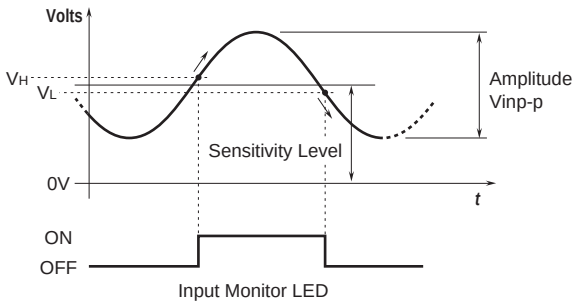

OUTPUT SPECIFICATIONS

■ High Power Photo MOSFET Relay
Maximum frequency: 20 Hz
• **Rise time**: 5 msec.
• **Sink time**: 3 msec.
Rating: 120 V AC or 120 V DC @ 200 mA (resistive load)
On resistance: 3 Ω
■ Open Collector
Maximum frequency: 100 kHz
50 V DC @ 50 mA (resistive load)
Saturation voltage: 0.5 V DC
■ **Voltage Pulse**: Rating (5, 12 or 24 V) ±10 %
Maximum frequency: 100 kHz (50 kHz for 24 V)
Load resistance: ≥ 1.2 kΩ
Low level: ≤ 0.5 V

OUTPUT PULSE WIDTH

■ **Equal to the input**: Output waveforms have the same period and duty ratio as those of input waveforms (when DC coupled).
■ One-shot Output
The PPD detects a pulse sink and outputs [input pulse width ±20 %]; 50 msec. standard
Note: 2 types of one-shot detection are available: pulse rise or sink. Refer to the table on the "Output Logic" section and specify when ordering.
Optional pulse width: 30 µsec. – 300 msec.

INSTALLATION

Power consumption
•**AC**: Approx. 6 VA
•**DC**: Approx. 6 W (230 mA at 24 V)
Operating temperature: -5 to +60°C (23 to 140°F)
Operating humidity: 30 to 90 %RH (non-condensing)
Mounting: Surface or DIN rail
Weight: 200 g (0.44 lb)

PERFORMANCE

Response time
Open collector or voltage pulse: the output is delayed at both pulse rise and fall by 3 µsec. each. The delay could be much longer for certain types of load for open collector.
High power photo MOSFET relay: the output is delayed by 10 msec. at the rise, by 3 msec. at the fall.
Insulation resistance: ≥ 100 MΩ with 500 V DC
Dielectric strength: 2000 V AC @1 minute (input to output to power to ground)

EXTERNAL VIEW

Note: This unit is factory calibrated according to the Ordering Information. If you need to change hardware setting, refer to the instruction manuals of the transmitter.

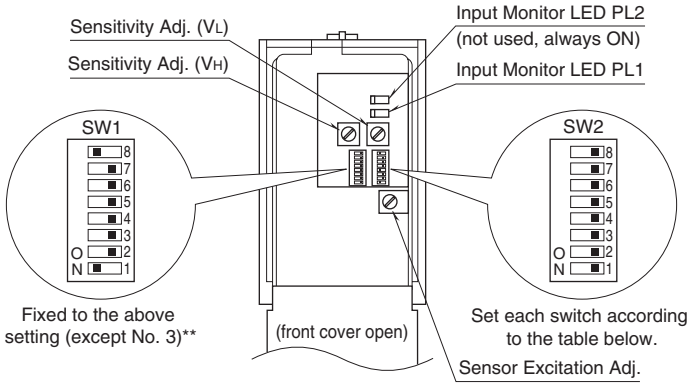

OUTPUT LOGIC

OUTPUT WAVEFORM \ INPUT WAVEFORM			VOLTAGE PULSE or 2-WIRE CURRENT PULSE (H / L)	DRY CONTACT (OFF / ON)
VOLTAGE PULSE	Non Inverted	No pulse width conversion	H / L	H / L
		One-shot, detecting input pulse rise	H / L	H / L
		One-shot, detecting input pulse drop	H / L	H / L
	Inverted	No pulse width conversion	H / L	H / L
		One-shot, detecting input pulse rise	H / L	H / L
		One-shot, detecting input pulse drop	H / L	H / L
OPEN COLLECTOR or POWER PHOTO MOSFET RELAY	Non Inverted	No pulse width conversion	OFF / ON	OFF / ON
		One-shot, detecting input pulse rise	OFF / ON	OFF / ON
		One-shot, detecting input pulse drop	OFF / ON	OFF / ON
	Inverted	No pulse width conversion	OFF / ON	OFF / ON
		One-shot, detecting input pulse rise	OFF / ON	OFF / ON
		One-shot, detecting input pulse drop	OFF / ON	OFF / ON

The pulse width in one-shot means the bold lined section of a pulse waveform.

EXTERNAL DIMENSIONS & TERMINAL ASSIGNMENTS unit: mm (inch)

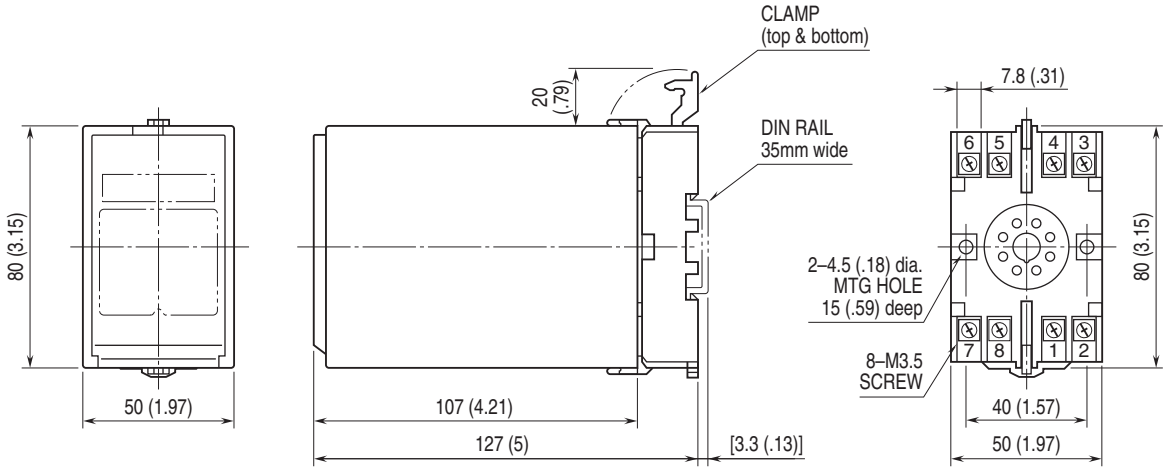

• When mounting, no extra space is needed between units.

SCHEMATIC CIRCUITRY & CONNECTION DIAGRAM

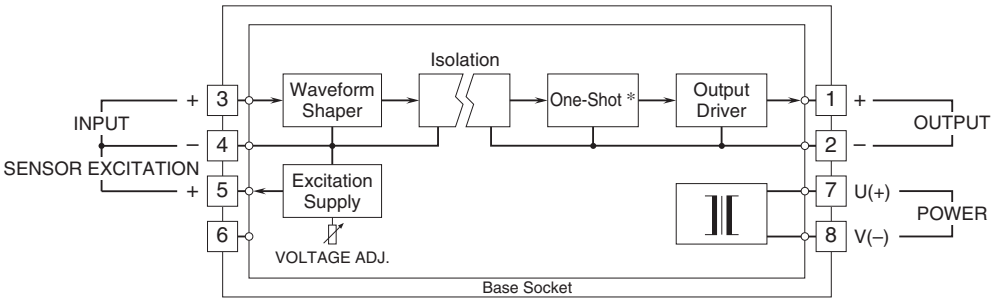

* Provided only when the one-shot output is specified.
Note: With 24V excitation and dry contact input, the voltage across the terminals 3 – 4, divided in the waveform shaper, is of approx. 16V.

Input Connection Examples

■ Dry Contact

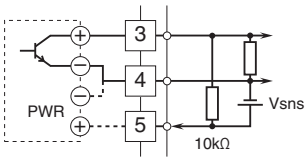

■ 2-Wire Current Pulse
• Built-in Excitation

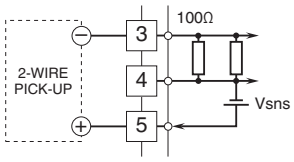

■ Voltage Pulse

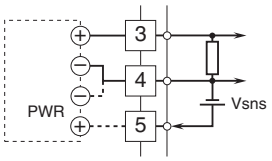

• External DC Supply

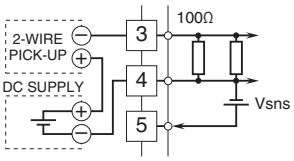

Output Connection Examples

■ Open Collector

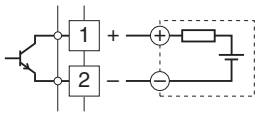

■ Voltage Pulse

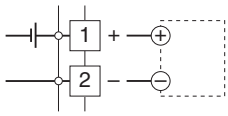

■ Power Photo MOSFET Relay
• AC Powered

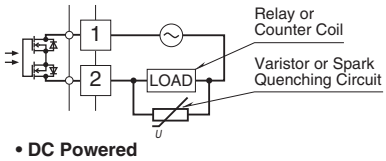

• DC Powered

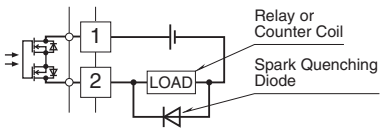

⚠ Specifications are subject to change without notice.