PPC-154T-EPCE

15" Panel PC Panel PC with Intel® Pentium® 4 Processor



Features

- 15" TFT XGA LCD
- Intel® Pentium® 4 CPU up to 3.06 GHz
- System memory up to 2 GB DDR SDRAM
- 10/100Base-T Ethernet (Gigabit optional)

Introduction

The PPC-154T is an Intel Pentium 4 based Panel PC with 15" color TFT LCD (resolution up to 1024 x 768). It features multimedia devices, various connectors, and can be installed in virtually any application. In addition, its user-friendly interface makes it a great host for information appliances.

Specifications

Processor System	CPU	Supports Socket 478 based Pentium 4 CPU up to 3.06 GHz			
	Disk Drive Housing	Room for 1 x 2.5" HDD			
	Dimensions (W x H x D)	420 x 323.3 x 130.5 mm (16.54" x 12.72" x 5.12")			
	Weight	6.5 kg (14.32 lbs)			
	Front Panel Protection	IP65/NEMA 4 compliant (not for SAW model)			
	Memory	Supports up to 2 GB DDR SDRAM (184-pin)			
	Network (LAN)	10/100Base-T Ethernet interface (Gigabit optional)			
	I/O Ports	- 2 x serial ports - 4 x USB 2.0 ports - 1 x PS/2 mouse and keyboard interface - Mic-in, Line-in, Line-out			
	Bus Expansion	1 x PCS Slot			
Environmental Specifications	Operating Temperature	0 ~ 45° C (32 ~ 113° F)			
	Relative Humidity	10 ~ 95% @ 40° C, non-condensing			
	Shock	10 G peak acceleration (11 msec. duration)			
	EMC	BSMI, VCCI, CE, FCC Class B, CCC			
	Safety	CB, CE, UL			
Power Supply	Output Rating	180 W (max.)			
	Input Voltage	100 ~ 240 V_{AC} @ 50 ~ 60 Hz			
	Output Voltage	+3.3 V @ 16.8 A, +5 V @ 12 A, +12 V @ 10 A, -12 V @ 0.8 A, +5 VSB @ 2 A			
LCD Display	Display Type	15" Color TFT LCD			
	Max. Resolution	1024 x 768			
	Max. Colors or Grayscales	262 K			
	Pixel Pitch (mm)	0.297 x 0.297			
	Luminance (cd/m²)	250			
	Contrast Ratio 400 : 1	500			
	Viewing Angle	70° (left), 65° (right), 75° (up), 75° (down)			
	Operating Temperature	0 ~ 50° C (32 ~ 122° F)			
	Lamp Life	60,000 hrs			
Touchscreen (Optional)	Types	Analog Resistive (Default)	Capacitive (Optional)	Surface Acoustic Wave (Optional)	Infrared (Optional)
	Resolution	Continuous	1024 x 1024	4096 x 4096	4096 x 4096
	Light Transmission	80%	91.5%	91%	91%
	Controller	USB Interface	USB Interface	USB Interface	USB Interface
	Power Consumption	+5 V @ 200 mA	+5 V @ 100 mA	+5 V @ 150 mA	+5 V @ 150 mA
	Software Driver	Supports both DOS and Windows			
	Durability (Touches)	35 million	225 million	50 million	100,000 hrs

Dimensions

Unit: mm (inches)

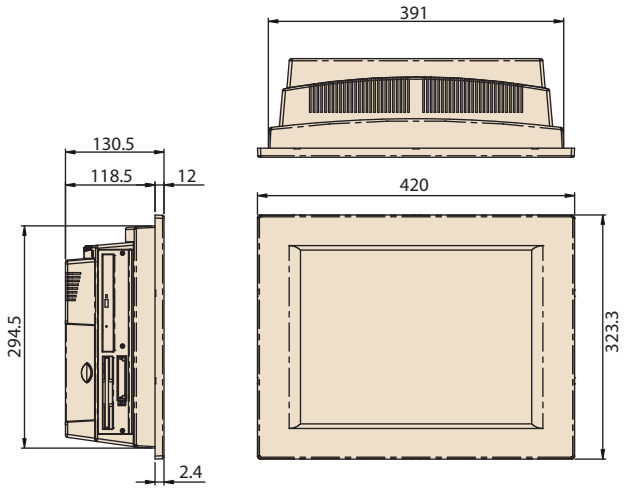

Fully Integrated I/O

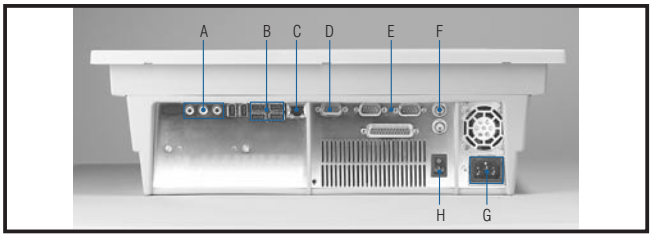

A: Line-in/Line-out/Mic-in
B: USB 2.0 x 4
C: 10/100Base-T Ethernet
D: VGA port
E: Com port x 2
F: PS/2 mouse & keyboard
G: AC inlet
H: Power Switch

Feature Details

Protection

To meet the requirements of a public environment, the front panel of PPC-154T complies with the IP65/NEMA 4 protection standards. Furthermore, the watchdog timer and power management features make the system secure and stable. The onboard hardware monitoring feature provides automatic protection that prevents the CPU from becoming overheated.

Networking

Two serial ports and a 10/100Base-T Ethernet port (Gigabit optional) give the PPC-154T advanced networking capabilities, and provide a great solution for versatile applications.

Easy Maintenance

Maintaining and replacing the LCD and touchscreen are made easier through the PPC-154T's modular design. In order to replace a defective LCD or touchscreen, one merely needs to remove the front cover and LCD bracket instead of disassembling the whole system.

Touchscreen Options

Customers can choose from three optional types of touchscreens: Resistive change to Infrared capacitive and SAW (Surface Acoustic Wave). These options make the PPC-154T a more user-friendly interface for different environments.