PN5018
P-CHANNEL JFET

Linear Systems replaces discontinued Siliconix PN5018

The PN5018 is a single P-Channel JFET switch

This p-channel analog switch is designed to provide low on-resistance and fast switching.

The TO-92 provides a low cost option and ease of manufacturing.

(See Packaging Information).

PN5018 Benefits:

- Low Insertion Loss
- No offset or error voltage generated by closed switch
- Purely resistive

PN5018 Applications:

- Analog Switches
- Commutators
- Choppers

FEATURES	
DIRECT REPLACEMENT FOR SILICONIX PN5018	
ZERO OFFSET VOLTAGE	
LOW ON RESISTANCE	$r_{DS(on)} \leq 75\Omega$
ABSOLUTE MAXIMUM RATINGS @ 25°C (unless otherwise noted)	
Maximum Temperatures	
Storage Temperature	-55°C to +200°C
Operating Junction Temperature	-55°C to +200°C
Maximum Power Dissipation	
Continuous Power Dissipation	500mW
MAXIMUM CURRENT	
Gate Current (Note 1)	I_G = -50mA
MAXIMUM VOLTAGES	
Gate to Drain Voltage	V_{GDS} = 30V
Gate to Source Voltage	V_{GSS} = 30V

PN5018 ELECTRICAL CHARACTERISTICS @ 25°C (unless otherwise noted)

SYMBOL	CHARACTERISTIC	MIN	TYP.	MAX	UNITS	CONDITIONS
BV_{GSS}	Gate to Source Breakdown Voltage	30	--	--	V	I_G = 1µA, V_{DS} = 0V
$V_{GS(off)}$	Gate to Source Cutoff Voltage	--	--	10		V_{DS} = -15V, I_D = -1µA
$V_{DS(on)}$	Drain to Source On Voltage	--	--	-0.5		V_{GS} = 0V, I_D = -6mA
I_{DSS}	Drain to Source Saturation Current (Note 2)	-10	--	--	mA	V_{DS} = -20V, V_{GS} = 0V
I_{GSS}	Gate Reverse Current	--	--	2	nA	V_{GS} = 15V, V_{DS} = 0V
$I_{D(off)}$	Drain Cutoff Current	--	--	-10		V_{DS} = -15V, V_{GS} = 12V
		--	--	-10	µA	V_{DS} = -15V, V_{GS} = 7V
I_{DGO}	Drain Reverse Current	--	--	-2	nA	V_{DG} = -15V, I_S = 0A
$r_{DS(on)}$	Drain to Source On Resistance	--	--	75	Ω	I_D = -1mA, V_{GS} = 0V

Click To Buy

PN5018 DYNAMIC ELECTRICAL CHARACTERISTICS @ 25°C (unless otherwise noted)

SYMBOL	CHARACTERISTIC	MIN	TYP.	MAX	UNITS	CONDITIONS
$r_{DS(on)}$	Drain to Source On Resistance	--	--	75	Ω	I_D = 0A, V_{GS} = 0V, f = 1kHz
C_{iss}	Input Capacitance	--	--	45	pF	V_{DS} = -15V, V_{GS} = 0V, f = 1MHz
C_{rss}	Reverse Transfer Capacitance	--	--	10		V_{DS} = 0V, V_{GS} = 12V, f = 1MHz

PN5018 SWITCHING CHARACTERISTICS @ 25°C (unless otherwise noted)

SYMBOL	CHARACTERISTIC		UNITS	CONDITIONS
$t_{d(on)}$	Turn On Time	15	ns	V_{GS}(L) = 12V V_{GS}(H) = 0V See Switching Circuit
t_r	Turn On Rise Time	20		
$t_{d(off)}$	Turn Off Time	15		
t_f	Turn Off Fall Time	50		

Note 1 - Absolute maximum ratings are limiting values above which PN5018 serviceability may be impaired.
Note 2 – Pulse test: PW≤ 300 µs, Duty Cycle ≤ 3%

PN5018 SWITCHING CIRCUIT PARAMETERS

V_{DD}	-6V
V_{GG}	12V
R_L	910Ω
R_G	220Ω
$I_{D(on)}$	-6mA

Available Packages:

PN5018 in TO-92
PN5018 in bare die.

Please contact Micross for full package and die dimensions

TO-92 (Bottom View)

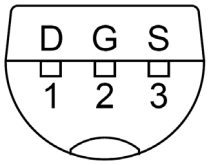

SWITCHING TEST CIRCUIT

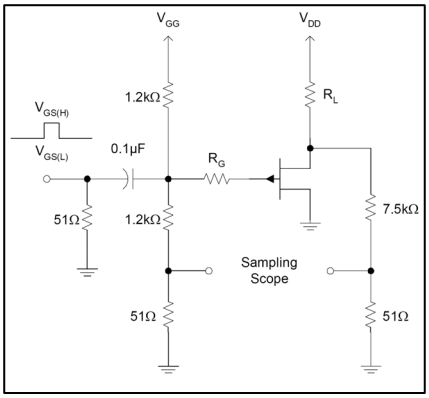

Micross Components Europe

Tel: +44 1603 788967
Email: chipcomponents@micross.com
Web: http://www.micross.com/distribution

Information furnished by Linear Integrated Systems and Micross Components is believed to be accurate and reliable. However, no responsibility is assumed for its use; nor for any infringement of patents or other rights of third parties which may result from its use. No license is granted by implication or otherwise under any patent or patent rights of Linear Integrated Systems.