PMT Panel Mount Power Supply

24V / 5V 100W Dual Output / PMT-D2V100W1A☐☐

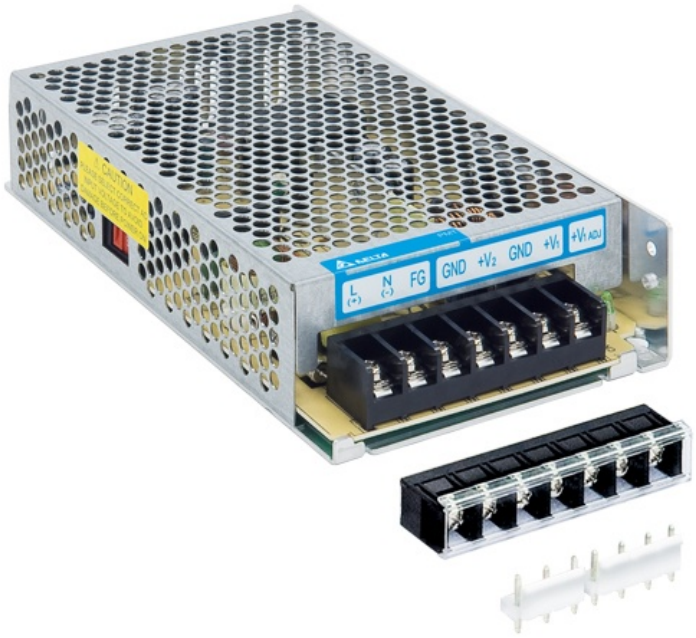

PMT

Highlights & Features

- Conforms to harmonic current IEC/EN 61000-3-2, Class A
- Selectable AC Switch (85-132Vac, 170-264Vac)
- High MTBF > 700,000 hrs. as per Telcordia SR-332
- Versatile configuration options (Enclosed, L Frame)
- Versatile connector options (Terminal Block, Front Face, Harness)

Safety Standards

CB Certified for worldwide use

Model Number: PMT-D2V100W1A☐☐
Unit Weight: 0.42 kg
Dimensions (L x W x D): 178 x 97 x 38 mm

General Description

The new PMT series of panel mount power supplies is the latest offering from one of the world's largest power supply manufacturers and solution providers - Delta. The product offers a wide operating temperature range from -10°C to +70°C and can withstand shock and vibration requirements (in accordance to IEC 60068-2-27 and IEC 60068-2-6 respectively). In addition to features like overvoltage and overload protections, Delta's PMT series of panel mount power supplies is unlike many other brands in the same price level. The PMT series is designed for cost competitive markets without compromising the quality of the components and product specifications. The series of products has an expected life time of 10 years. This versatile series has three different connector options (Terminal Block, Front Face and Harness) and can also be converted into L Frame (PML) type of power supplies to satisfy different application needs.

Model Information

PMT Panel Mount Power Supply

Model Number	Input Voltage Range	Output Voltage	Output Current
PMT-D2V100W1A☐☐	85-132Vac, 170-264Vac (Selectable by Switch)	V1: 24Vdc V2: 5Vdc	V1: 3.50A V2: 3.00A

Model Numbering

							CC Code
PM	**☐ –**	**D2V**	**100W**	**1**	**A**	**☐**	**☐**
Panel Mount	Product Type T – Enclosed L – L Frame*	Output Voltage Dual Output D2– 24V / 5V	Output Power	Single Phase	No PFC	Connector Type A – Terminal Block G – Front Face* H – Harness*	Blank – Without connector cover A – With connector cover

*Options

All parameters are specified at 25°C ambient unless otherwise indicated.
www.DeltaPSU.com (October 2013, Rev. 00)

PMT Panel Mount Power Supply

24V / 5V 100W Dual Output / PMT-D2V100W1A□□

Specifications

Input Ratings / Characteristics

Nominal Input Voltage	100-120Vac, 200-240Vac (Selectable by Switch)
Input Voltage Range	85-132Vac, 170-264Vac (Selectable by Switch)
Nominal Input Frequency	50-60Hz
Input Frequency Range	47-63Hz
Input Current	< 2.00A @ 115Vac, < 1.20A @ 230Vac
Efficiency at 100% Load	> 84.0% typ. @ 230Vac
Max Inrush Current	< 45A typ. @ 230Vac
Leakage Current	< 0.2mA @ 240Vac

Output Ratings / Characteristics

Nominal Output Voltage	V1: 24Vdc, V2: 5Vdc
Output Voltage Tolerance	± 1% (initial set point tolerance from factory)
Output Voltage Adjustment Range	V1: 21.6-26.4Vdc
Output Current	V1: 3.50A, V2: 3.00A
Output Power	99W
Line Regulation	± 0.5% typ. (@ 100-132Vac & 200-264Vac)
Load Regulation	V1: ± 1% typ. (@ 100-132Vac & 200-264Vac) V2: ± 2% typ. (@ 100-132Vac & 200-264Vac)
PARD (20MHz)	V1: < 120mVpp, V2: < 80mVpp
Rise Time	< 30ms @ 115Vac & 230Vac (100% load)
Start-up Time	< 1200ms @ 115Vac, < 2000ms @ 230Vac (100% load)
Hold-up Time	> 20ms @ 115Vac, > 25ms @ 230Vac
Dynamic Response (Overshoot & Undershoot O/P Voltage)	± 5% @ 0-100% load
Start-up with Capacitive Loads	8,000μF Max

Mechanical

Case Chassis		Aluminium
Case Cover		SGCC
Dimensions (L x W x D)		178 x 97 x 38 mm
Unit Weight		0.42 kg
Indicator		Green LED (DC OK)
Cooling System		Convection
Terminal	PM□-D2V100W1AA□	M3.5 x 7 Pins (Rated 300V/15A)
	PM□-D2V100W1AG□	M3.5 x 7 Pins (Rated 300V/20A)
	PM□-D2V100W1AH□	I/P (JWT): A3963WV2-5P-A O/P (JWT): A3963WV2-7P-U
Wire	PM□-D2V100W1AA□ / PM□-D2V100W1AG□	AWG 22-12
	PM□-D2V100W1AH□	AWG 22-18 (For the recommended Housing and Terminal, please refer to the Table on Page 7)

PMT Panel Mount Power Supply

24V / 5V 100W Dual Output / PMT-D2V100W1A□□

Environment

Surrounding Air Temperature	Operating	-10°C to +70°C
	Storage	-25°C to +85°C
Power De-rating		> 50°C de-rate power by 2.5% / °C < 100Vac de-rate power by 0.8% / 1V
Operating Humidity		5 to 95% RH (Non-Condensing)
Operating Altitude		0 to 5,000 Meters
Shock Test (Non-Operating)		IEC 60068-2-27, Half Sine: 50G for a duration of 11ms, 3 times per direction, 18 times in total
Vibration (Non-Operating)		IEC 60068-2-6, Random: 5Hz to 500Hz (2.09Grms); 20 min per axis for all X, Y, Z direction
Pollution Degree		2

Protections

Overvoltage	V1: 115-135%, Hicc-up Mode, Non-Latching (Auto-Recovery)
Overload / Overcurrent	V1: 110-150%, Hicc-up Mode, Non-Latching (Auto-Recovery)
Over Temperature	Hicc-up Mode, Non-Latching (Auto-Recovery when the fault is removed)
Short Circuit	Hicc-up Mode, Non-Latching (Auto-Recovery when the fault is removed)
Protection Against Shock	Class I with PE* connection

*PE: Primary Earth

Reliability Data

MTBF	> 700,000 hrs. as per Telcordia SR-332
Expected Cap Life Time	10 years (115Vac & 230Vac, 50% load @ 40°C)

Safety Standards / Directives

Electrical Safety		TUV Bauart to EN 60950-1, UL/cUL recognized to UL 60950-1 and CSA C22.2 No. 60950-1, CB scheme to IEC 60950-1, CCC to GB4943
CE		In conformance with EMC Directive 2004/108/EC and Low Voltage Directive 2006/95/EC
Material and Parts		RoHS Directive 2011/65/EU Compliant
Galvanic Isolation	Input to Output	3.0KVac
	Input to Ground	1.5KVac
	Output to Ground	0.5KVac

PMT Panel Mount Power Supply

24V / 5V 100W Dual Output / PMT-D2V100W1A□□

EMC

EMC / Emissions		CISPR 22, EN 55022, FCC Title 47: Class B
Immunity to		
Electrostatic Discharge	IEC 61000-4-2	Level 4 Criteria A[1)] Air Discharge: 15kV Contact Discharge: 8kV
Radiated Field	IEC 61000-4-3	Level 2 Criteria A[1)] 80MHz-1GHz, 3V/M with 1kHz tone / 80% modulation
Electrical Fast Transient / Burst	IEC 61000-4-4	Level 2 Criteria A[1)] 2kV
Surge	IEC 61000-4-5	Level 3 Criteria A[1)] Common Mode[2)]: 2kV Differential Mode[3)]: 1kV
Conducted	IEC 61000-4-6	Level 2 Criteria A[1)] 150kHz-80MHz, 3Vrms
Power Frequency Magnetic Fields	IEC 61000-4-8	Criteria A[1)] Magnetic field strength 30A/Meter
Voltage Dips	IEC 61000-4-11	100% dip; 1 cycle (20ms); Self Recoverable
Low Energy Pulse Test (Ring Wave)	IEC 61000-4-12	Level 3 Criteria [1)] Common Mode[2)]: 2kV Differential Mode[3)]: 1kV
Harmonic Current Emission		IEC/EN 61000-3-2, Class A
Voltage Fluctuation and Flicker		IEC/EN 61000-3-3

1) Criteria A: Normal performance within the specification limits
2) Asymmetrical: Common mode (Line to earth)
3) Symmetrical: Differential mode (Line to line)

PMT Panel Mount Power Supply

24V / 5V 100W Dual Output / PMT-D2V100W1A□□

Block Diagram

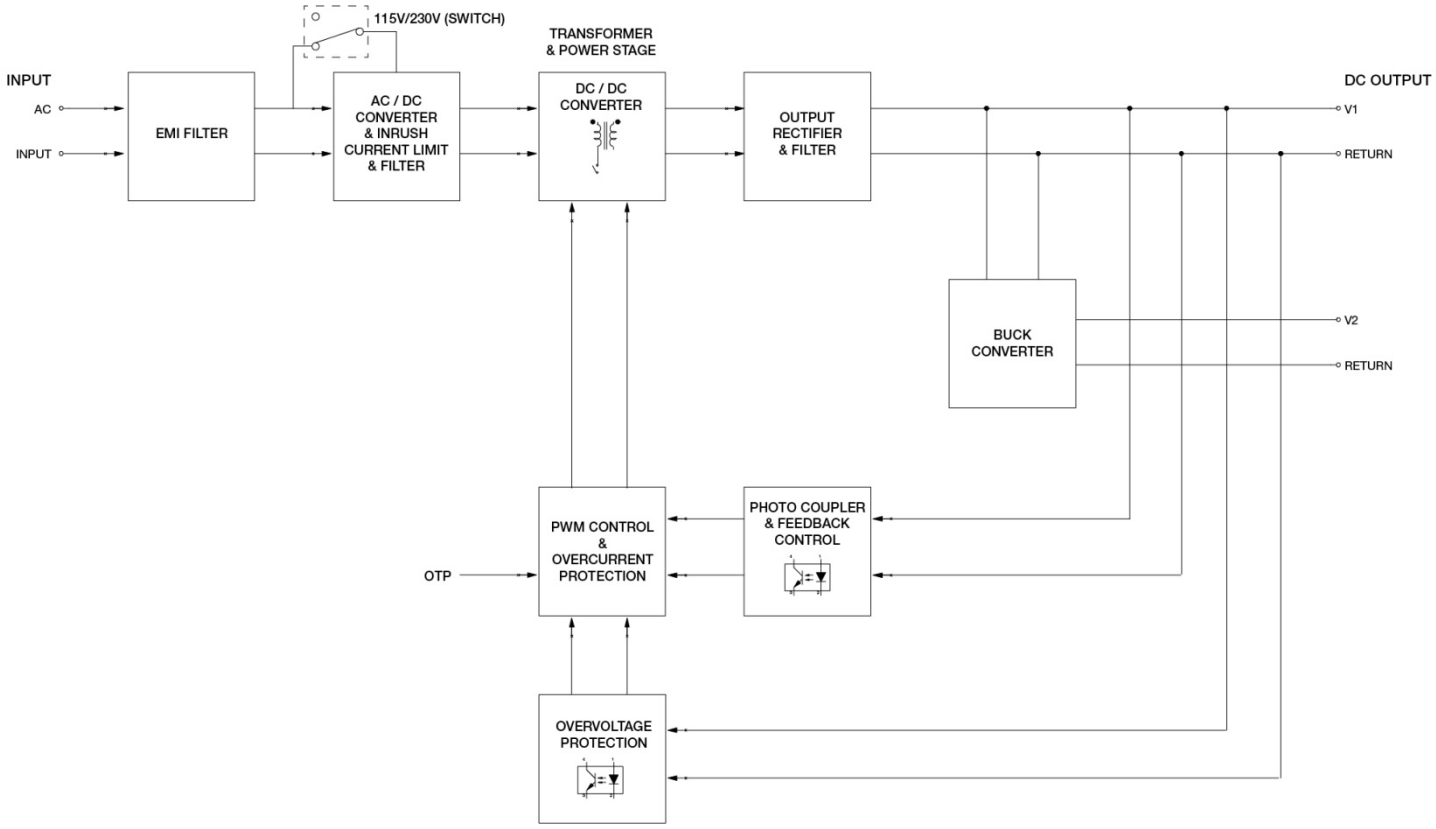

All parameters are specified at 25°C ambient unless otherwise indicated.

PMT Panel Mount Power Supply

24V / 5V 100W Dual Output / PMT-D2V100W1A□□

\Device Description

PMT-D2V100W1AA□: Terminal Block

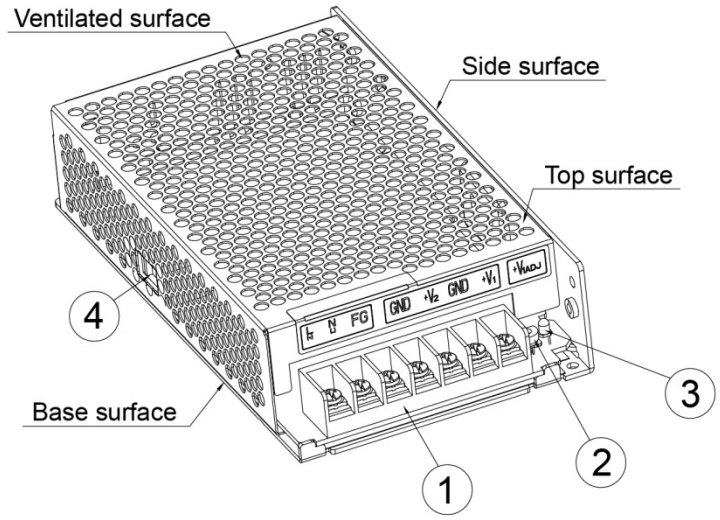

PMT-D2V100W1AG□: Front Face

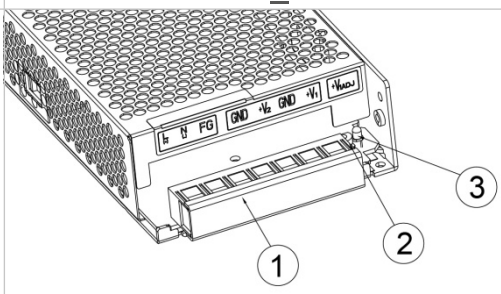

PMT-D2V100W1AH□: Harness

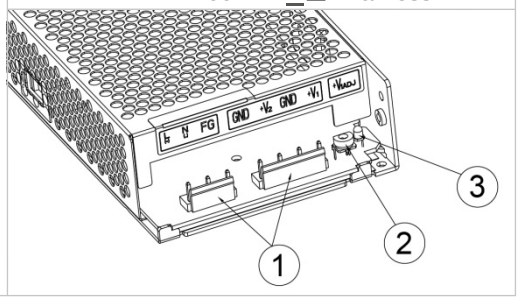

1) Input & Output terminal block connector
2) DC voltage adjustment potentiometer
3) DC OK control LED (Green)
4) AC selectable switch

Dimensions

L x W x D: 178 x 97 x 38 mm

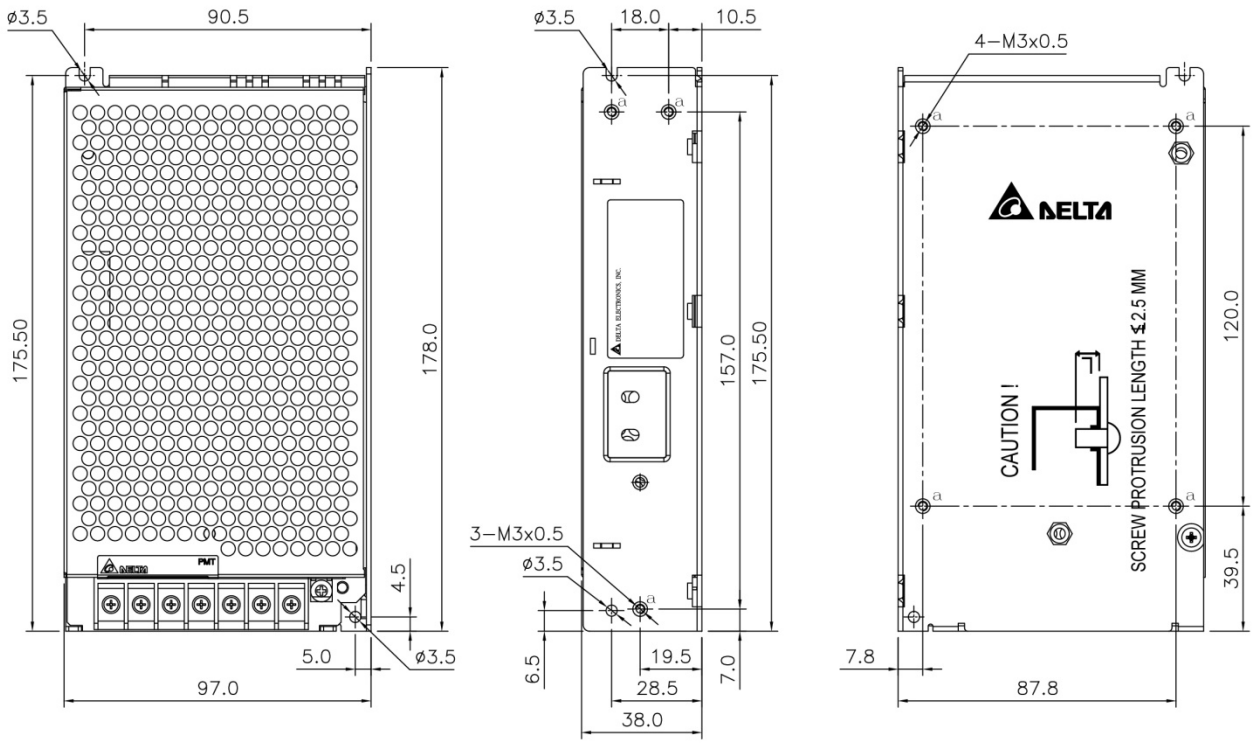

All parameters are specified at 25°C ambient unless otherwise indicated.
www.DeltaPSU.com (October 2013, Rev. 00)

PMT Panel Mount Power Supply

24V / 5V 100W Dual Output / PMT-D2V100W1A□□

Engineering Data

De-rating

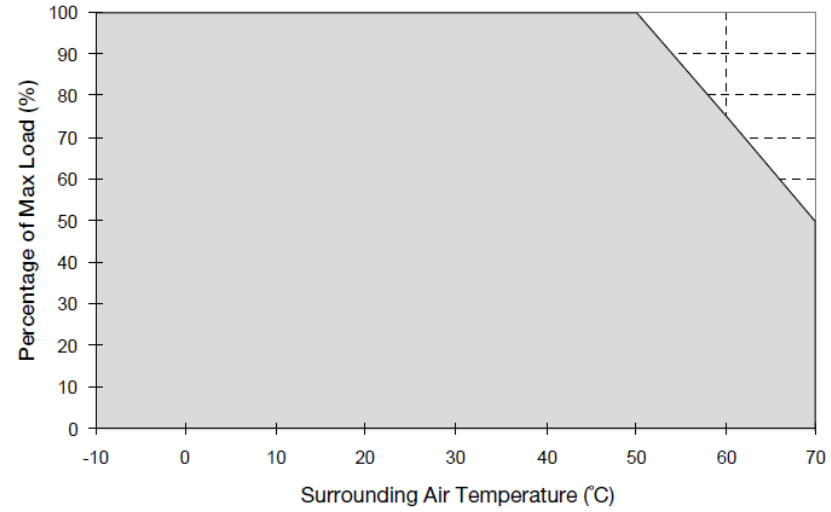

Fig. 1 De-rating for Vertical and Horizontal Mounting Orientation
> 50°C de-rate power by 2.5% / °C

Note

1. Power supply components may degrade, or be damaged, when the power supply is continuously used outside the shaded region, refer to the graph shown in Fig. 1.
2. If the output capacity is not reduced when the surrounding air temperature >70°C, the device will run into Over Temperature Protection. When activated, the output voltage will go into bouncing mode and will recover when the surrounding air temperature is lowered or the load is reduced as far as necessary to keep the device in working condition.
3. In order for the device to function in the manner intended, it is also necessary to keep a safety distance of 20mm with adjacent units while the device is in operation.
4. Depending on the surrounding air temperature and output load delivered by the power supply, the device can be very hot!
5. If the device has to be mounted in any other orientation, please do not hesitate to contact **info@deltapsu.com** for more details.

Output De-rating VS. Input Voltage

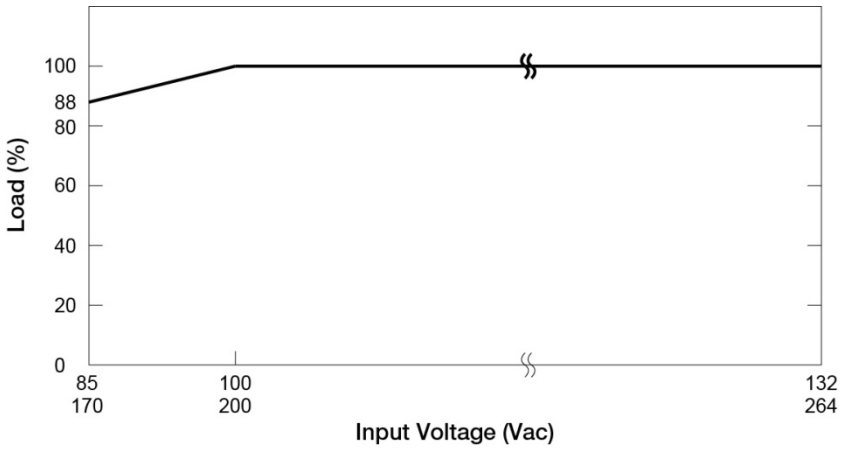

- No output power de-rating for the input voltage from 100Vac to 132Vac & 200Vac to 264Vac

All parameters are specified at 25°C ambient unless otherwise indicated.

PMT Panel Mount Power Supply

24V / 5V 100W Dual Output / PMT-D2V100W1A□□

Assembly & Installation

Mounting holes for power supply assembly onto the mounting surface.

Ⓐ The power supply shall be mounted on minimum 2 mounting holes using M3 screw minimum 5mm length.
Ⓑ This surface belongs to customer's end system or panel where the power supply is mounted.
Ⓒ Connector

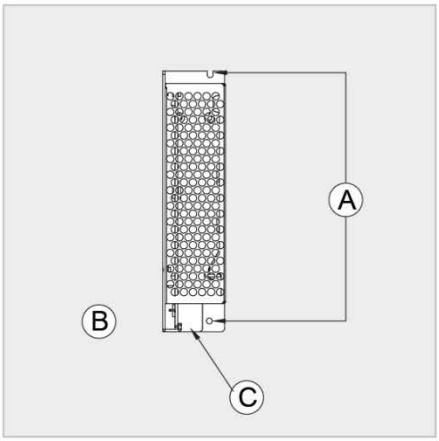

Fig. 2.1 Side Mounting (Vertical)

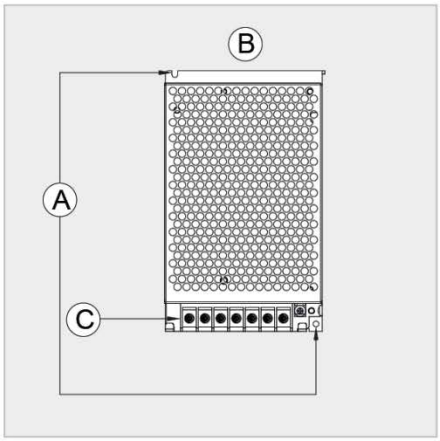

Fig. 2.2 Base Mounting (Vertical)

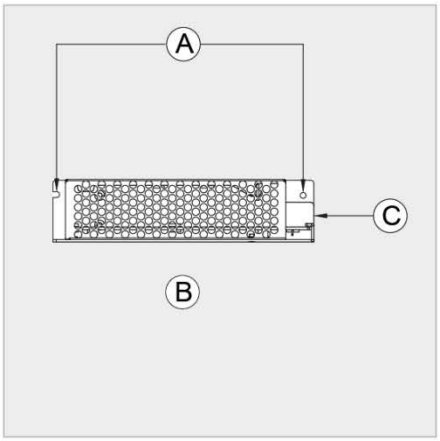

Fig. 2.3 Side Mounting (Horizontal)

– **PM□-D2V100W1AA□ / PM□-D2V100W1AG□:** Use flexible cable (stranded or solid) of AWG No. 22-12. The torque at the connector shall not exceed 13Kgf.cm. The insulation stripping length should not exceed 0.275" or 7mm.
– **PM□-D2V100W1AH□:** Use flexible cable (stranded or solid) of AWG No. 22-18. Please refer to Table 1 for the recommended Housing and Terminal.

Table 1	Connector (Board Mounting)	Housing	Terminal
Input (JWT)	A3963WV2-5P-A	A3963H02-5P	A3963T0P-2
Output (JWT)	A3963WV2-7P-U	A3963H02-7P	

Improper Installations

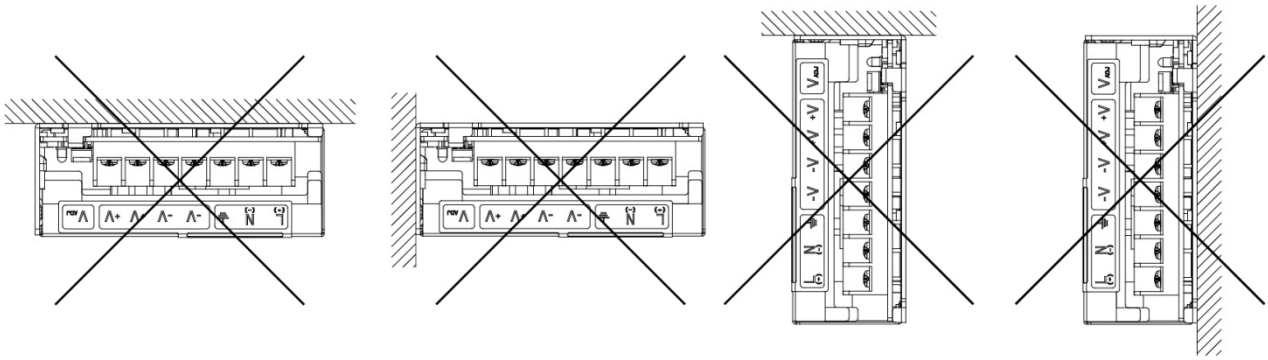

All parameters are specified at 25°C ambient unless otherwise indicated.
www.DeltaPSU.com (October 2013, Rev. 00)

PMT Panel Mount Power Supply

24V / 5V 100W Dual Output / PMT-D2V100W1A□□

Installation of Mounting Accessories

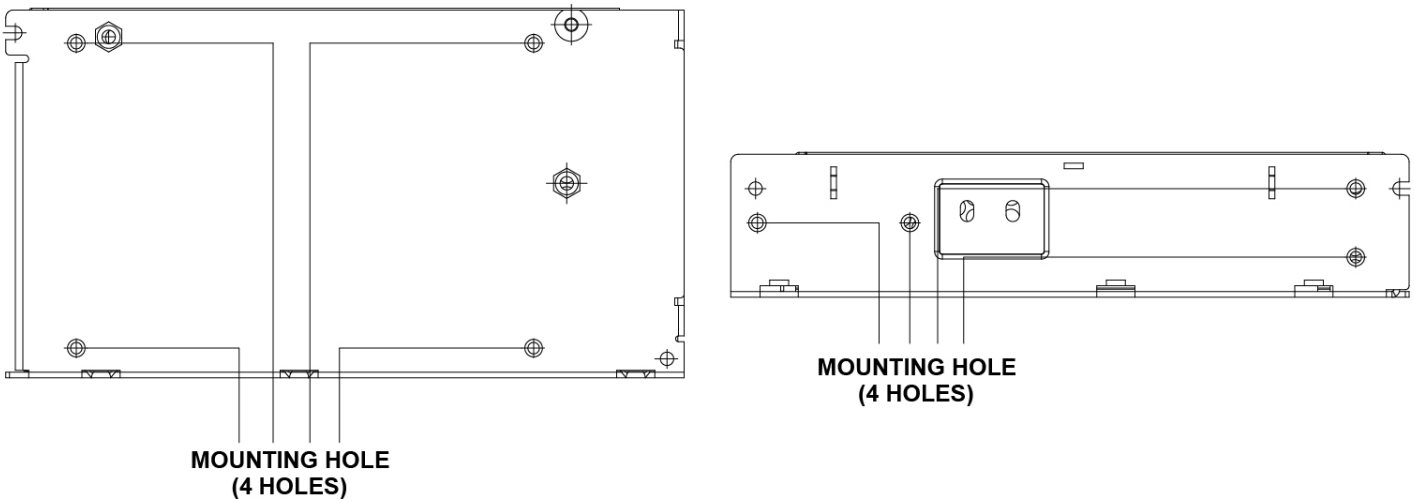

Fig. 3 Mounting Hole Locations

With reference to Fig. 3, the device should be mounted on a sturdy heat conducting surface with minimum of 4 mounting holes for base mounting or 3 mounting holes for side mounting. Use M3 screws only.

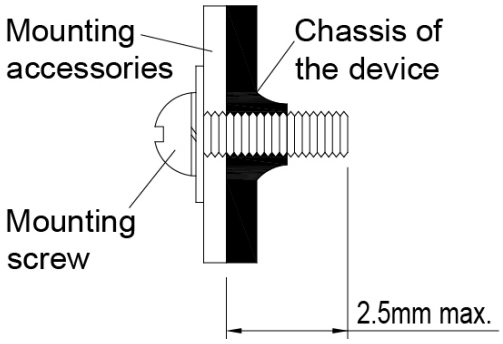

- Only use M3 screw ≤ 2.5mm through the base and side mounting holes. This is to keep a safe distance between the screw and internal components.
- Recommended mounting tightening torque: 4~7Kgf.cm.

Safety Instructions

– Must select correct AC input voltage before turning on (Refer to the “Device Description” on Page 5).
– To ensure sufficient convection cooling, always maintain a safety distance of ≥ 20mm from all ventilated surfaces while the device is in operation.
– The device is not recommended to be placed on low thermal conductive surfaces, for example, plastics.
– Note that the enclosure of the device can become very hot depending on the ambient temperature and load of the power supply. Do not touch the device while it is in operation or immediately after power is turned OFF. Risk of burning!
– Do not touch the terminals while power is being supplied. Risk of electric shock.
– Prevent any foreign metal, particles or conductors to enter the device through the openings during installation. It can cause: - Electric shock; Safety Hazard; Fire; Product failure.
– The power supply must be mounted by metal screws onto a grounded metal surface. It is also highly recommended that the Earth terminal on the connector be connected to the grounded metal surface.
– Warning (For Standard Terminal Block and Front Face Terminal Block products): When connecting the device, secure Earth connection before connecting L and N. When disconnecting the device, remove L and N connections before removing the Earth connection.

PMT Panel Mount Power Supply

24V / 5V 100W Dual Output / PMT-D2V100W1A□□

Functions

Start-up Time

The time required for the output voltage to reach 90% of its set value, after the input voltage is applied.

Rise Time

The time required for the output voltage to change from 10% to 90% of its set value.

Hold-up Time

Hold up time is the time when the AC input collapses and output voltage retains regulation for a certain period of time. The time required for the output to reach 95% of its set value, after the input voltage is removed.

■ **Graph illustrating the Start-up Time, Rise Time, and Hold-up Time**

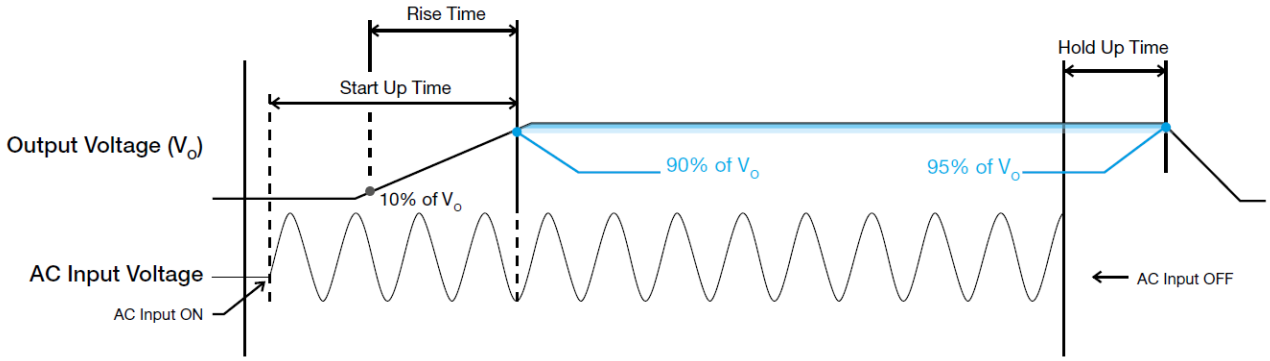

Inrush Current

Inrush current is the peak, instantaneous, input current measured and, occurs when the input voltage is first applied. For AC input voltages, the maximum peak value of inrush current will occur during the first half cycle of the applied AC voltage. This peak value decreases exponentially during subsequent cycles of AC voltage.

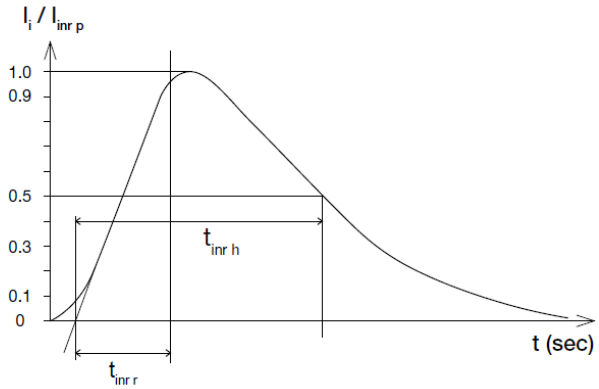

Dynamic Response

The power supply output voltage (V1) will remain within ±5% of its steady state value, when subjected to a dynamic load from 0 to 100% of its rated current.

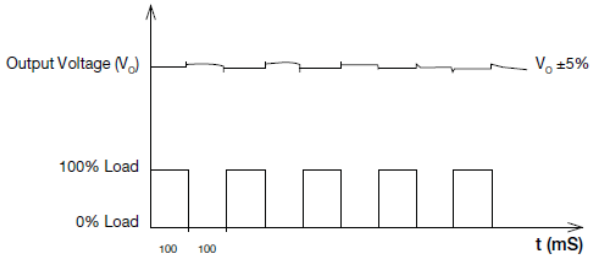

All parameters are specified at 25°C ambient unless otherwise indicated.

PMT Panel Mount Power Supply

24V / 5V 100W Dual Output / PMT-D2V100W1A□□

Overload & Overcurrent Protections

The power supply's Overload (OLP) and Overcurrent (OCP) Protections will be activated when output current (I1) exceeds 110-150% of I_O (Max load). In such occurrence, the V1 will start to droop and once the power supply has reached its maximum power limit, the protection is activated and the power supply will go into "Hiccup mode" (Auto-Recovery). The power supply will recover once the fault condition of the OLP and OCP is removed and I_O is back within the specifications.

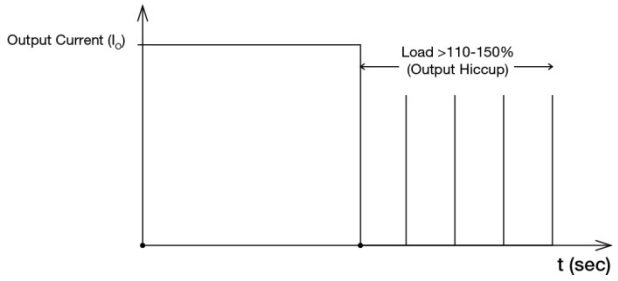

It is not recommended to prolong the duration of I_O when it is <110-150% but >100%, since it may cause damage to the PSU.

Short Circuit Protection

The power supply's output OLP/OCP function also provides protection against short circuits. When a short circuit is applied, the output current will operate in "Hiccup mode", as shown in the illustration in the OLP/OCP section on this page. The power supply will return to normal operation after the short circuit is removed.

Overvoltage Protection

The power supply's overvoltage circuit will be activated when its internal feedback circuit fails. The output voltage (V1) shall not exceed its specifications defined on Page 3 under "Protections".

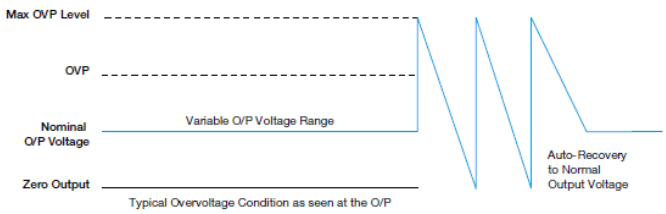

Over Temperature Protection

As mentioned above, the power supply also has Over Temperature Protection (OTP). In the event of a higher operating temperature at 100% load, the power supply will run into OTP when the operating temperature is beyond what is recommended in the de-rating graph. When activated, the output voltage will go into bouncing mode until the temperature drops to its normal operating temperature as recommended in the de-rating graph.

Others

Delta RoHS Compliant

Restriction of the usage of hazardous substances

The European directive 2011/65/EU limits the maximum impurity level of homogeneous materials such as lead, mercury, cadmium, chrome, polybrominated flame retardants PBB and PBDE for the use in electrical and electronic equipment. RoHS is the abbreviation for "Restriction of the use of certain hazardous substances in electrical and electronic equipment".

This product conforms to this standard.

PFC – Norm EN 61000-3-2

Line Current Harmonic content

Typically, the input current waveform is not sinusodial due to the periodical peak charging of the input capacitor. In industrial environment, complying with EN 61000-3-2 is only necessary under special conditions. Complying to this standard can have some technical drawbacks, such as lower efficiency as well as some commercial aspects such as higher purchasing costs. Frequently, the user does not profit from fulfilling this standard, therefore, it is important to know whether it is mandatory to meet this standard for a specific application.

Mouser Electronics

Authorized Distributor

Click to View Pricing, Inventory, Delivery & Lifecycle Information:

Delta:

PMT-D2V100W1AA