Low Noise, High IP3

Monolithic Amplifier

PMA-545+

50Ω 0.05 to 6 GHz



3mm x 3mm MCLP [EIA: QFN) Pkg

☛ *LTE Performance*

The Big Deal

- Ultra Low Noise Figure, 0.8 dB
- Ultra High IP3
- Up to 6 GHz

Product Overview

Mini-Circuits PMA-545+ is a E-PHEMT based Ultra-Low Noise MMIC Amplifier operating from 50 MHz to 6 GHz with a unique combination of low noise and high IP3 making this amplifier ideal for sensitive receiver applications. This design operates on a single 3V supply and is internally matched to 50 Ohms.

Summary Performance at 1 GHz		
Operating Frequency:	0.05 to 6.0	GHz
Noise Figure	0.8	dB, typ.
Gain	20	dB, typ.
IP3	+36	dBm, typ.
P_{OUT} (at 1dB)	+20	dBm, typ.
DC Current (at 3V)	80	mA, typ.

Key Features

Feature		Advantages
Ultra Low Noise:	0.8 dB NF at 1GHz	Industry Leading Noise Figure, measured in a 50 Ohm environment – without any external matching
High IP3:	+36 dBm IP3 at 1GHz	Combining Low Noise and High IP3 makes this MMIC amplifier ideal for Low Noise Receiver Front End (RFE) because it gives the user advantages at both ends of the dynamic range: sensitivity & two-tone IM dynamic range
Output Power:	+20 dBm at 1GHz	The PMA-545+ maintains consistent output power capability over the full operating temperature range making it ideal to be used in remote applications such as LNB's as the L Band driver stage
Broad Band:	0.05 to 6.0GHz	Broadband covering primary wireless communications bands: Cellular, PCS, LTE, WiMAX
Internally Matched		No external matching elements required to achieve the advertized noise and output power over the full band
MCLP Package		Low Inductance, repeatable transitions, excellent thermal pad
Max Input Power	+20 dBm	Ruggedized design operates up to input powers often seen at Receiver inputs. Can operate up to + 20dBm without the need of an external limiter
High Reliability		Low, small signal operating current of 80 mA nominal maintains junction temperatures typically below 130°C at 85°C ground lead temperature

Notes
A. Performance and quality attributes and conditions not expressly stated in this specification document are intended to be excluded and do not form a part of this specification document.
B. Electrical specifications and performance data contained in this specification document are based on Mini-Circuit's applicable established test performance criteria and measurement instructions.
C. The parts covered by this specification document are subject to Mini-Circuits standard limited warranty and terms and conditions (collectively, "Standard Terms"); Purchasers of this part are entitled to the rights and benefits contained therein. For a full statement of the Standard Terms and the exclusive rights and remedies thereunder, please visit Mini-Circuits' website at www.minicircuits.com/MCLStore/terms.jsp

Low Noise, High IP3

Monolithic Amplifier 0.05-6 GHz

Product Features

- Single Positive Supply Voltage, 3V
- Ultra Low Noise Figure, 0.8 dB typ. at 1GHz
- High IP3, 36 dBm typ. 1GHz
- Gain, 20dB typ. at 1 GHz
- Output Power, up to +20dBm typ.
- Micro-miniature size - 3mm x 3mm
- Aqueous washable



PMA-545+

CASE STYLE: DQ849

+RoHS Compliant

The +Suffix identifies RoHS Compliance. See our web site for RoHS Compliance methodologies and qualifications

☛ *LTE Performance*

Typical Applications

- Cellular
- ISM
- GSM
- WCDMA
- LTE
- WiMAX
- WLAN
- UNII and HIPERLAN

General Description

PMA-545+ is a high dynamic range, low noise, high IP3, high output power, monolithic amplifier. Manufactured using E-PHEMT* technology enables it to work with a single positive supply voltage. Unconditionally stable over the operating frequency.

simplified schematic and pad description

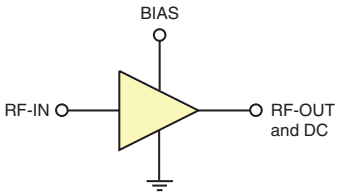

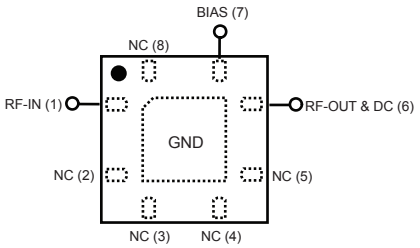

Function	Pad Number	Description *(See Application Circuit, Fig. 2)*
RF-IN	1	RF input pad
RF-OUT & DC	6	RF output pad (connected to RF-OUT via blocking external cap C2, and Supply voltage Vs via RF Choke L1)
BIAS	7	Bias pad (connected to Vs via Rbias)
GND	paddle in center of bottom	Connected to ground
NOT USED	2,3,4,5,8	No internal connection; recommended use: per PCB Layout PL-299

*Enhancement mode Pseudomorphic High Electron Mobility Transistor.

Notes
A. Performance and quality attributes and conditions not expressly stated in this specification document are intended to be excluded and do not form a part of this specification document.
B. Electrical specifications and performance data contained in this specification document are based on Mini-Circuit's applicable established test performance criteria and measurement instructions.
C. The parts covered by this specification document are subject to Mini-Circuits standard limited warranty and terms and conditions (collectively, "Standard Terms"); Purchasers of this part are entitled to the rights and benefits contained therein. For a full statement of the Standard Terms and the exclusive rights and remedies thereunder, please visit Mini-Circuits' website at www.minicircuits.com/MCLStore/terms.jsp

Electrical Specifications[1] at 25°C, Zo=50Ω, *(refer to characterization circuit)*

Parameter	Condition (GHz)	Min.	Typ.	Max.	Units
Frequency Range		0.05		6.0	GHz
DC Voltage (V_d)			3.0		V
DC Current (I_d)[6]		65	80	98	mA
DC Current (I_{Rbias})			5.6		mA
Noise Figure	0.05 0.5 1.0 2.0 3.0 4.0 5.0 6.0		1.3 0.8 0.8 1.0 1.2 1.5 2.0 2.4	— — — 1.3 — — — —	dB
Gain	0.05 0.5 1.0 2.0 3.0 4.0 5.0 6.0	— — — 12.7 — — — —	26.1 23.3 19.4 14.2 11.1 8.9 7.0 5.5	— — — 15.6 — — — —	dB
Input Return Loss	0.05-0.5 0.5-6		11.0 7.0		dB
Output Return Loss	0.05 0.1-4 4-6		13.3 20.0 16.0		dB
Output IP3	0.05 0.5 1.0 2.0 3.0 4.0 5.0 6.0		32.8 35.1 36.3 36.4 38.1 40.0 36.0 37.6		dBm
Output Power @ 1 dB compression [2]	0.05 0.5 1.0 2.0 3.0 4.0 5.0 6.0	— — — 18.3 — — — —	19.6 19.9 19.3 20.3 20.1 20.7 20.0 21.2		dBm
DC Current Variation vs. Temperature [3]			-0.121		mA/°C
Thermal Resistance			128		°C/W

Absolute Maximum Ratings[4]

Parameter	Ratings
Operating Temperature [5]	-40°C to 85°C
Storage Temperature	-55°C to 100°C
Channel Temperature	150°C
DC Voltage (Pad 6)	5V
Power Dissipation	500mW
DC Current (Pad 6)	160mA
Bias Current (Pad 7)	10mA
Input Power[7]	20dBm

[1] Measured on Mini-Circuits Characterization test board TB-502+. See Characterization Test Circuit (Fig. 1)
[2] Current increases at P1dB
[3] (Current at 85°C - Current at -45°C)/130
[4] Permanent damage may occur if any of these limits are exceeded. These maximum ratings are not intended for continuous normal operation.
[5] Defined with reference to ground pad temperature.
[6] Specified DC current consumption is under small signal conditions. Current will increase with input RF Power. To maintain maximum current consumption, external DC current limiting circuits are required on Vd line.
[7] Maximum input power is specified based external Vd current limiting of 100 mA. Maximum input power will degrade without external current limiting.

Notes
A. Performance and quality attributes and conditions not expressly stated in this specification document are intended to be excluded and do not form a part of this specification document.
B. Electrical specifications and performance data contained in this specification document are based on Mini-Circuit's applicable established test performance criteria and measurement instructions.
C. The parts covered by this specification document are subject to Mini-Circuits standard limited warranty and terms and conditions (collectively, "Standard Terms"); Purchasers of this part are entitled to the rights and benefits contained therein. For a full statement of the Standard Terms and the exclusive rights and remedies thereunder, please visit Mini-Circuits' website at www.minicircuits.com/MCLStore/terms.jsp

Characterization Test Circuit

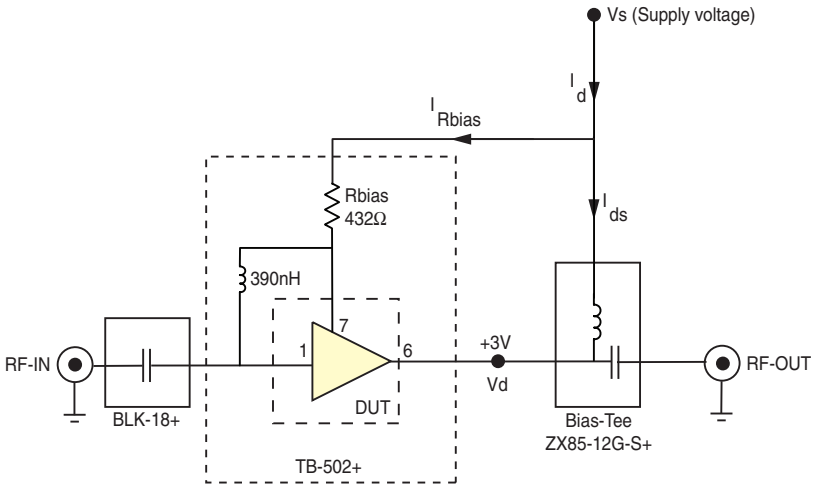

Fig 1. Block Diagram of Test Circuit used for characterization. (DUT soldered on Mini-Circuits Characterization Test Board TB-502+) Gain, Output power at 1dB compression (P1dB), Output IP3 (OIP3) are measured using R&S Network Analyzer ZVA-24. Noise Figure measured using Agilent's N5242A PNA-X microwave network analyzer.

Conditions:
1. Gain: Pin=-25 dBm
2. Output IP3 (OIP3): Two tones, spaced 1 MHz apart, 0 dBm/tone at output.
3. Vs adjusted for 3V at device (Vd), compensating loss of bias tee.

Notes
A. Performance and quality attributes and conditions not expressly stated in this specification document are intended to be excluded and do not form a part of this specification document.
B. Electrical specifications and performance data contained in this specification document are based on Mini-Circuit's applicable established test performance criteria and measurement instructions.
C. The parts covered by this specification document are subject to Mini-Circuits standard limited warranty and terms and conditions (collectively, "Standard Terms"); Purchasers of this part are entitled to the rights and benefits contained therein. For a full statement of the Standard Terms and the exclusive rights and remedies thereunder, please visit Mini-Circuits' website at www.minicircuits.com/MCLStore/terms.jsp

Product Marking

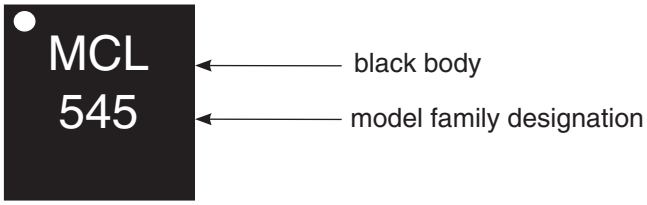

Additional Detailed Technical Information

Additional information is available on our web site www.minicircuits.com. To access this information enter the model number on our web site home page.

Performance data, graphs, s-parameter data set (.zip file)

Case Style: DQ849
Plastic package, exposed paddle, lead finish: tin-silver over nickel

Tape & Reel: F104
Standard quantities availabe on reel: *7" reels with 20, 50, 100, 200, 500, 1K, or 2K devices.*

Suggested Layout for PCB Design: PL-299

Evaluation Board: TB-501+

Environmental Ratings: ENV08T1

Recommended Application Circuit

(refer to evaluation board for PCB Layout and component values)

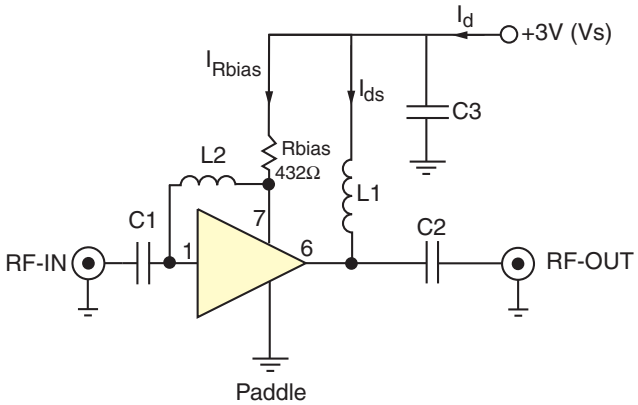

Fig 2. Recommended Application Circuit
Note: Resistance of L1, 0.1-0.2Ω typically

Notes
A. Performance and quality attributes and conditions not expressly stated in this specification document are intended to be excluded and do not form a part of this specification document.
B. Electrical specifications and performance data contained in this specification document are based on Mini-Circuit's applicable established test performance criteria and measurement instructions.
C. The parts covered by this specification document are subject to Mini-Circuits standard limited warranty and terms and conditions (collectively, "Standard Terms"); Purchasers of this part are entitled to the rights and benefits contained therein. For a full statement of the Standard Terms and the exclusive rights and remedies thereunder, please visit Mini-Circuits' website at www.minicircuits.com/MCLStore/terms.jsp

ESD Rating

Human Body Model (HBM): Class 1A (250V to <500V) in accordance with ANSI/ESD STM 5.1 - 2001

Machine Model (MM): Class M1 (<100V) in accordance with ANSI/ESD STM5.2-1999; passes 40V

MSL Rating

Moisture Sensitivity: MSL1 in accordance with IPC/JEDEC J-STD-020D

MSL Test Flow Chart

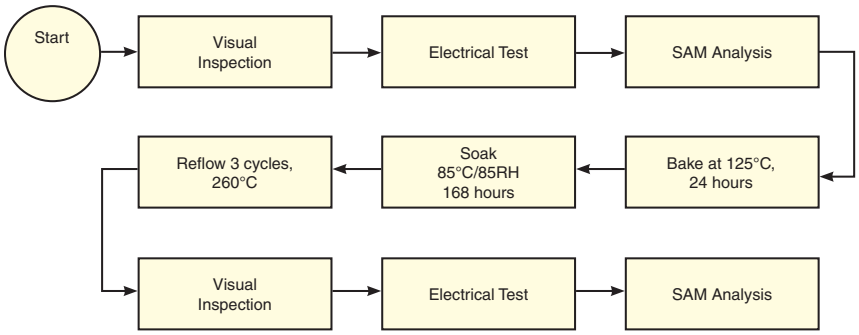

Notes
A. Performance and quality attributes and conditions not expressly stated in this specification document are intended to be excluded and do not form a part of this specification document.
B. Electrical specifications and performance data contained in this specification document are based on Mini-Circuit's applicable established test performance criteria and measurement instructions.
C. The parts covered by this specification document are subject to Mini-Circuits standard limited warranty and terms and conditions (collectively, "Standard Terms"); Purchasers of this part are entitled to the rights and benefits contained therein. For a full statement of the Standard Terms and the exclusive rights and remedies thereunder, please visit Mini-Circuits' website at www.minicircuits.com/MCLStore/terms.jsp