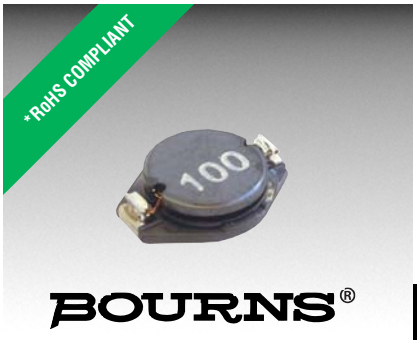

BOURNS®

Features

- Formerly J.W. Miller® model
- Height of 3.0 mm max.
- Current rating up to 2.0 A
- RoHS compliant*

Applications

- Input/output of DC/DC converters
- Industrial electronics
- Power supplies for:
  - Portable communications equipment
  - Camcorders
  - LCD TVs
  - Car radios

PM3308 Series - SMD Power Inductors

Electrical Specifications

Bourns Part No.	Inductance 100 kHz (µH)	Inductance 100 kHz Tol. (%)	Test Frequency (MHz)	DCR Max. (mΩ)	Irms (A)	Isat (A)
PM3308-100M-RC	10	±20	2.52	0.11	2.00	2.40
PM3308-150M-RC	15	±20	2.52	0.15	1.50	2.00
PM3308-220M-RC	22	±20	2.52	0.23	1.30	1.60
PM3308-330M-RC	33	±20	2.52	0.30	1.10	1.40
PM3308-470M-RC	47	±20	2.52	0.39	0.80	1.00
PM3308-680M-RC	68	±20	2.52	0.7	0.70	0.90
PM3308-101M-RC	100	±20	0.796	0.8	0.60	0.70
PM3308-151M-RC	150	±20	0.796	1.2	0.50	0.60
PM3308-221M-RC	220	±20	0.796	1.9	0.40	0.50
PM3308-331M-RC	330	±20	0.796	2.7	0.30	0.40
PM3308-471M-RC	470	±20	0.796	4.0	0.20	0.30
PM3308-681M-RC	680	±20	0.796	5.3	0.10	0.20
PM3308-102M-RC	1000	±20	0.252	8.4	0.05	0.10

Electrical Schematic

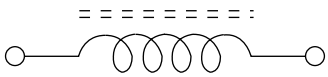

Typical Part Marking



General Specifications

Test Voltage ..... 0.1 V
Reflow Soldering ... 230 °C; 50 sec. max.
Operating Temperature
..... -55 °C to +125 °C
(Temperature rise included)
Storage Temperature ... -55 °C to +125 °C
Resistance to Soldering Heat
..... 260 °C, 10 sec. max.

Materials

Core ..... Ferrite
Wire ..... Enameled copper
Terminal ..... Sn/Ni/Cu
Rated Current
..... Ind. drop 10 % typ. at Isat
Temperature Rise
..... 30 °C typical at Irms
Packaging ..... 1000 pcs. per reel

Product Dimensions

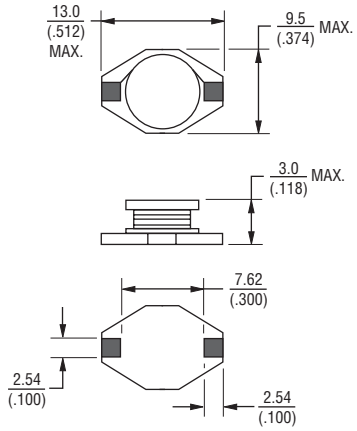

Recommended Pad Layout

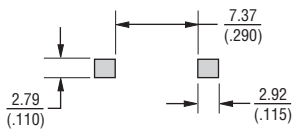

DIMENSIONS: MM (INCHES)

*RoHS Directive 2002/95/EC Jan. 27, 2003 including annex and RoHS Recast 2011/65/EU June 8, 2011.
Specifications are subject to change without notice.
Customers should verify actual device performance in their specific applications.

Inductance vs. Current

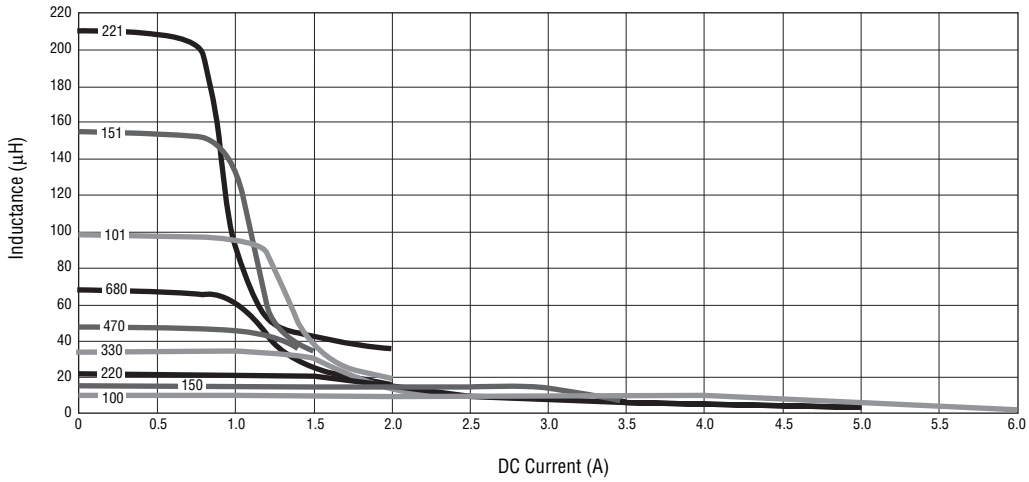

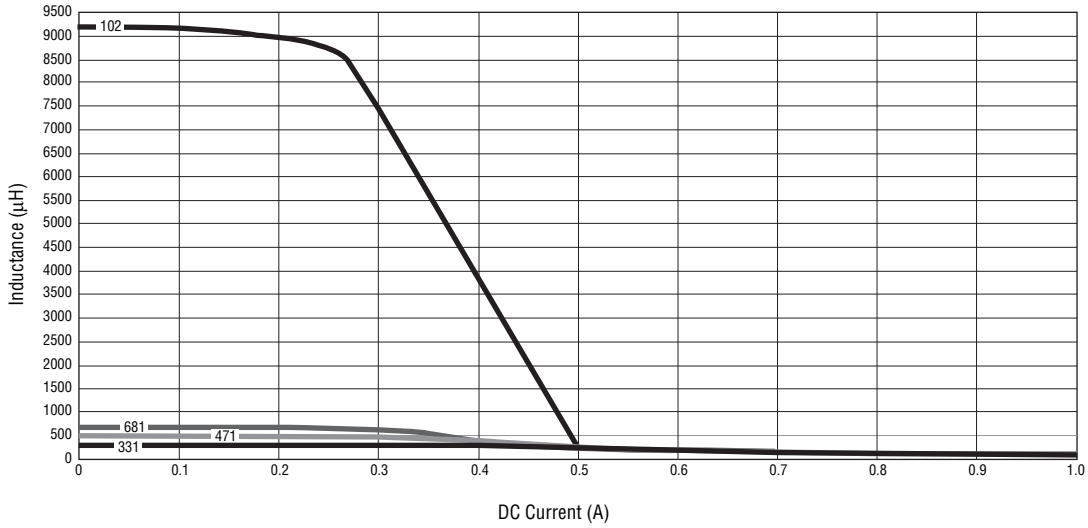

Specifications are subject to change without notice.
Customers should verify actual device performance in their specific applications.

Packaging Specifications

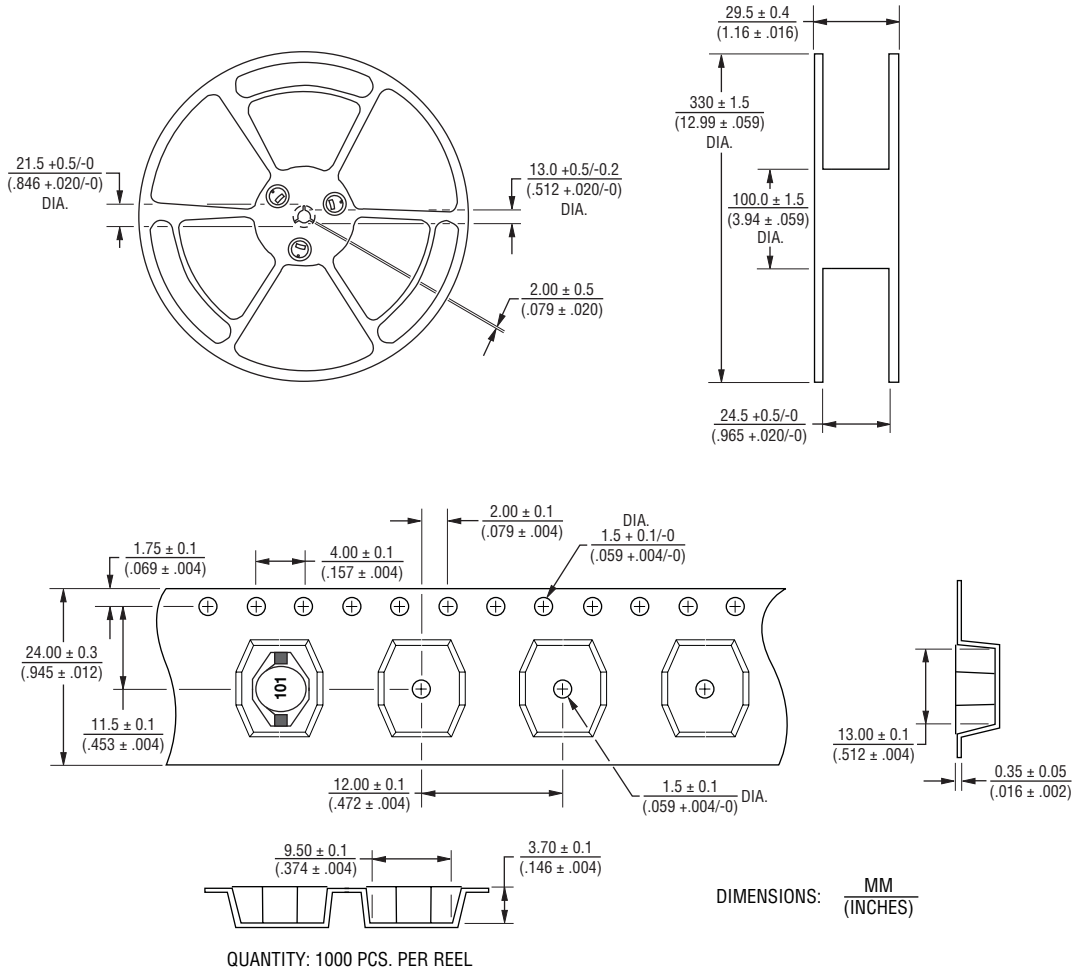

DIMENSIONS: MM / (INCHES)

QUANTITY: 1000 PCS. PER REEL

Specifications are subject to change without notice.
Customers should verify actual device performance in their specific applications.