SOLID STATE DEVICES, INC.
14830 Valley View Blvd * La Mirada, Ca 90638
Phone: (562) 404-7855 * Fax: (562) 404-1773
ssdi@ssdi-power.com * www.ssdi-power.com

SPMR534 SERIES

DESIGNER'S DATA SHEET

60 A / 3000V
HIGH CURRENT/HIGH VOLTAGE RECTIFIER POWER MODULE

FEATURES:
- **Radiation Tolerant Design**
- **High Current/High Voltage**
- **Avalanche Breakdown**
- **Proven Space Flight Heritage**
- **Compact and Rugged Construction Offering Weight and Space Savings and Very Low Mechanical Stress**
- **Low Thermal Resistance: 0.45 °C/W**
- **Hermetic Sealed Discrete Elements**
- **TX, TXV, and S-Level Screening Available**
- **Parelene Coating or Epoxy Encapsulation Available**
- **Other Terminal Configuration Available. Consult Factory**

Miniature ASPM

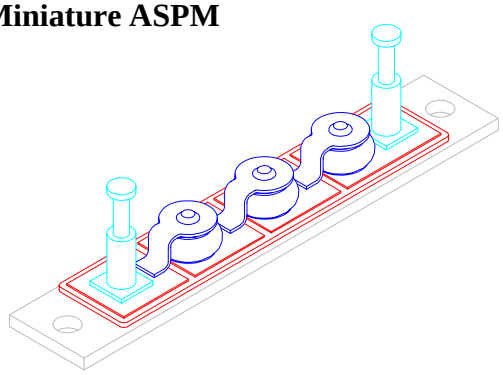

Actual Size

MAXIMUM RATINGS

CHARACTERISTIC	SYMBOL	VALUE			UNIT
		Standard	Fast	Ultra Fast	
Peak Repetitive Reverse and DC Blocking Voltage	V_{RWM} V_R	1800 2500 3000	1800 2500 3000	1800 2500 3000	Volts
Average Rectified Forward Current (Non-repetitive, t = 8.3 ms Pulse)	I_O	60	56	50	Amps
Peak Surge Current (Non-repetitive, t = 8.3 ms Pulse, T_A = 25°C)	I_{FSM}	300	250	225	Amps
Operating Temperature Range	T_{OP}	-65 TO +175	-65 TO +165	-65 TO +150	°C
Storage Temperature Range	T_{STG}	-65 TO +175	-65 TO +175	-65 TO +175	°C
Thermal Resistance, Junction to Base	θ_{JB}	0.45	0.45	0.45	°C/W

Available Part Numbers:
SPMR534-18ST, SPMR534-18FT, SPMR534-18UFT
SPMR534-25ST, SPMR534-25FT, SPMR534-25UFT
SPMR534-30ST, SPMR534-30FT, SPMR534-30UFT

Part Number /Ordering Information

SPMR534- 18 UF T

- **Terminal:** T = Turret
- **Speed:** S = Standard Recovery, F = Fast, UF = Ultra Fast
- **Voltage:** 18 = 1800V, 25 = 2500V, 30 = 3000V

NOTE: All specifications are subject to change without notification.
SCD's for these devices should be reviewed by SSDI prior to release.

DATA SHEET #: PM0018A

SPMR534
SERIES

SOLID STATE DEVICES, INC.
14830 Valley View Blvd * La Mirada, Ca 90638
Phone: (562) 404-7855 * Fax: (562) 404-1773
ssdi@ssdi-power.com * www.ssdi-power.com

ELECTRICAL CHARACTERISTICS (per Section)

RATING		SYMBOL	Standard		Fast		Ultra Fast		UNIT
			MIN	MAX	MIN	MAX	MIN	MAX	
Forward Voltage (T_A = 25°C)	I_F = 1/2 Rated I_F	V_{F1}	--	3.10	--	4.00	--	4.80	V
	I_F = Rated I_F	V_{F2}	--	3.80	--	5.00	--	6.00	
Reverse Leakage Current (V_R = Rated V_R)	T_A = 25°C	I_{R1}	--	10	--	20	--	50	µA
	T_A = +100°C	I_{R2}	--	2.0	--	5.0	--	10	mA
Reverse Recovery Time (I_F = 0.5A, I_R = 1.0A, I_{RR} = 0.25A)		t_{RR}	--	3000	--	200	--	80	nsec
Insulation Resistance (All terminals to Base @V_R = 1.5 Rated V_R)		R_{INS}	1.00	--	1.00	--	1.00	--	GΩ

PACKAGE OUTLINE:

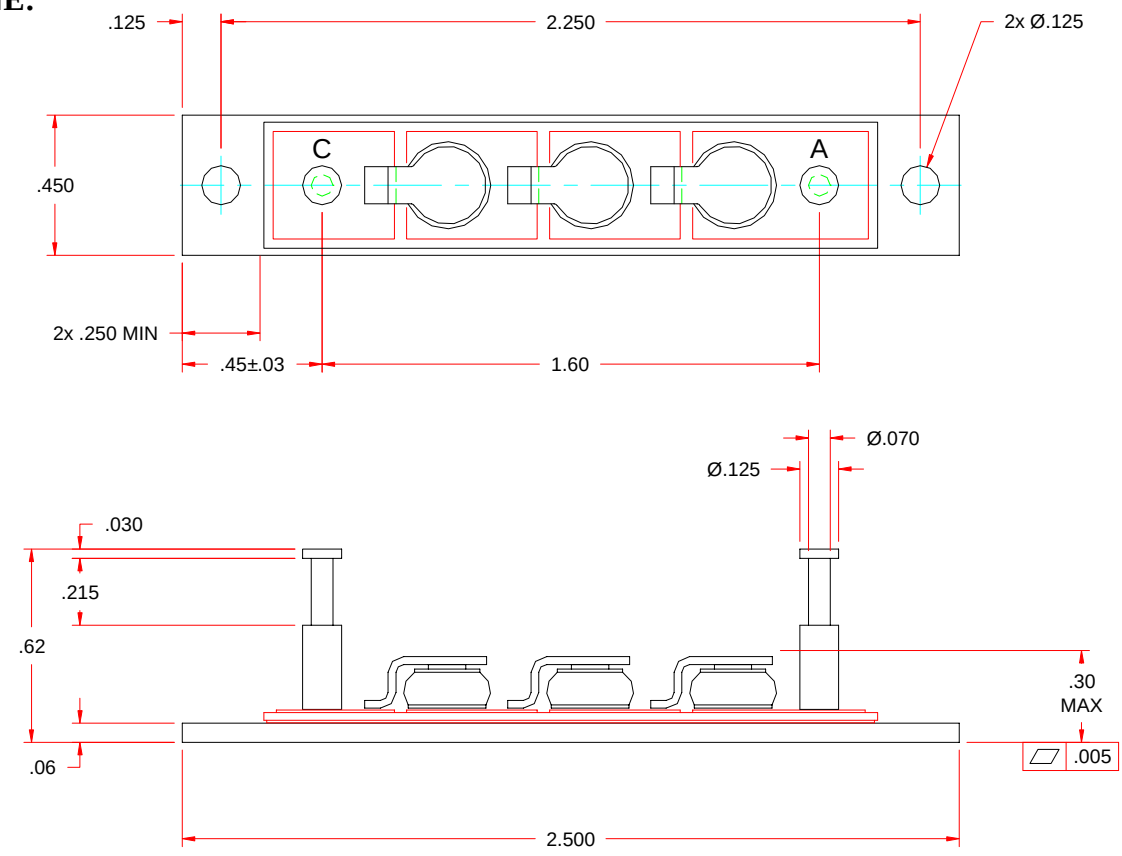

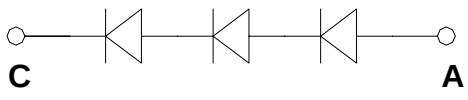

Tolerances:
(Unless specified):
.XX ±.03
.XXX ±.010