# ISDN S INTERFACE ISOLATION TRANSFORMERS

## FEATURES

❶ Designed for Isolation between Line Card and Terminal
❷ Meets Pulse Waveform Template of CCITT 1.430
❸ Excellent Longitudinal Balance
❹ 2000Vrms Minimum Isolation
❺ Industry Standard Packages
❻ Single or Dual Core Package

## ELECTRICAL SPECIFICATIONS AT 25°C PER CORE

| PART NUMBER | TURNS RATIO (±2%) | PRIMARY OCL (mH Min.) | SECONDARY $L_L$ (µH Max.) | PRI-SEC Cw/w (pf Max.) | PRIMARY $C_P$ (pf Max.) | PRIMARY DCR (Ohms Max.) | SECONDARY DCR (Ohms Max.) | Package & Schematic |
|---|---|---|---|---|---|---|---|---|
| PM-IS01 | 1:1 | 22 | 5 | 100 | 40 | 2.4 | 2.4 | A |
| PM-IS02 | 1:1.8 | 22 | 15 | 100 | 140 | 2.4 | 4.2 | B |
| PM-IS03 | 1:2 | 22 | 15 | 100 | 80 | 2.4 | 4.0 | A |
| PM-IS04 | 1:2.5 | 22 | 30 | 100 | 150 | 2.4 | 5.8 | B |
| PM-IS05 | 1:2.5 | 22 | 25 | 100 | 50 | 2.4 | 5.8 | A |
| PM-IS06 | 1:2 | 22 | 12 | 100 | 150 | 2.4 | 5.0 | A |
| | | | | | | | | |
| PM-IS07 | 1:1 | 22 | 5 | 100 | 40 | 2.4 | 2.4 | C |
| PM-IS08 | 1:1.8 | 22 | 15 | 100 | 140 | 2.4 | 4.2 | C |
| PM-IS09 | 1:2 | 22 | 15 | 100 | 80 | 2.4 | 4.0 | C |
| PM-IS10 | 1:2.5 | 22 | 30 | 100 | 150 | 2.4 | 5.8 | C |
| PM-IS11 | 1:2.5 | 22 | 25 | 100 | 50 | 2.4 | 5.8 | C |
| PM-IS12 | 1:2 | 22 | 12 | 100 | 150 | 2.4 | 5.0 | C |

### DUAL CORE PACKAGE "C"

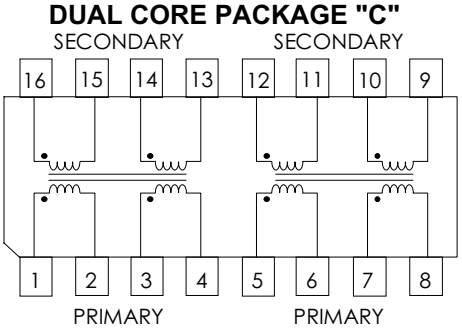


**NOTE FOR PIN-OUT "C"**
Primary:1 to 4 & 5 to 8
Secondary: 16 to 13 & 12 to 9

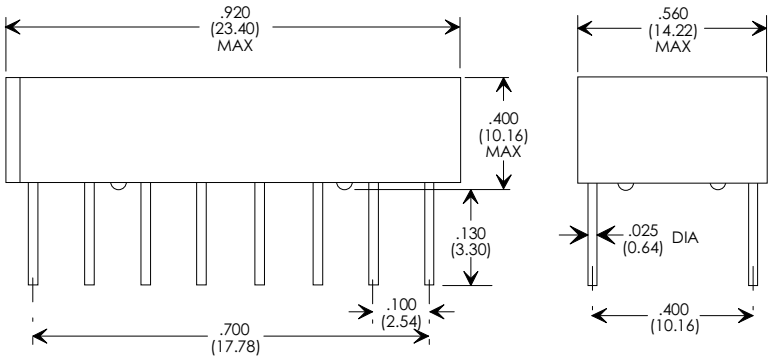


### SINGLE CORE PACKAGE "A"

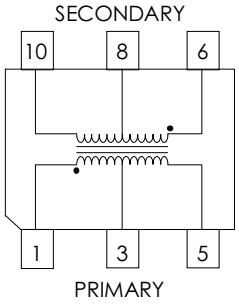


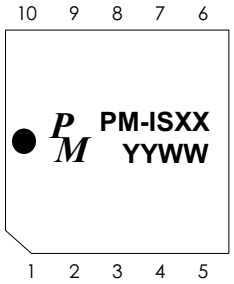


**NOTES:**
Unused Pins are ommitted

### SINGLE CORE PACKAGE "B"

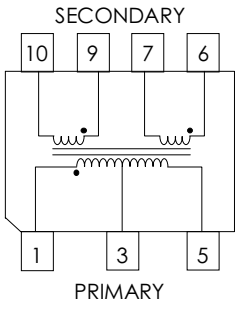


**NOTE FOR PIN-OUT "B"**
Primary:1 to 3
Secondary: 4 to 7
Center tap is 6 connect to 5

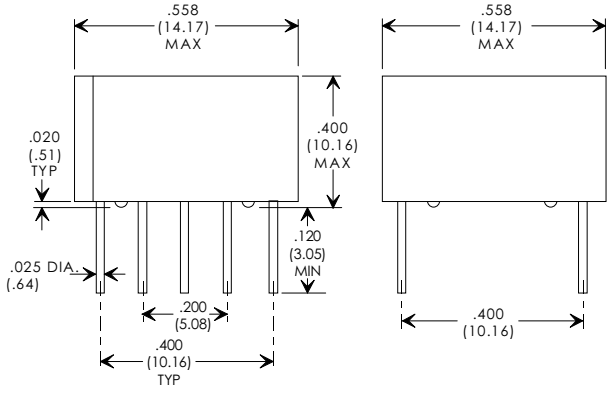


UNUSED PINS ARE OMITTED

Specifications subject to change without notice.



Premier Magnetics Inc.
27111 Aliso Creek Road, Suite 175
Aliso Viejo, California 92656
Phone: (714) 362-4211
Fax: (714) 362-4212