POLYMER PTC DEVICE

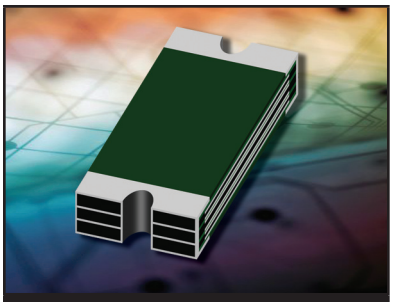

PTC DEVICE

DESCRIPTION

Surface mount PTC devices are the preferred over-current protection method for computer, consumer electronic, portable electronics and automotive applications. These devices are suitable for automated assembly and are designed to save on board space.

FEATURES

- Resettable Over-Current Protection
- Very Low Resistance
- High Current Rating
- Small Footprint of 1206
- Fast Time-to-Trip
- Lead-Free Solder Termination
- RoHS & REACH Compliant

APPLICATIONS

- Mobile Phone Battery Packs
- Cordless Phone Battery Packs
- Mobile Radio Packs
- Computer Battery Packs
- Camcorder Battery Packs
- SMART Phone Battery Packs
- Computer Motherboards

MECHANICAL CHARACTERISTICS

- Surface Mount Device: Size 1210
- Approximate Weight: 0.0164 grams
- Lead-Free
- 8mm Tape and Reel Per EIA Standard 481

ENVIRONMENTAL SPECIFICATIONS

- Recommended Storage Conditions: 40°C to 85°C
- Passive Aging: 85°C, 1000 Hours
- Moisture Resistance: 85% RH, 85°C, 1000 Hours
- Thermal Shock: -40°C to 85°C, 30 Minute Cycle, 20 Cycles
- Solder Leach Resistance and Terminal Adhesion: Per EIA-576 Test

TYPICAL DEVICE CHARACTERISTICS

ELECTRICAL SPECIFICATIONS @ 25°C										
PART NUMBER	MARKING CODE	HOLDING CURRENT I_H AMPS	TRIP CURRENT I_T AMPS	OPERATING VOLTAGE V_{DC} VOLTS	INTERRUPT CURRENT I_{MAX} AMPS	MAXIUM TIME-TO-TRIP @5 I_HA T_{TRIP} Seconds	MAXIMUM TRIPPED STATE POWER DISSIPATION @6V P_D WATTS	REFERENCE RESISTANCE (Note 1) R OHMS MIN	REFERENCE RESISTANCE (Note 1) R OHMS TYP	MAXIMUM TWO HOURS POST REFLOW RESISTANCE R OHMS
PLRO1206-300	?	3.0	6.0	6	50	4.0	1.0	0.003	0.008	0.020
PLRO1206-380	L	3.0	8.0	6	50	4.0	1.0	0.002	0.006	0.018

NOTES
1. The maximum resistance of two hours post reflow is a reference value. The value may change a little according to reflow conditions and soldering state.

THERMAL DERATING CHART - IH(A)								
PART NUMBER	-40°C	-20°C	0°C	25°C	40°C	50°C	60°C	70°C
PLRO1206-300	4.8	4.2	3.6	3.0	2.5	2.2	2.0	1.6
PLRO1206-380	5.4	4.8	4.0	3.8	3.0	2.5	2.2	1.7

PACKAGE OUTLINE AND PAD LAYOUT INFORMATION

OUTLINE DIMENSIONS				
DIM	MILLIMETERS		INCHES	
	MIN	MAX	MIN	MAX
A	3.00	3.40	0.12	0.14
B	1.50	1.80	0.06	0.07
C	1.00		0.04	
D	0.25	0.75	0.01	0.03
E	0.05	0.45	0.002	0.018

NOTES
1. Dimensions are exclusive of mold flash and metal burrs.

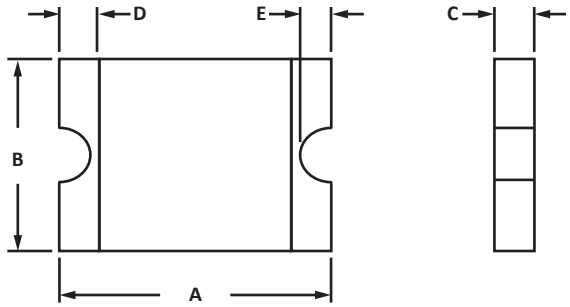

OUTLINE DIMENSIONS		
DIM	MILLIMETERS	INCHES
	NOM	NOM
F	1.80	0.07
G	1.00	0.04
H	1.80	0.07

NOTES
1. Dimensions are exclusive of mold flash and metal burrs.

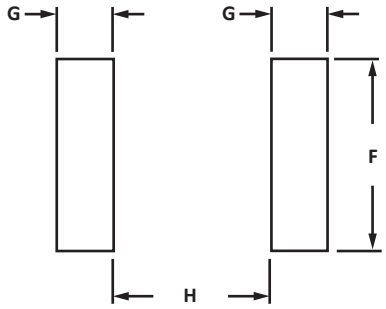

TAPE AND REEL

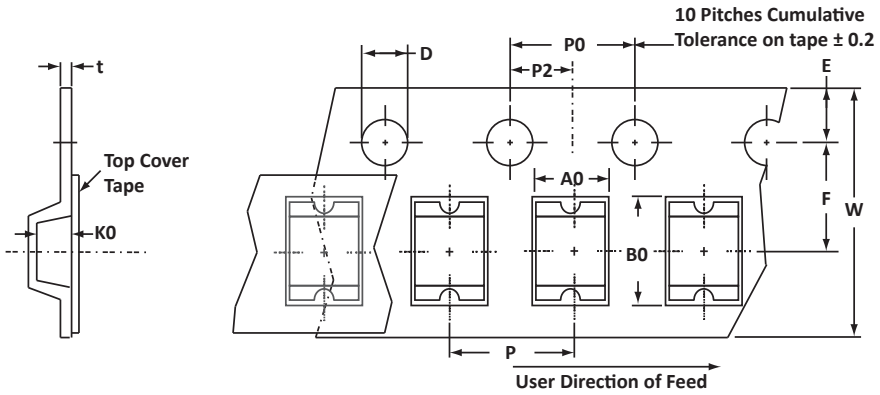

SPECIFICATIONS												
REEL DIA.	TAPE WIDTH	A0	B0	K0	D	E	F	W	P0	P2	P	t
178mm (7")	8mm	1.77 ± 0.10	3.40 ± 0.10	0.90 ± 0.10	1.55 ± 0.05	1.75 ± 0.10	3.50 ± 0.10	8.00 ± 0.20	4.00 ± 0.10	2.00 ± 0.05	4.00 ± 0.10	0.22±0.05

NOTES
1. Dimensions are in millimeters.
2. Surface mount product is taped and reeled in accordance with EIA-481.
3. Suffix - T7 = 7" Reel - 4,000 pieces per 8mm tape.
4. Marking on Part - marking code.

ORDERING INFORMATION					
BASE PART NUMBER	LEADFREE SUFFIX	TAPE SUFFIX	QTY/REEL	REEL SIZE	TUBE QTY
PLRO1206-xxx	N/A	-T7	4,000	7"	N/A
This device is only available in a Lead-Free configuration.					

COMPANY INFORMATION

COMPANY PROFILE

In business more than 20 years, ProTek Devices™ is a privately held semiconductor company. The company offers a product line of overvoltage protection and overcurrent protection components. These include transient voltage suppressor array (TVS arrays) avalanche breakdown diode, steering diode TVS array and electronics SMD chip fuses. These components deliver circuit protection in electronic systems from numerous overvoltage and overcurrent events. They include lightning; electrostatic discharge (ESD); nuclear electromagnetic pulses (NEMP); inductive switching; and electromagnetic interference (EMI) / radio frequency interference (RFI). ProTek Devices also offers high performance interface and linear products. They include analog switches; multiplexers; LED drivers; LED wafer die for ESD protection; audio control ICs; RF and related high frequency products.

CONTACT US

Corporate Headquarters
2929 South Fair Lane
Tempe, Arizona 85282
USA

By Telephone
General: 602-431-8101
Sales: & Marketing: 602-414-5109
Customer Service: 602-414-5114
Product Technical Support: 602-414-5107

By Fax
General: 602-431-2288

By E-mail:
Sales: sales@protekdevices.com
Customer Service: service@protekdevices.com
Technical Support: support@protekdevices.com

ProTek Devices (Asia Pacific) Pte. Ltd.
8 Ubi Road 2, #06-19
Zervex
Singapore - 408538
Tel: +65-67488312
Fax: +65-67488313

Web
www.protekdevices.com

COPYRIGHT © ProTek Devices 2013 - This literature is subject to all applicable copyright laws and is not for resale in any manner.

SPECIFICATIONS: ProTek reserves the right to change the electrical and or mechanical characteristics described herein without notice.

DESIGN CHANGES: ProTek reserves the right to discontinue product lines without notice and that the final judgement concerning selection and specifications is the buyer's and that in furnishing engineering and technical assistance. ProTek assumes no responsibility with respect to the selection or specifications of such products. ProTek makes no warranty, representation or guarantee regarding the suitability of its products for any particular purpose, nor does ProTek assume any liability arising out of the application or use of any product or circuit and specifically disclaims any and all liability without limitation special, consequential or incidental damages.

LIFE SUPPORT POLICY: ProTek Devices products are not authorized for use in life support systems without written consent from the factory.