Low Phase Noise PLL Clock Multiplier

FEATURES

- Full swing CMOS outputs with 25 mA drive capability at TTL levels.
- Reference 20-30MHz crystal or clock.
- Integrated crystal load capacitor: no external load capacitor required.
- Output clocks up to 150MHz at 3.3V.
- Low phase noise (-126dBc/Hz @ 1kHz).
- Output Enable function.
- Low jitter (RMS): 6.4ps (period), 9.4ps (accum.)
- Advanced low power sub-micron CMOS process.
- 3.3V operation.
- Available in 8-Pin SOIC or TSSOP.

PIN CONFIGURATION

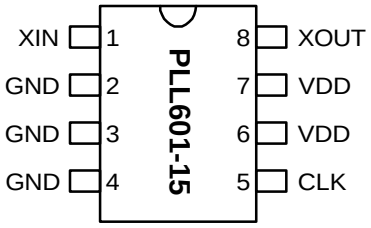

CRYSTAL RANGE

Multiplier	Xtal range
5x	20-30MHz

DESCRIPTIONS

The PLL601-15 is a low cost, high performance and low phase noise clock synthesizer. It implements PhaseLink's proprietary analog and digital Phase Locked Loop techniques for a fixed 5x multiplier. The chip accepts crystal or clock inputs ranging from 20 to 30MHz, and produces outputs clocks up to 150MHz at 3.3V.

BLOCK DIAGRAM

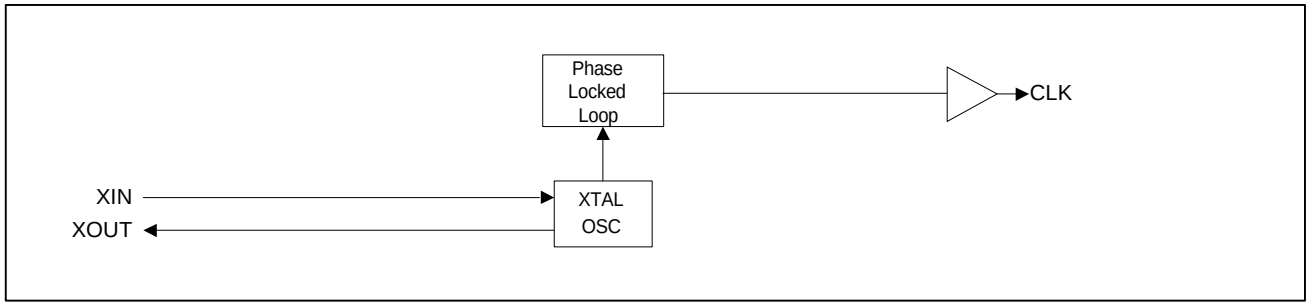

PIN DESCRIPTIONS

Name	Number	Type	Description
CLK	5	O	Clock output from VCO. Equals the input frequency times multiplier.
VDD	7,6	P	3.3V Power Supply.
XIN	1	I	Crystal input to be connected to 20-30MHz fundamental parallel mode crystal (C_L=15pF). On chip load capacitors: No external capacitor required.
XOUT	8	O	Crystal Connection.
GND	2, 3,4	P	Ground.

ELECTRICAL SPECIFICATIONS

1. Absolute Maximum Ratings

PARAMETERS	SYMBOL	MIN.	MAX.	UNITS
Supply Voltage Range	V_{CC}	-0.5	7	V
Input Voltage Range	V_I	-0.5	V_{CC}+0.5	V
Output Voltage Range	V_O	-0.5	V_{CC}+0.5	V
Soldering Temperature			260	°C
Storage Temperature	T_S	-65	150	°C
Ambient Operating Temperature		0	70	°C

Exposure of the device under conditions beyond the limits specified by Maximum Ratings for extended periods may cause permanent damage to the device and affect product reliability. These conditions represent a stress rating only, and functional operations of the device at these or any other conditions above the operational limits noted in this specification is not implied.

2. AC Specification

PARAMETERS	CONDITIONS	MIN.	TYP.	MAX.	UNITS
Input Frequency		20		30	MHz
Output Frequency	At 3.3V			150	MHz
Output Rise Time	0.8V to 2.0V with no load			1.5	ns
Output Fall Time	2.0V to 0.8V with no load			1.5	ns
Duty Cycle	At VDD/2	45	50	55	%
Period jitter RMS	With capacitive decoupling between VDD and GND		6.4		ps
Accumulated jitter RMS	With capacitive decoupling between VDD and GND		9.4		ps
Phase Noise, relative to carrier, 150Mhz(x5)	100Hz offset, 3.3V		-103		dBc/Hz
Phase Noise, relative to carrier, 150Mhz(x5)	1kHz offset, 3.3V		-126		dBc/Hz
Phase Noise, relative to carrier, 150Mhz(x5)	10kHz offset, 3.3V		-133		dBc/Hz
Phase Noise, relative to carrier, 150Mhz(x5)	100kHz offset, 3.3V		-128		dBc/Hz

3. DC Specification

PARAMETERS	SYMBOL	CONDITIONS	MIN.	TYP.	MAX.	UNITS
Operating Voltage	VDD		3.135		3.465	V
Input High Voltage	V_{IH}		2			V
Input Low Voltage	V_{IL}				0.8	V
Input High Voltage	V_{IH}	For XIN pin	(VDD/2) + 1	VDD/2		V
Input Low Voltage	V_{IL}	For XIN pin		VDD/2	(VDD/2) – 1	V
Output High Voltage	V_{OH}	I_{OH} = -25mA	2.4			V
Output Low Voltage	V_{OL}	I_{OL} = 25mA			0.4	V
Output High Voltage At CMOS Level	V_{OH}	I_{OH} = -8mA	VDD-0.4			V
Operating Supply Current	I_{DD}	No Load		35		mA
Short-circuit Current	I_S			±120		mA

4. Crystal Specifications

PARAMETERS	SYMBOL	CONDITIONS	MIN.	TYP.	MAX.	UNITS
Crystal Resonator Frequency	F_{XIN}	Parallel Fundamental Mode	20		30	MHz
Crystal Loading Capacitance Rating	$C_{L\ (xtal)}$			15		pF

PACKAGE INFORMATION

8 PIN (dimensions in mm)

	Narrow SOIC		TSSOP	
Symbol	Min.	Max.	Min.	Max.
A	1.47	1.73	-	1.20
A1	0.10	0.25	0.05	0.15
B	0.33	0.51	0.19	0.30
C	0.19	0.25	0.09	0.20
D	4.80	4.95	2.90	3.10
E	3.80	4.00	4.30	4.50
H	5.80	6.20	6.20	6.60
L	0.38	1.27	0.45	0.75
e	1.27 BSC		0.65 BSC	

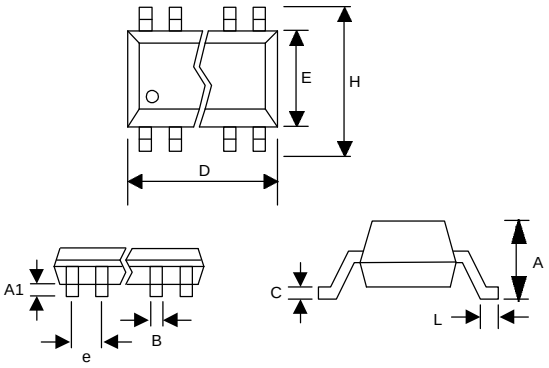

ORDERING INFORMATION

For part ordering, please contact our Sales Department:

47745 Fremont Blvd., Fremont, CA 94538, USA

Tel: (510) 492-0990 Fax: (510) 492-0991

PART NUMBER

The order number for this device is a combination of the following:
Device number, Package type and Operating temperature range

PLL601-15 X C

PART NUMBER

TEMPERATURATURE
C=COMMERCIAL
M=MILITARY
I=INDUSTRAL

PACKAGE TYPE
S=SOIC, O=TSSOP

PhaseLink Corporation, reserves the right to make changes in its products or specifications, or both at any time without notice. The information furnished by Phaselink is believed to be accurate and reliable. However, PhaseLink makes no guarantee or warranty concerning the accuracy of said information and shall not be responsible for any loss or damage of whatever nature resulting from the use of, or reliance upon this product.

LIFE SUPPORT POLICY: PhaseLink's products are not authorized for use as critical components in life support devices or systems without the express written approval of the President of PhaseLink Corporation.