Three Terminal Low Current Negative Voltage Regulators

TO-92

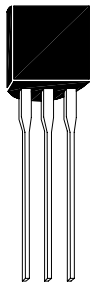

PL79L12XA3

Description

The PL79L12XA3 is an inexpensive, easy-to-use device suitable for numerous applications requiring up to 100mA. Like the higher powered PL7900E3 series negative regulators, this device features thermal shutdown and current limiting, making it remarkably rugged. In most applications, no external components are required for operation.

The PL79L12A3 device is useful for on-card regulation or any other application where a regulated negative voltage at a modest current level is needed. This regulator offers substantial advantage over the common resistor/zener diode approach.

- No external components required
- Internal short circuit current limiting
- Internal thermal overload protection
- Low cost
- Complementary positive regulators offered(PL78L12A3)
- Available in either ±3% or ±5% selection.

Absolute Maximum Ratings (Ta=25°C)

- Input Voltage.....-35V
- Total Power Dissipation..... Internally limited
- Operating Temperature Range..... 0 °C to +125 °C
- Maximum Junction Temperature.....+150 °C
- Storage Temperature Range.....-55 °C to +150 °C
- Lead Temperature (Soldering 10S)..... .....260 °C

Typical Application

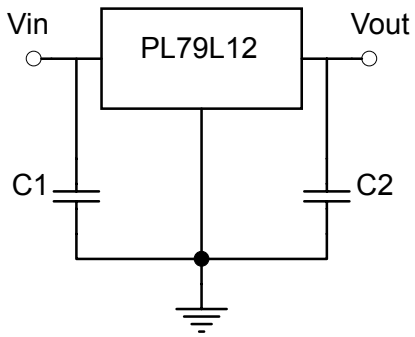

Note:
C1 and C2 are required if regulator is located far from power supply filter and load, or oscillation may induced on the loop.

Representative Schematic Diagram

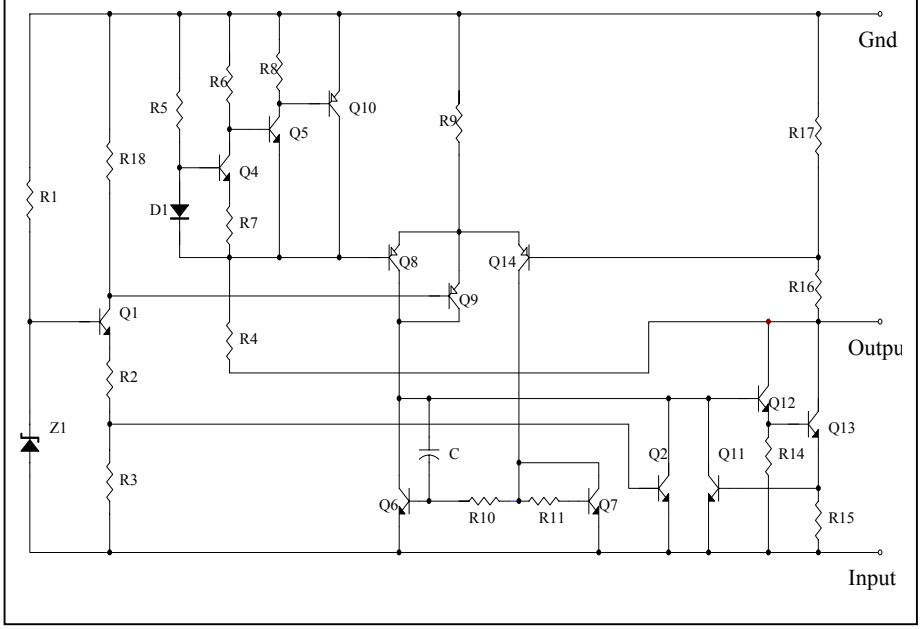

Ordering Information

Device	Output Voltage Tolerance
PL79L12AA3	3%
PL79L12BA3	5%

Electrical Characteristics

Vin=-19V, Iout=40mA, 0°C≤Tj≤125°C, Cin=0.33uF, Cout=0.1uF (unless otherwise noted)

Symbol	Parameter	Conditions	PL79L12A			Units
			Min	Typ	Max	
Vo	Output Voltage	Tj=25°C	-11.64	-12.00	-12.36	V
		1mA≤Io≤70mA	-11.6	-	-12.4	
		1mA≤Io≤40mA and -14.5V≥Vin≥-27V	-11.6	-	-12.4	
ΔVo	Line Regulation	Tj=25°C, -14.5V≥Vin≥-27V	-	-	250	mV
		Tj=25°C, -16V≥Vin≥-27V	-	-	200	
ΔVo	Load Regulation	Tj=25°C, 1mA≤Io≤100mA	-	-	100	mV
		Tj=25°C, 1mA≤Io≤40mA	-	-	50	
IQ	Quiescent Current	Tj=25°C	-	-	6.5	mA
		Tj=125°C	-	-	6.0	
ΔIQ	Quiescent Current Change	1mA≤Io≤40mA	-	-	0.2	mA
		-16V≥Vin≥-27V	-	-	1.5	
Vn	Output Noise Voltage	Ta=25°C, 10Hz≤f≤100KHz	-	80	-	μV
ΔVin / ΔVout	Ripple Rejection	-15V≥Vin≥-25V, f=120Hz	37	42	-	dB
VD	Dropout Voltage	Tj=25°C,Iout=40mA	-	1.7	-	V

Symbol	Parameter	Conditions	PL79L05B			Units
			Min	Typ	Max	
Vo	Output Voltage	Tj=25°C	-11.52	-12.00	-12.48	V
		1mA≤Io≤70mA	-11.4	-	-12.6	
		1mA≤Io≤40mA and -14.5V≥Vin≥-27V	-11.4	-	-12.6	
ΔVo	Line Regulation	Tj=25°C, -14.5V≥Vin≥-27V	-	-	250	mV
		Tj=25°C, -16V≥Vin≥-27V	-	-	200	
ΔVo	Load Regulation	Tj=25°C, 1mA≤Io≤100mA	-	-	100	mV
		Tj=25°C, 1mA≤Io≤40mA	-	-	50	
IQ	Quiescent Current	Tj=25°C	-	-	6.5	mA
		Tj=125°C	-	-	6.0	
ΔIQ	Quiescent Current Change	1mA≤Io≤40mA	-	-	0.2	mA
		-16V≥Vin≥-27V	-	-	1.5	
Vn	Output Noise Voltage	Ta=25°C, 10Hz≤f≤100KHz	-	80	-	μV
ΔVin / ΔVout	Ripple Rejection	-15V≥Vin≥-25V, f=120Hz	37	42	-	dB
VD	Dropout Voltage	Tj=25°C,Iout=40mA	-	1.7	-	V

TO-92 Dimension

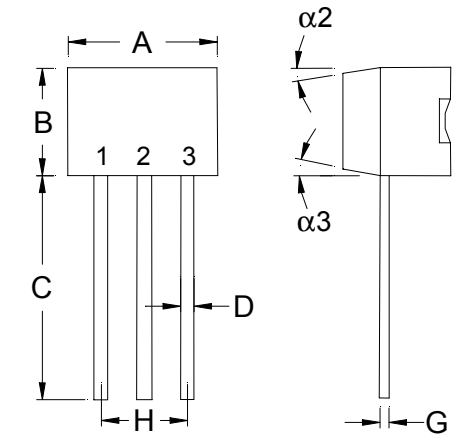

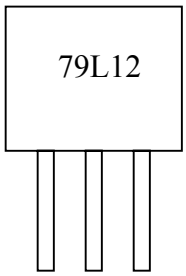

Style: Pin 1.GND 2.Vin 3.Vout

3-Lead TO-92 Plastic Package
CYStek Package Code: A3

*: Typical

DIM	Inches		Millimeters		DIM	Inches		Millimeters	
	Min.	Max.	Min.	Max.		Min.	Max.	Min.	Max.
A	0.1704	0.1902	4.33	4.83	G	0.0142	0.0220	0.36	0.56
B	0.1704	0.1902	4.33	4.83	H	-	*0.1000	-	*2.54
C	0.5000	-	12.70	-	I	-	*0.0500	-	*1.27
D	0.0142	0.0220	0.36	0.56	α1	-	*5°	-	*5°
E	-	*0.0500	-	*1.27	α2	-	*2°	-	*2°
F	0.1323	0.1480	3.36	3.76	α3	-	*2°	-	*2°

Notes: 1.Controlling dimension: millimeters.
2.Maximum lead thickness includes lead finish thickness, and minimum lead thickness is the minimum thickness of base material.
3.If there is any question with packing specification or packing method, please contact your local CYStek sales office.

Material:

- Lead: 42 Alloy ; solder plating
- Mold Compound: Epoxy resin family, flammability solid burning class: UL94V-0

Important Notice:

- All rights are reserved. Reproduction in whole or in part is prohibited without the prior written approval of CYStek.
- CYStek reserves the right to make changes to its products without notice.
- CYStek ***semiconductor products are not warranted to be suitable for use in Life-Support Applications, or systems.***
- CYStek assumes no liability for any consequence of customer product design, infringement of patents, or application assistance.