PL611-01

Programmable Quick Turn Clock™

FEATURES

- Advanced programmable PLL design
- Very low Jitter and Phase Noise (30-70ps Pk-Pk typical)
- Up to 3 programmable outputs
- Output frequency up to 200MHz CMOS.
- Accepts Crystal or reference clock inputs
  - Fundamental crystal: 10MHz-30MHz
  - 3RD overtone crystal: Up to 75MHz
  - Reference input: Up to 200MHz
- Accepts <1.0V reference signal input voltage
- One programmable I/O pin can be configured as Programmable clock, or Frequency Selection input, or output Enable (OE) or Power Down (PDB) input.
- Single 2.5V or 3.3V ± 10% power supply
- Operating temperature range from -40°C to 85°C
- Available in 8-pin MSOP/SOIC, and 6-pin SOT Green/ RoHS compliant Packages

PIN CONFIGURATION

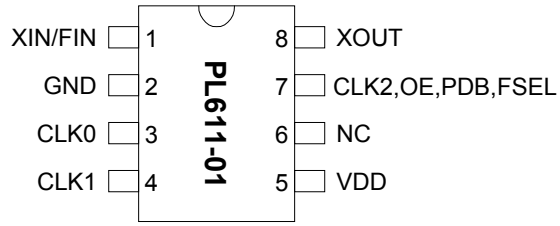

SOP-8
MSOP-8

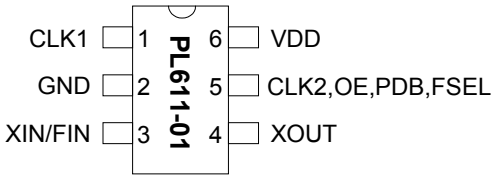

SOT-6

DESCRIPTION

The PL611-01 is a low-cost general purpose frequency synthesizer and a member of PhaseLink's Factory Programmable 'Quick Turn Clock (QTC)' family. PhaseLink's PL611-01 product family offers the versatility of using a single Crystal or Reference Clock input and producing up to three different system clocks. They can generate any output frequency up to 200 MHz from fundamental crystal input between 10 MHz - 30 MHz, or a 3rd overtone crystal of up to 75Mhz, or a Reference clock input of up to 200 MHz. Cascading of the ICs to produce additional clock frequencies is also supported.

BLOCK DIAGRAM

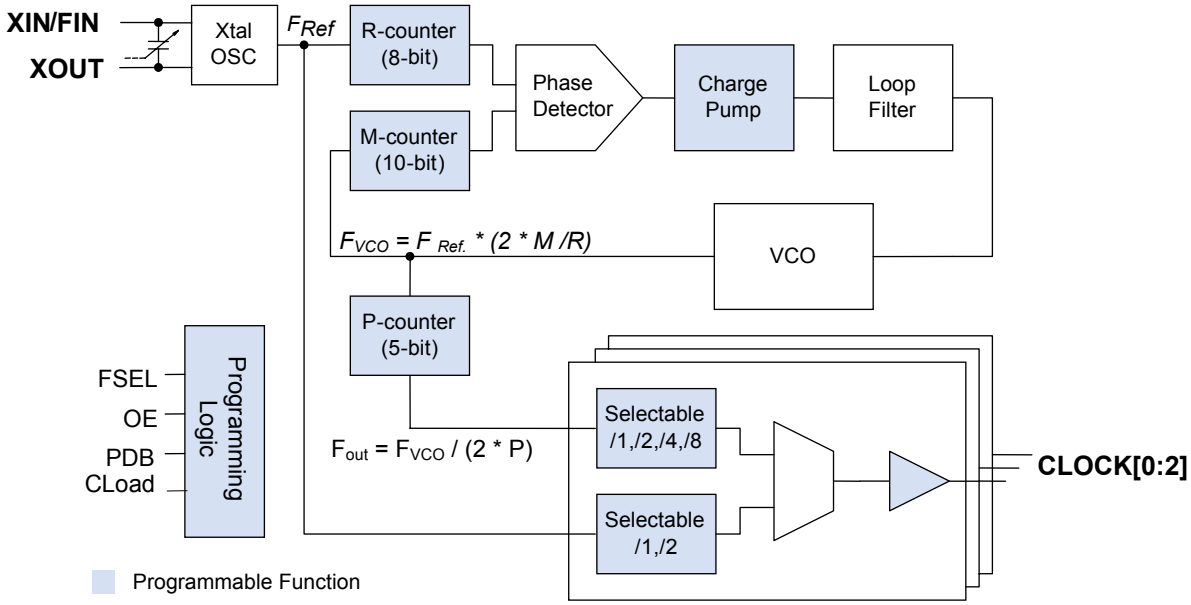

KEY PROGRAMMING PARAMETERS

CLK[0:2] Output Frequency	Output Drive Strength	Crystal Load	Programmable Input/Output	Charge-Pump Current
Fout = FIN * M / (R * P) where M=10 bit R= 8 bit P= 5 bit 1. CLK[0:2]= Fout/[1,2,4,8] 2. CLK[0:2]= FIN or FIN/2	Std: 10mA (default) High: 24mA	+/- 200ppm tuning.	One output pin can be configured as 1. CLK2 - output 2. FSEL - input 3. OE - input 4. PDB - input	4 levels of pump current settings

PIN DESCRIPTION

Name	Pin #		Type	Description
	MSOP-8 SOIC-8	SOT-23		
XIN/FIN	1	3	I	Crystal or Reference input pin
GND	2	2	P	GND connection
CLK[0:1]	3,4	1	O	Programmable Clock Output
VDD	5	6	P	VDD connection (2.25~3.63V)
NC	6			No Connect
CLK2, OE, PDB, FSEL	7	5	B	This programmable I/O pin can be configured as a programmable clock output (CLK2), or Output Enable (OE) input, or Power Down input (PDB), or Frequency Selection (FSEL) input pin. This pin has an internal 60KΩ pull up resistor.
XOUT	8	4	O	Crystal output pin

State	OE	PDB	FSEL
0	Tristate CLK[0:1]	Power Down Mode	Select Freq. '1'
1 (default)	Normal mode	Normal mode	Select Freq. '2'

ELECTRICAL SPECIFICATIONS

ABSOLUTE MAXIMUM RATINGS

PARAMETERS	SYMBOL	MIN.	MAX.	UNITS
Supply Voltage Range	V_{DD}	-0.5	4.6	V
Input Voltage Range	V_I	-0.5	V_{DD}+0.5	V
Output Voltage Range	V_O	-0.5	V_{DD}+0.5	V
Soldering Temperature (Green package)			260	°C
Data Retention @ 85°C		10		Year
Storage Temperature	T_S	-65	150	°C
Ambient Operating Temperature		-40	85	°C

Exposure of the device under conditions beyond the limits specified by Maximum Ratings for extended periods may cause permanent damage to the device and affect product reliability. These conditions represent a stress rating only, and functional operations of the device at these or any other conditions above the operational limits noted in this specification is not implied.

AC SPECIFICATIONS

PARAMETERS	CONDITIONS	MIN.	TYP.	MAX.	UNITS
Crystal Input Frequency(XIN)	Fundamental Crystal	10		30	MHz
	3rd Overtone Crystal			75	MHz
Input (FIN) Frequency				200	MHz
Input (FIN) Signal Amplitude	Internally AC coupled	0.9		VDD	Vpp
PLL Settling Time	After Crystal Start Up (Crystal Input)			100	µs
	After Reference Input Present (FIN)			100	µs
Output Rise Time	15pF Load, 10/90%VDD, Standard drive		2.5	3.5	ns
	15pF Load, 10/90%VDD, High drive		1.0	1.5	ns
Output Fall Time	15pF Load, 90/10%VDD, Standard drive		2.5	3.5	ns
	15pF Load, 90/10%VDD, High drive		1.0	1.5	ns
Duty Cycle	At VDD/2	45	50	55	%
Max. output skew between same frequency clocks	Equal loading (15 pF). Equal frequency & drive strength			500	ps
Period Jitter, peak-to-peak* (measured from 10,000 samples)	With capacitive decoupling between VDD and GND. Operating only one output.		70		ps

* Note: Jitter performance depends on the programming parameters.

DC SPECIFICATIONS

PARAMETERS	SYMBOL	CONDITIONS	MIN.	TYP.	MAX.	UNITS
Supply Current, Dynamic, with Loaded Outputs	I_{DD}	At 10MHz, load=15pF (PDB=1)			15	mA
		PDB=0			5	µA
Operating Voltage	V_{DD}		2.25		3.63	V
Output Low Voltage	V_{OL}	I_{OL} = +4mA Standard drive			0.4	V
Output High Voltage	V_{OH}	I_{OH} = -4mA Standard drive	V_{DD} – 0.4			V
Output Current, Standard drive	I_{OSD}	V_{OL} = 0.4V, V_{OH} = 2.4V			10	mA
Output Current, High drive	I_{OHD}	V_{OL} = 0.4V, V_{OH} = 2.4V			24	mA
Short-circuit Current	I_S			±50		mA

CRYSTAL SPECIFICATIONS

PARAMETERS	SYMBOL	MIN.	TYP.	MAX.	UNITS
Fundamental Crystal Resonator Frequency	F_{XIN}	10		30	MHz
3rd Overtone Crystal Resonator Frequency	F_{XIN}			75	MHz
Crystal Loading Rating (The IC can be programmed for any value in this range.)	$C_{L\ (xtal)}$	5		20	pF
Maximum Sustainable Drive Level				500	µW
Operating Drive Level			100		µW
Crystal Shunt Capacitance	C0			6	pF
Effective Series Resistance, Fundamental, 10-30MHz	ESR			30	Ω
Effective Series Resistance, 3rd Overtone, 30-50MHz [CO< 4pF, C_L=(5pF)/(8pF)]	ESR			100/70	Ω
Effective Series Resistance, 3rd Overtone, 50-65MHz, [CO< 4pF, C_L=5pF(5pF)/(8pF)]	ESR			60/40	Ω
Effective Series Resistance, 3rd Overtone, 65-75MHz [CO< 4pF, C_L=(5pF)/(8pF)]	ESR			45/30	Ω

Note: A detailed crystal specification document is also available for this part

PACKAGE DRAWINGS (GREEN PACKAGE COMPLIANT)

MSOP 8L

Symbol	Dimension in MM	
	Min.	Max.
A	---	1.10
A1	0.05	0.15
A2	0.81	0.91
B	0.25	0.40
C	0.13	0.23
D	2.90	3.10
E	2.90	3.10
H	4.90 BSC	
L	0.445	0.648
e	0.65 BSC	

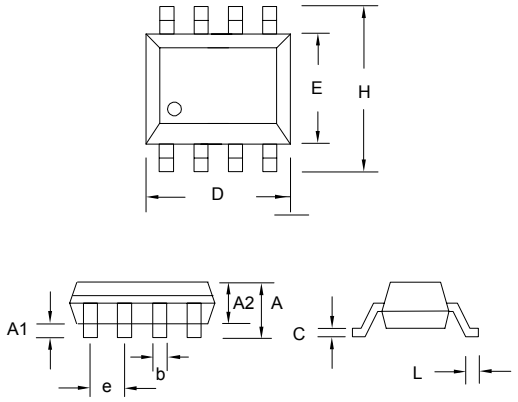

SOIC 8L

Symbol	Dimension in MM	
	Min.	Max.
A	1.35	1.75
A1	0.10	0.25
A2	1.25	1.50
B	0.33	0.53
C	0.19	0.27
D	4.80	5.00
E	3.80	4.00
H	5.80	6.20
L	0.40	0.89
e	1.27 BSC	

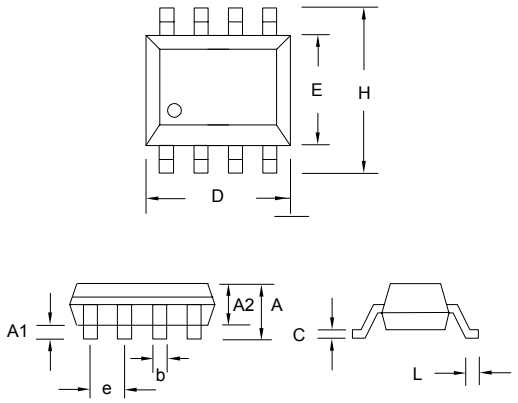

SOT-23 6 L

Symbol	Dimension in MM	
	Min.	Max.
A	1.05	1.35
A1	0.05	0.15
A2	1.00	1.20
B	0.30	0.50
C	0.08	0.20
D	2.80	3.00
E	1.50	1.70
H	2.60	3.0
L	0.35	0.55
e	0.95 BSC	

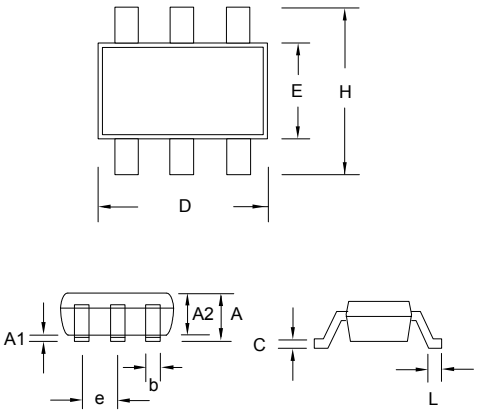

ORDERING INFORMATION

For part ordering, please contact our Sales Department:

47745 Fremont Blvd., Fremont, CA 94538, USA
Tel: (510) 492-0990 Fax: (510) 492-0991

PART NUMBER

The order number for this device is a combination of the following:
Device number, Package type and Operating temperature range

PL611-XXX X X-R

PART NUMBER

3 DIGIT ID Code *

PACKAGE TYPE
S=SOIC
M=MSOP
T=SOT

TEMPERATURE
C=COMMERCIAL
I = INDUSTRIAL

NONE= TUBE
R=TAPE and REEL

* PhaseLink will assign a unique 3-digit ID code for each approved programmed part number.
* PhaseLink offers Green Package Only for this product family.

Part / Order Number*	Marking	Package Option
PL611-01-XXXSC	C1XXX	8-Pin SOIC (Tube)
PL611-01-XXXSC-R	C1XXX	8-Pin SOIC (Tape and Reel)
PL611-01-XXXMC	C1XXX	8-Pin MSOP (Tube)
PL611-01-XXXMC-R	C1XXX	8-Pin MSOP (Tape and Reel)
PL611-01-XXXTC-R	C1XXX	6-Pin SOT-23 (Tape and Reel)

* Ordering will include Programming ID number that will be supplied at the time the samples are provided.

PhaseLink Corporation, reserves the right to make changes in its products or specifications, or both at any time without notice. The information furnished by Phaselink is believed to be accurate and reliable. However, PhaseLink makes no guarantee or warranty concerning the accuracy of said information and shall not be responsible for any loss or damage of whatever nature resulting from the use of, or reliance upon this product.

LIFE SUPPORT POLICY: PhaseLink's products are not authorized for use as critical components in life support devices or systems without the express written approval of the President of PhaseLink Corporation.