Bi-directional Digital I/O Board for Low Profile PCI

PIO-48D(LPCI)H



* Specifications, color and design of the products are subject to change without notice.

This product is a Low Profile size PCI bus-compliant interface board that extends the input/output function of bi-directional digital signal. This board has up to 48 unisolated TTL-level input/output channels that is powered by the equivalence to the mode 0 of i8255 chips, and you can use up to 48 channels of the input signals as interrupt inputs. You can select the input/output by the application software in eight signals units (in four signals unit for some inputs/outputs). Additionally, the digital filter function is equipped with this product.
Windows/Linux driver is bundled with this product.
Using the dedicated library VI-DAQ makes it possible to create each application for LabVIEW.

Features

This board can be used to TTL-level input/output 48 points bi-directional digital corresponding to to the equivalence to the i8255 mode 0.
This board has up to 48 unisolated TTL-level input/output channels whose response speed is 200nsec that is powered by to the equivalence to the mode 0 of i8255 device for general-purpose. You can select the input/output by the application software in eight signals units (in four signals unit for some inputs/outputs).

You can use up to 48channels of the input signals as interrupt events.
You can use up to 48channels of the input signals as interrupt events and also disable or enable the interrupt in bit units and select the edge of signals, at which to generate an interrupt.

This product has a digital filter function to prevent wrong recognition of input signals from carrying noise or a chattering.
This product has a digital filter function to prevent wrong recognition of input signals by noise or chattering is provided. All input terminals can be added a digital filter, and the setting can be performed by software.

Windows/Linux compatible driver libraries are attached.
Using the attached driver library API-PAC(W32) makes it possible to create applications of Windows/Linux. In addition, a diagnostic program by which the operations of hardware can be checked is provided.

Connectors are compatible with CardBus compatible card PIO-48D(CB)H.
The functions same with CardBus compatible card PIO-48D(CB)H are provided. In addition, as there is compatibility in terms of connector shape and pin assignments, it is easy to migrate from the existing system. When the DIO-68M/96F is used, connector shape and pin assignments is compatible with the PIO-48D(PCI).

Support for both of Low Profile and standard size slots
Support for both of Low Profile and standard size slots (interchangeable with a bundled bracket).

LabVIEW is supported by a plug-in of dedicated library VI-DAQ.
Using the dedicated library VI-DAQ makes it possible to create each application for LabVIEW.

Specification

Item		Specification
I/O		
	I/O format	Unisolated TTL-level I/O (Positive logic) *1
	Number of I/O channels	48 channels (all available for interrupts)
	Interrupt	48 interrupt input signals are arranged into a single output of interrupt signal INT. An interrupt is generated at the falling edge (HIGH-to-LOW transition) or rising edge (LOW-to-HIGH transition).
	Response time	Within 200nsec
	Rated output current	I_{OL}=24mA(Max.) I_{OH}=-15mA(Max.)
Common		
	Allowable distance of signal extension	Approx. 1.5m (depending on wiring environment)
	Interrupt level	1 level use
	Max. board count for connection	16 boards including the master board
	I/O address	Any 32-byte boundary (Common to I/O part)
	Power consumption	5VDC 600mA(Max.)
	Operating condition	0 - 50°C, 10 - 90%RH (No condensation)
	Bus specification	PCI (32bit, 33MHz, Universal key shapes supported *2)
	Physical dimensions (mm)	121.69(L) x 63.41 (H)
	Connector	68 pin 0.8mm pitch connector HDRA-F68LFDT+ [mfd. by HONDA TSUSHIN KOGYO CO., LTD.] or equivalent to it
	Weight	60g
Certification		RoHS,CE,VCCI

*1 Data “1” and “0” correspond to the High and Low levels, respectively.
*2 When the board No. is 7145, PCI bus specification is 32bit, 33MHz, 5V.

Board Dimensions

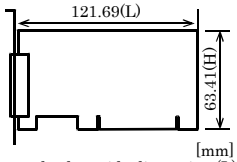

[mm]
The standard outside dimension (L) is the distance from the end of the board to the outer surface of the slot cover.

Support Software

Windows version of digital I/O driver API-DIO(98/PC) / API-DIO(WDM)
[Stored on the bundled Disk driver library API-PAC(W32)]

The API-DIO(98/PC) is the Windows version driver library software that provides products in the form of Win32 API functions (DLL). Various sample programs such as Visual Basic and Visual C++, etc and diagnostic program useful for checking operation is provided.
You can download the updated version from the CONTEC's Web site (http://www.contec.com/apipac/). For more details on the supported OS, applicable language and new information, please visit the CONTEC's Web site.

Linux version of digital I/O driver API-DIO(LNX)
[Stored on the bundled Disk driver library API-PAC(W32)]

The API-DIO(LNX) is the Linux version driver software which provides device drivers (modules) by shared library and kernel version. Various sample programs of gcc are provided.
You can download the updated version from the CONTEC's Web site (http://www.contec.com/apipac/). For more details on the supported OS, applicable language and new information, please visit the CONTEC's Web site.

Data acquisition VI library for LabVIEW VI-DAQ (Available for downloading (free of charge) from the CONTEC web site.)

This is a VI library to use in National Instruments LabVIEW. VI-DAQ is created with a function form similar to that of LabVIEW's Data Acquisition VI, allowing you to use various devices without complicated settings.
See http://www.contec.com/vidaq/ for details and download of VI-DAQ.

Cable & Connector

Cable (Option)

Shielded Cable for CardBusDigital I/O Card
: DIO-68M/96F (0.5m)

Cable with 68-Pin D-sub Connector
at either Ends (Mold Type) : PCB68PS-0.5P (0.5m)
: PCB68PS-1.5P (1.5m)

Shielded Cable
with One 68-Pin Connector : PCA68PS-0.5P (0.5m)
: PCA68PS-1.5P (1.5m)

Accessories

Accessories (Option)

Screw Terminal (M3 x 68)	: EPD-68A *1 *3
Screw Terminal (M3 x 96)	: EPD-96A *2 *3
Screw Terminal (M3.5 x 96)	: EPD-96 *2
Screw Terminal	: DTP-64(PC) *2

*1 PCB68PS-0.5P or PCB68PS-1.5P optional cable is required separately.
*2 DIO-68M/96F optional cable is required separately.
*3 "Spring-up" type terminal is used to prevent terminal screws from falling off.

* Check the CONTEC's Web site for more information on these options.

Packing List

Board [PIO-48D(LPCI)H] …1
First step guide … 1
Disk *1 [API-PAC(W32)] …1
Standard size bracket …1
Serial number label…1
Product Registration Card & Warranty Certificate…1

*1 The Disk contains the driver software and User's Guide.

Block Diagram

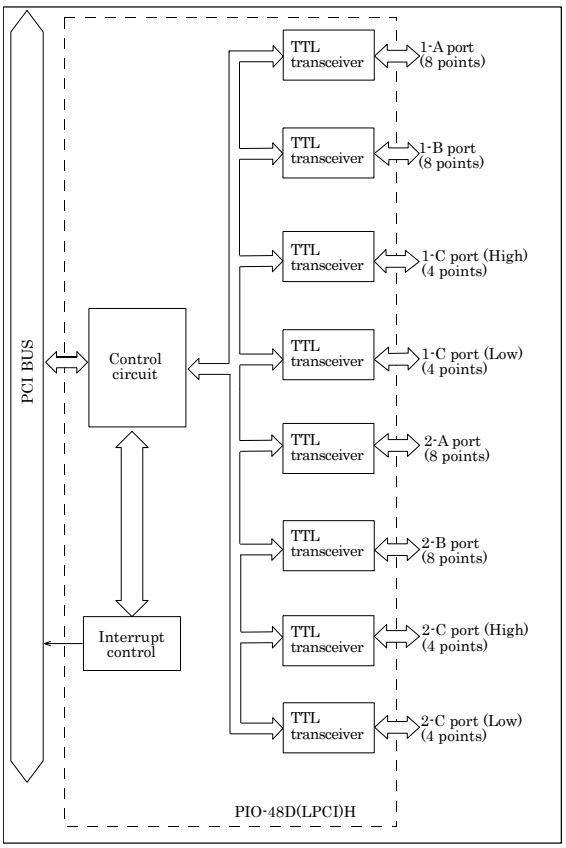

Using the On-board Connectors

Connecting a Device to a Connector

The optional connector cable (DIO-68M/96F or PCA68PS-**P, PCB68PS-**P) is used to connect the board to external devices. The cable is used together with a terminal block to connect external devices.

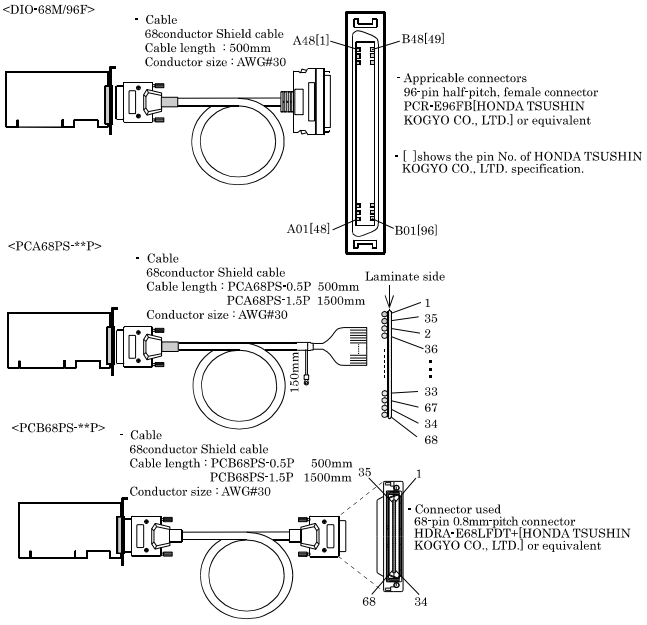

Connector Pin Assignment

Pin Assignments of Interface Connector for PIO-48D(LPCI)H

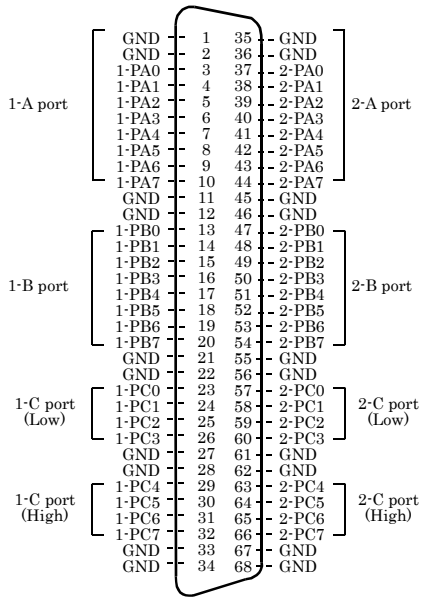

Signal assignment with the DIO-68/96F used

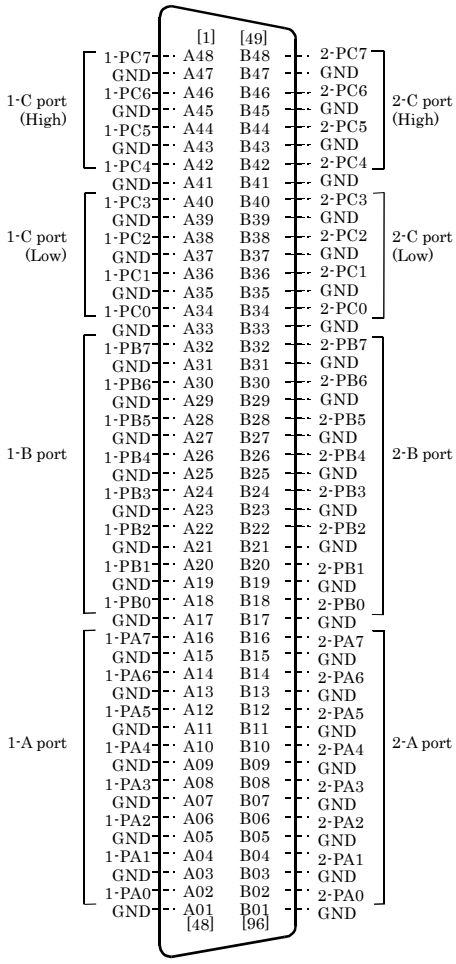

- [ ]shows the pin No. of HONDA TSUSHIN KOGYO CO., LTD. specification.

Connecting I/O Signals

The I/O circuits of interface blocks of this product are illustrated in the image below. Signals are TTL levels and positive logic. Each of the signal is pulled up.

I/O Circuit

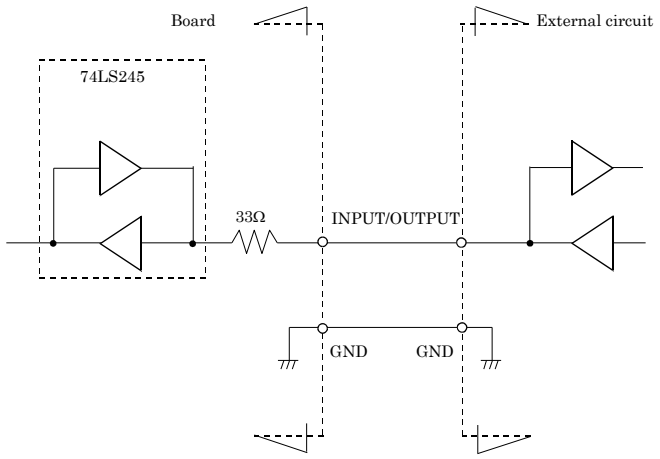

⚠ CAUTION

Take care not to short the outputs to digital ground as this may cause a fault.

If connecting pull-up resistors to the outputs, use a resistor of approximately 10kΩ and pull-up to the 5V power supply.

Example Connection 1 (Using DIO-68M/96F)

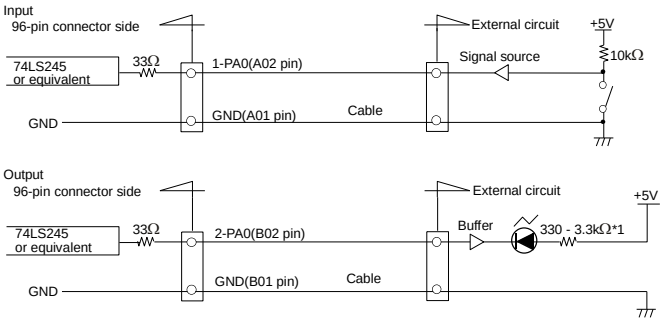

* Resistor value should be adjusted according to the specification of the LED to use and the desired intensity level.

Example Connection 2 (Using PCA68PS-**P, PCB68PS-**P)

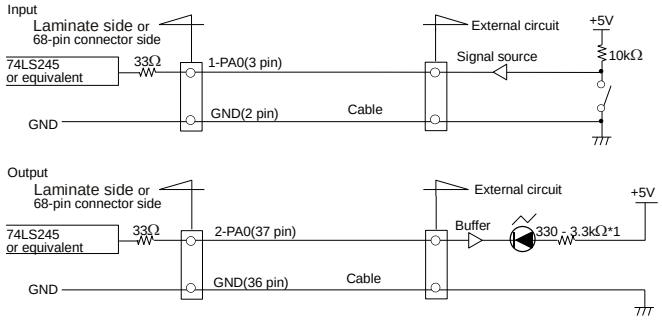

* Resistor value should be adjusted according to the specification of the LED to use and the desired intensity level.